Brand of NTN corporation

Technical data

USPFL205

Bearing units



Sheet metal housing, radial insert ball bearing with socket set screws, single lip seal

KIT CONTENT

US205G2, PFL205

VISUAL (S)

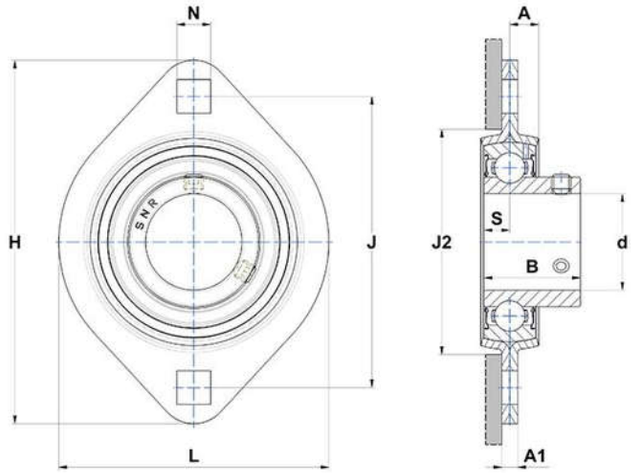

PRODUCT DEFINITION

Brand	SNR
A - Housing height	8,7 mm
A1 - Housing foot height / flange height	4 mm
A2 - Total height from mounting surface	21,5 mm
B - Width of Inner Ring	27 mm
d - Shaft diameter	25 mm

PRODUCT DEFINITION	
e - Distance mounting surface to bearing center	2 mm
H - Housing length, width or diameter	95,2 mm
J - Mounting holes distance	76,2 mm
L - Housing width / diameter	71 mm
N - Mounting hole dimension	8,7 mm
S - Distance front side/bearing centre	7,5 mm

PRODUCT PERFORMANCE	
C - Dynamic load rating	14000000 mN
C0 - Static load rating	7880000 mN
Operating temperature min.	253,15 °K
Operating temperature max.	373,15 °K

OTHER FEATURES	
Mass	0,27 kg
Recommended tightening torque for set screw	5.5 N-m