E20714

Fibre optic through-beam sensor

FE-11-E-V-E3R/2m

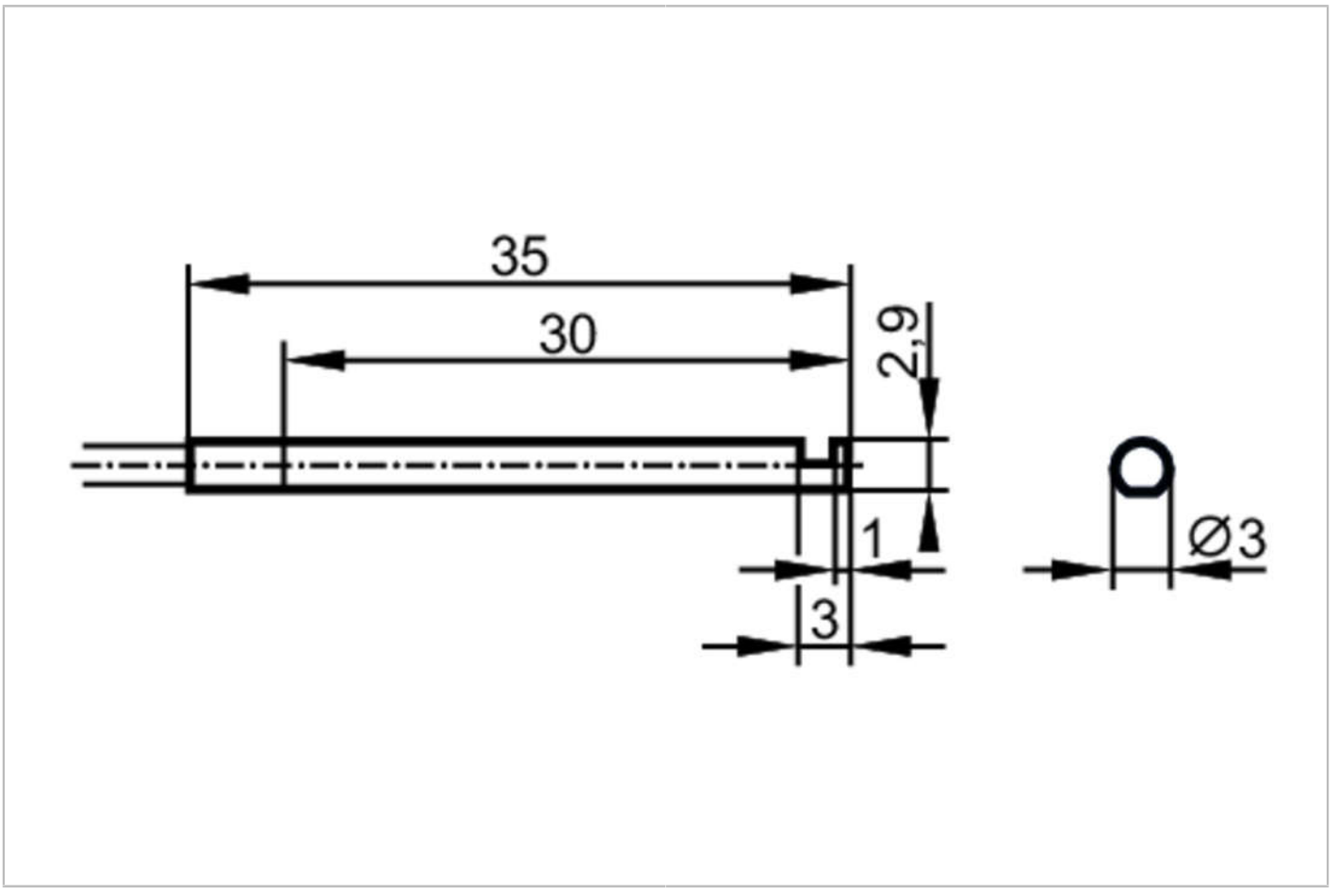

Application		
Design		90° deflection of the light beam
Function principle		Through-beam sensor
Application		For use in industrial environments
Detection zone		
Range with fibre-optic amplifier type		OB50; OBF; OCF; OO50
OB50		
Range of fibre optics	[mm]	140
OBF		
Range of fibre optics	[mm]	230
OCF (High Power)		
Range of fibre optics	[mm]	1720
OO50		
Range of fibre optics	[mm]	400
Operating conditions		
Ambient temperature	[°C]	-40...70
Mechanical data		
Weight	[g]	58.5
Version of sensing head		angled

E20714

Fibre optic through-beam sensor

FE-11-E-V-E3R/2m

Sensing head diameter	[mm]	3
Total length	[mm]	2000
Min. bending radius	[mm]	25
Fibre arrangement		◉
Fibre material		PMMA
Fibre head material		stainless steel (1.4305 / 303)
Fibre sheath material		PE
Accessories		
Items supplied		Mounting clamp:, E20107
Remarks		
Pack quantity		1 pcs.