DATASHEET - NZM1/2-XAB



Spacer, size 1/2

Part no.	**NZM1/2-XAB**
Catalog No.	**260203**
EL-Nummer (Norway)	**0004358741**

Delivery program

Product range	Accessories
Accessories	Spacers
Standard/Approval	UL/CSA, IEC
Construction size	NZM1/2
Description	Enables fast and attractively priced offsetting of varying frame sizes with/without rotary handle or remote operator to the same front depth
For use with	NZM1(-4), PN1(-4), N(S)1(-4) NZM2(-4), PN2(-4), N(S)2(-4)

Notes

Grid depth 17.5 mm, M4 thread

Type contains 4 off spacer

Maximum component capacity:

NZM1: 4 units per fixing screw,

NZM2: 2 units per fixing screw

2 (NZM1) or 4 (NZM2) fixing screws contained per circuit-breaker

Design verification as per IEC/EN 61439

IEC/EN 61439 design verification	
10.2 Strength of materials and parts	
10.2.2 Corrosion resistance	Meets the product standard's requirements.
10.2.3.1 Verification of thermal stability of enclosures	Meets the product standard's requirements.
10.2.3.2 Verification of resistance of insulating materials to normal heat	Meets the product standard's requirements.
10.2.3.3 Verification of resistance of insulating materials to abnormal heat and fire due to internal electric effects	Meets the product standard's requirements.
10.2.4 Resistance to ultra-violet (UV) radiation	Meets the product standard's requirements.
10.2.5 Lifting	Does not apply, since the entire switchgear needs to be evaluated.
10.2.6 Mechanical impact	Does not apply, since the entire switchgear needs to be evaluated.
10.2.7 Inscriptions	Meets the product standard's requirements.
10.3 Degree of protection of ASSEMBLIES	Does not apply, since the entire switchgear needs to be evaluated.
10.4 Clearances and creepage distances	Meets the product standard's requirements.
10.5 Protection against electric shock	Does not apply, since the entire switchgear needs to be evaluated.
10.6 Incorporation of switching devices and components	Does not apply, since the entire switchgear needs to be evaluated.
10.7 Internal electrical circuits and connections	Is the panel builder's responsibility.
10.8 Connections for external conductors	Is the panel builder's responsibility.
10.9 Insulation properties	
10.9.2 Power-frequency electric strength	Is the panel builder's responsibility.
10.9.3 Impulse withstand voltage	Is the panel builder's responsibility.
10.9.4 Testing of enclosures made of insulating material	Is the panel builder's responsibility.
10.10 Temperature rise	The panel builder is responsible for the temperature rise calculation. Eaton will provide heat dissipation data for the devices.
10.11 Short-circuit rating	Is the panel builder's responsibility. The specifications for the switchgear must be observed.
10.12 Electromagnetic compatibility	Is the panel builder's responsibility. The specifications for the switchgear must be observed.
10.13 Mechanical function	The device meets the requirements, provided the information in the instruction leaflet (IL) is observed.

Technical data ETIM 7.0

Fasteners (EG000049) / Spacer sleeve (EC002334)

Machine element, fixing, mounting / Fastening aids / Fastening aids (accessories) / Distance sleeve (ecl@ss10.0.1-23-15-92-02 [ADH976007])		
Material		Plastic
Material quality		Polyamide (PA)
Surface protection		Other
Inner diameter	mm	0
Outer diameter	mm	28
Length	mm	17.5

Approvals

Product Standards		UL489; CSA-C22.2 No. 5-09; IEC60947, CE marking
UL File No.		E140305
UL Category Control No.		DIHS
CSA File No.		022086
CSA Class No.		1437-01
North America Certification		UL listed, CSA certified

Dimensions

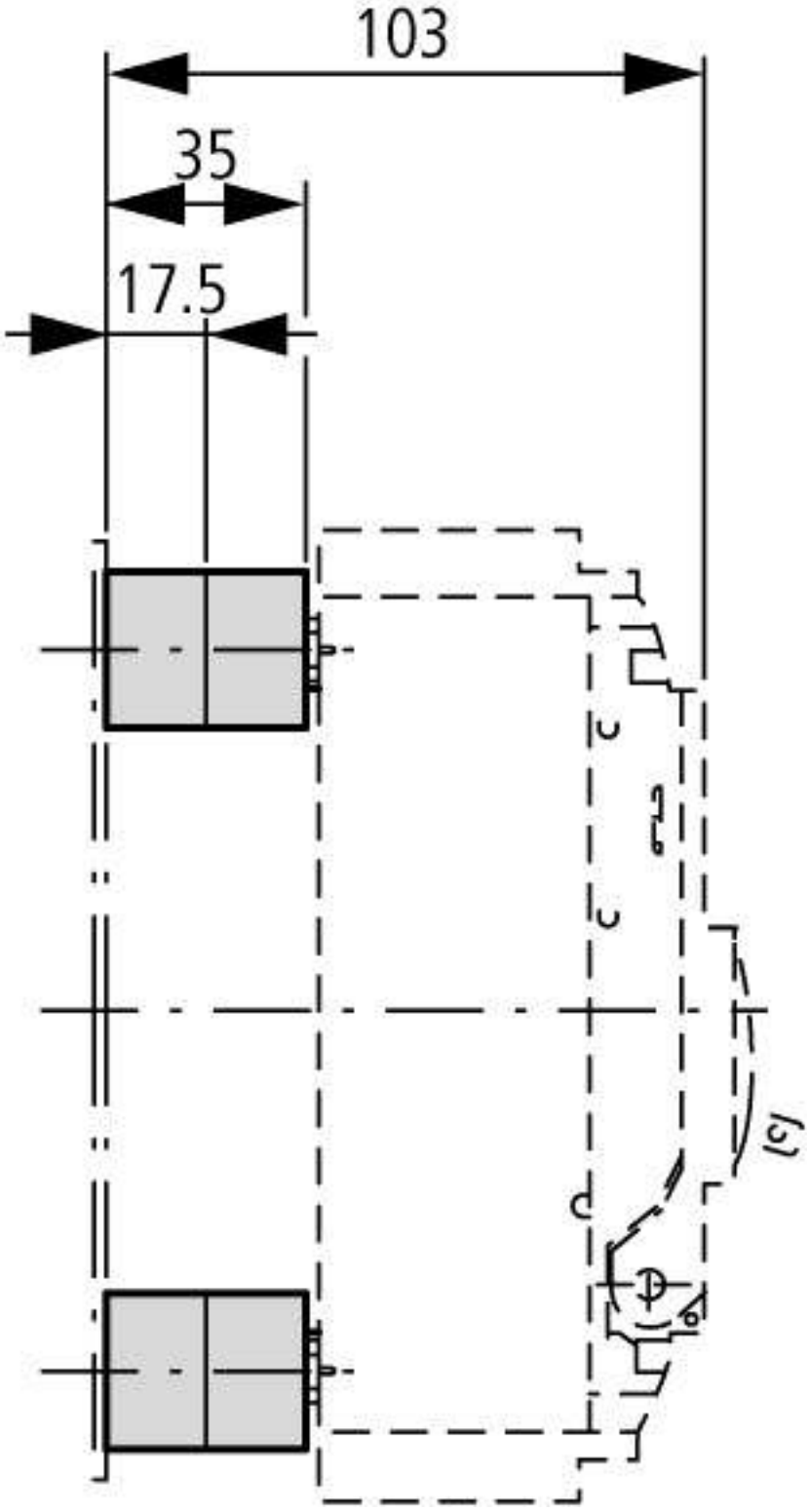

with NZM1, PN1, N1

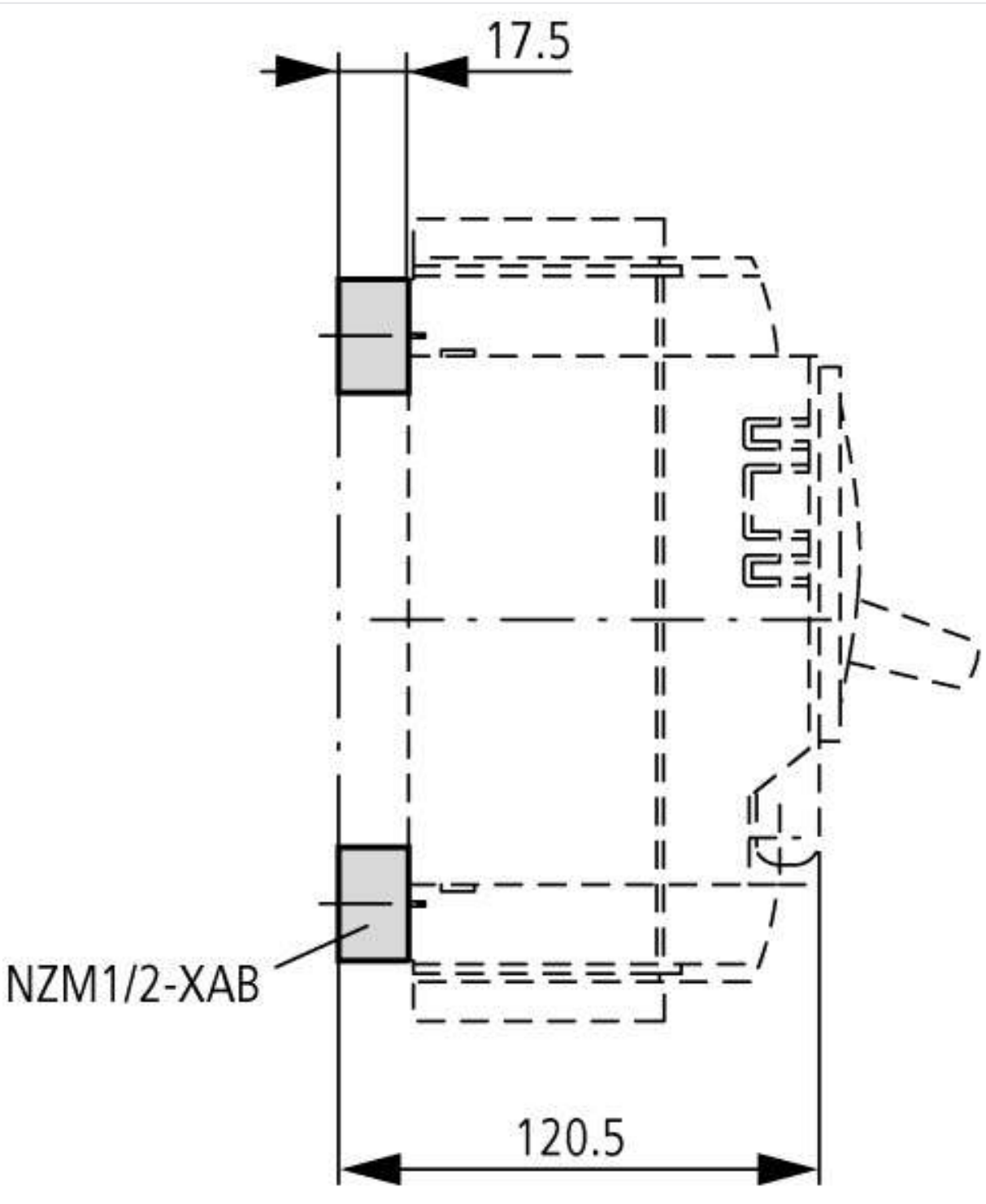

with NZM2, PN2, N2

Additional product information (links)

IL01203002Z (AWA1230-1914) Shunt release, Undervoltage release, Early-make auxiliary contact	
IL01203002Z (AWA1230-1914) Shunt release, Undervoltage release, Early-make auxiliary contact	https://es-assets.eaton.com/DOCUMENTATION/AWA_INSTRUCTIONS/IL01203002Z2010_11.pdf

© 02/2021 by Eaton Industries GmbH