WIRING DIAGRAM

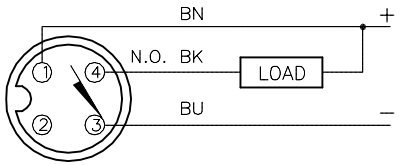

OUTPUT: AN6X

LOCKNUT LN–M18

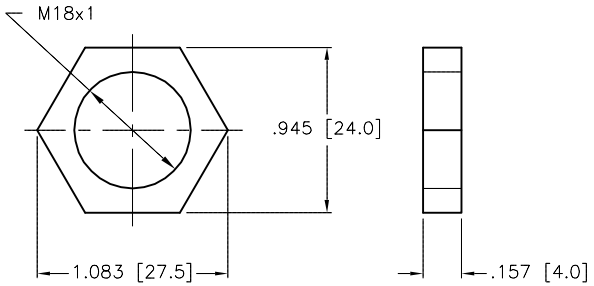

SPECIFICATIONS

OPERATING VOLTAGE	10–30 VDC
RIPPLE	≤10%
HYSTERESIS (DIFFERENTIAL TRAVEL)	3–15% (5% TYPICAL)
VOLTAGE DROP ACROSS CONDUCTING SENSOR	≤ 1.8 V at 200 mA
OUTPUT FUNCTION	NORMALLY OPEN 3-WIRE DC SELF-CONTAINED
TTL COMPATIBLE	NO
SHORT-CIRCUIT PROTECTED	YES
TRIGGER CURRENT FOR OVERLOAD PROTECTION	≥ 220 mA
CONTINUOUS LOAD CURRENT	≤ 200 mA
OFF-STATE (LEAKAGE) CURRENT	<10 µA
NO-LOAD CURRENT	5.5–9.5 mA
TIME DELAY BEFORE AVAILABILITY	≤ 8 ms
POWER-ON EFFECT	Per IEC 947-5-2
REVERSE POLARITY PROTECTION	INCORPORATED
WIRE-BREAK PROTECTION	INCORPORATED
TRANSIENT PROTECTION	Per EN 60947-5-2
OPERATING TEMPERATURE	–25°C to +70°C (–13°F to +158°F)
ENCLOSURE	MEETS NEMA 1, 3, 4, 6, 13 AND IEC IP67
SHOCK	30 g, 11 ms
VIBRATION	55 Hz, 1 mm AMPLITUDE (IN ALL 3 PLANES)
LED FUNCTION	YELLOW: OUTPUT ENERGIZED
RATED OPERATING DISTANCE(Sn)	5mm = 0.197" (NOMINAL)
MAX. SWITCHING FREQUENCY	≤ 0.5 kHz
REPEATABILITY	≤ 2% of RATED OPERATING DISTANCE
SHIELDED	YES

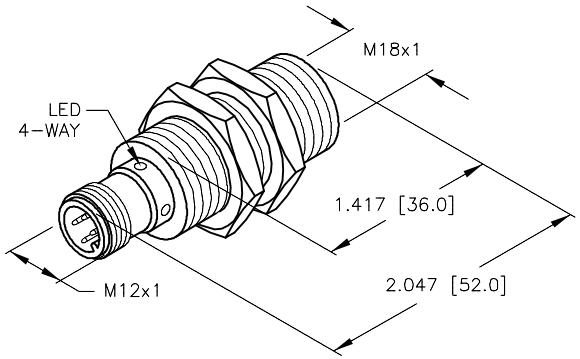

SOURCE DRAWING - FOR REFERENCE ONLY

NOTE: ALL TOLERANCES ±1.0 mm.

REV	DESCRIPTION	BY	DATE	ECO NO.
D	DRAWING PROCESSED AS PART OF ECO 40518	KMY	11/30/12	40518

RELATED DOCUMENTS
1.
2.
3.
4.

3RD ANGLE PROJECTION

THIS DRAWING IS CONFIDENTIAL AND THE PROPERTY OF TURCK INC. USE OF THIS DOCUMENT WITHOUT WRITTEN PERMISSION IS PROHIBITED.

TURCK INC
High Technology Sensors and Automation Controls
3000 CAMPUS DRIVE
MINNEAPOLIS, MN 55441
1-800-544-7769
(763) 553-7300
(763) 553-0708 fax
turck.com

MATERIAL: BRASS BARREL

FINISH: COPPER/NICKEL/ CHROME PLATING

ALL DIMENSIONS DISPLAYED ON THIS DRAWING ARE FOR REFERENCE ONLY

CONTACT TURCK FOR MORE INFORMATION

DRFT: SMW | DATE: 08/10/87

APVD: | SCALE: 1=1.5

UNIT OF MEASUREMENT
INCH [MILLIMETER]
DO NOT SCALE THIS DRAWING

DESCRIPTION: Bi 5-M18-AN6X-H1141

IDENTIFICATION NO.: T4614600 | REV: D

FILE: T4614600 | SHEET 1 OF 1

Approved 12/07/2012, work order #36008 by J.M.