E20514

Angle bracket

ANGLE BRACKET OA

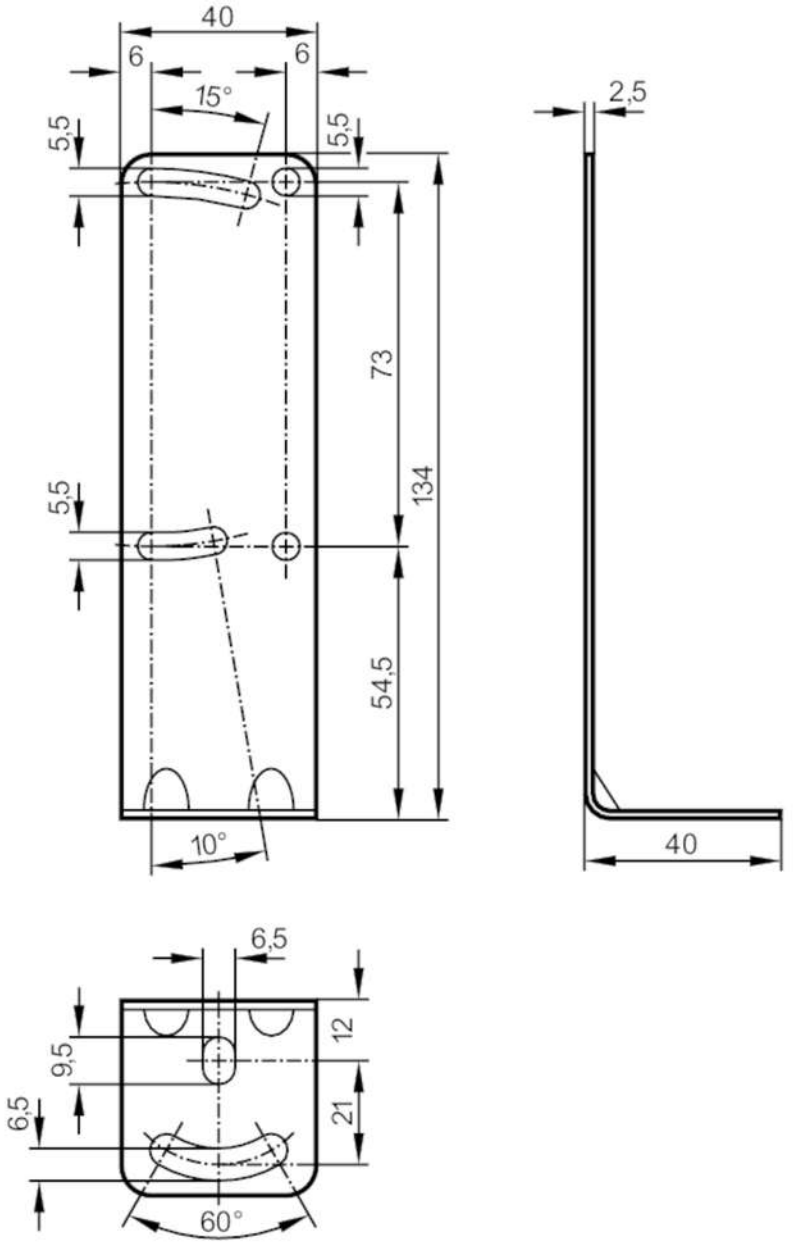

Application		
Design		for type OA
Mechanical data		
Weight	[g]	143.9
Dimensions	[mm]	134 x 40 x 40
Materials		Stahl verzinkt
Accessories		
Items supplied		screws: 2 x M5 x 35
		hexagon nuts: 2
		washers: 2
		spring washers: 2

E20514

Angle bracket

ANGLE BRACKET OA

Remarks	
Pack quantity	1 pcs.