PM1689

Flush pressure sensor

PM-,10BREA01-E-ZVG/US

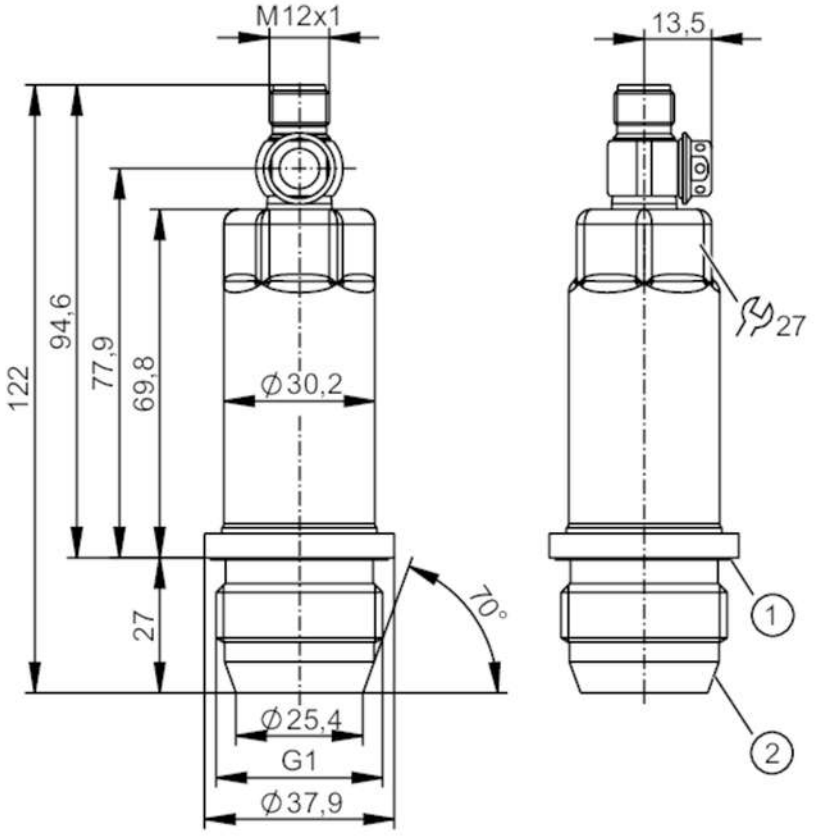

1 groove with sealing ring (DIN EN ISO 1179-2)
2 G1 sealing cone external thread

ACS CE CRN cULus LISTED EC 1935/2004 EHEDG Tested FCM FDA IO-Link Reg31 UKCA

Product characteristics				
Number of inputs and outputs	Number of digital outputs: 1; Number of analogue outputs: 1			
Measuring range	-0.005...0.1 bar	-5...100 mbar	-0.073...1.45 psi	-0.5...10 kPa
Process connection	threaded connection G 1 external thread sealing cone			

Application				
Special feature	Gold-plated contacts			
Measuring element	ceramic-capacitive pressure measuring cell			
Temperature monitoring	no			
Application	flush mountable for the food and beverage industry			
Media	viscous media and liquids with suspended particles; liquids and gases			
Medium temperature [°C]	-25...150			
Min. bursting pressure	30000 mbar	435 psi	3000 kPa	
Pressure rating	4000 mbar	58 psi	400 kPa	
Vacuum resistance [mbar]	-1000			
Type of pressure	relative pressure			
No dead space	yes			
MAWP (for applications according to CRN) [bar]	4			

PM1689

Flush pressure sensor

PM-,10BREA01-E-ZVG/US

Electrical data					
Operating voltage	[V]	18...30 DC			
Min. insulation resistance	[MΩ]	100; (500 V DC)			
Protection class		III			
Reverse polarity protection		yes			
Measuring principle		hydrostatic			
Integrated watchdog		yes			
2-wire					
Current consumption	[mA]	3.5...21.5			
Power-on delay time	[s]	1			
3-wire					
Current consumption	[mA]	< 45			
Power-on delay time	[s]	0.5			
Inputs / outputs					
Number of inputs and outputs		Number of digital outputs: 1; Number of analogue outputs: 1			
Outputs					
Total number of outputs		2			
Output signal		analogue signal; IO-Link; (configurable)			
Number of digital outputs		1; (IO-Link)			
Number of analogue outputs		1			
Analogue current output	[mA]	4...20; (scalable)			
Max. load	[Ω]	700; (Ub = 24 V; (Ub - 9 V) / 21.5 mA)			
Short-circuit proof		yes			
Overload protection		yes			
Measuring/setting range					
Measuring range		-0.005...0.1 bar	-5...100 mbar	-0.073...1.45 psi	-0.5...10 kPa
Analogue start point		-5...80 mbar	-0.073...1.16 psi	-0.5...8 kPa	
Analogue end point		15...100 mbar	0.218...1.45 psi	1.5...10 kPa	
In steps of		0.05 mbar	0.001 psi	0.005 kPa	
Factory setting		ASP = 0.0 mbar	AEP = 100 mbar		
Accuracy / deviations					
Repeatability	[% of the span]	< ± 0,1; (with temperature fluctuations < 10 K; Turn down 1:1)			
Characteristics deviation	[% of the span]	< ± 0,5; (linearity incl. hysteresis and repeatability, limit value setting to DIN EN IEC 62828-1)			
Linearity deviation	[% of the span]	< ± 0,25; (Turn down 1:1)			
Hysteresis deviation	[% of the span]	< ± 0,2; (Turn down 1:1)			
Long-term stability	[% of the span]	< ± 0,1; (Turn down 1:1; per year)			

PM1689

Flush pressure sensor

PM-,10BREA01-E-ZVG/US

Total deviation over temperature range		**Temperature range**	**total deviation**
		-25...15 °C	Characteristics deviation ± 0,15 % of the span / 10 K
		15...80 °C	Characteristics deviation
		80...150 °C	Characteristics deviation ± 0,2 % of the span / 10 K
Notes on the accuracy / deviation		for further details see section Diagrams and graphs	
Response times			
Damping for the analogue output dAA	[s]	0...4	
2-wire			
Step response time analogue output	[ms]	30	
3-wire			
Step response time analogue output	[ms]	7	
Interfaces			
Communication interface		IO-Link	
Transmission type		COM2 (38,4 kBaud)	
IO-Link revision		1.1	
SDCI standard		IEC 61131-9	
Profiles		Digital Measuring Sensor (0x000A), Identification and Diagnosis (0x4000)	
SIO mode		no	
Required master port type		A	
Process data analogue		3	
Min. process cycle time	[ms]	3.2	
IO-Link resolution pressure	[mbar]	0.02	
IO-Link process data (cyclical)		**function**	**bit length**
		pressure	16
		device status	4
IO-Link functions (acyclical)		application specific tag; internal temperature	
Supported DeviceIDs		**Type of operation**	**DeviceID**
		default	670
Operating conditions			
Ambient temperature	[°C]	-25...80	
Storage temperature	[°C]	-40...100	
Protection		IP 67; IP 68; IP 69K	
Tests / approvals			
EMC		DIN EN 61000-6-2	
		DIN EN 61000-6-3	
Shock resistance		DIN EN 60068-2-27	50 g (11 ms)
Vibration resistance		DIN EN 60068-2-6	20 g (10...2000 Hz)
MTTF	[years]	323	
Note on approval		factory certificate available as download at www.factory-certificate.ifm	
UL approval		UL Approval no.	J022

PM1689

Flush pressure sensor

PM-,10BREA01-E-ZVG/US

Mechanical data		
Weight	[g]	337.4
Housing		cylindrical
Dimensions	[mm]	Ø 30.2 / L = 122
Materials		stainless steel (316L/1.4404); PBT
Materials (wetted parts)		ceramics (99.9 % Al2O3); stainless steel (316L/1.4435); surface characteristics: Ra < 0,4 / Rz 4; PTFE
Min. pressure cycles		100 million
Tightening torque	[Nm]	20
Process connection		threaded connection G 1 external thread sealing cone

Remarks	
Pack quantity	1 pcs.

Electrical connection

Connector: 1 x M12; coding: A; Contacts: gold-plated



Connection

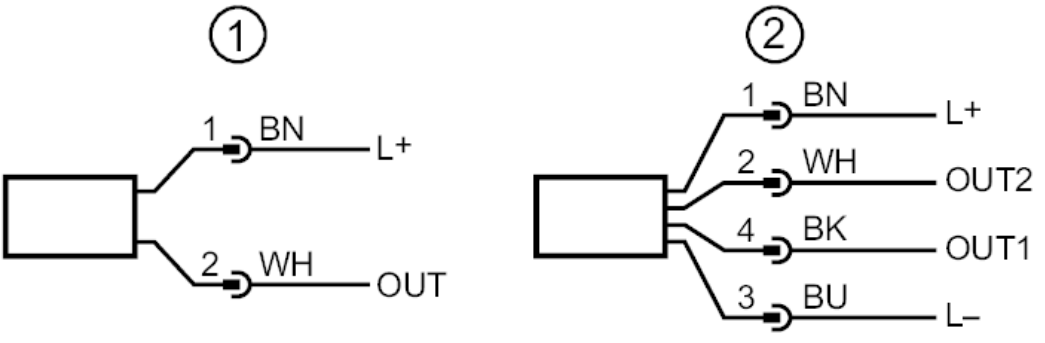

1	connection for 2-wire operation (analogue)
2	connection for 3-wire operation (analogue / IO-Link) OUT1 : IO-Link OUT2 : analogue output

PM1689

Flush pressure sensor

PM-,10BREA01-E-ZVG/US

Diagrams and graphs

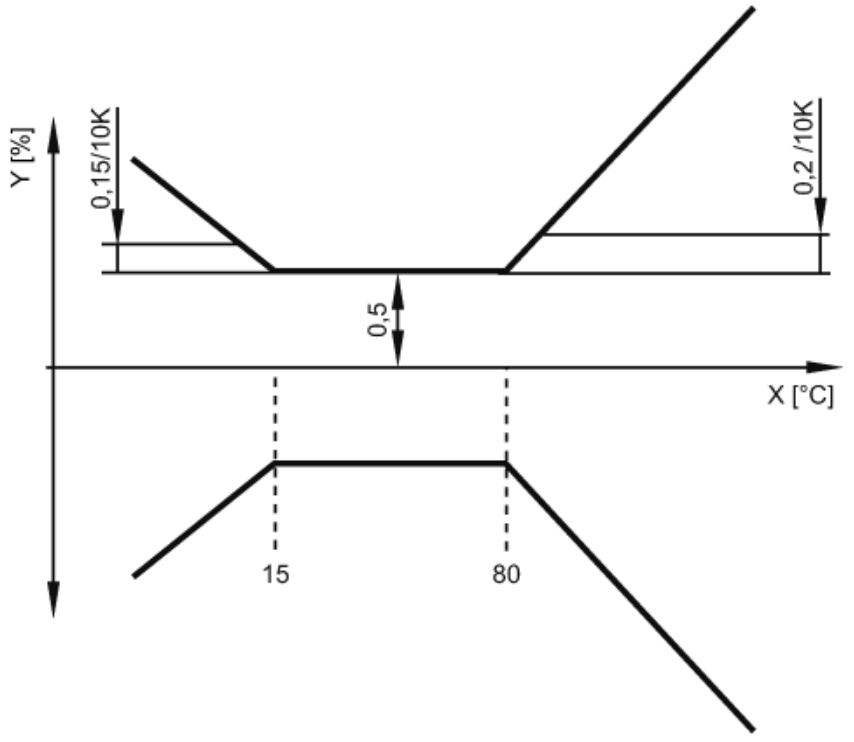

X temperature

Y total deviation