Safety Relay Modules
PROTECT SRB series







SCHMERSAL

PROTECT -SRB's:
The new generation of multifunctional safety relay modules



To provide new functions and to continue with well tried and tested features: this is the SCHMERSAL Group's aim for its new generation of innovative PROTECT SRB series of safety relay modules.

- It's now easier to install safety-related parts of control systems even more simply and quickly.
- An increased availability of machine controls is achieved by additional functions and features.

The many years of experience within the SCHMERSAL Group companies Elan/ Wettenberg, Steute/Löhne and K.A. Schmersal/Wuppertal are reflected in this new development through a special combination of design and functional advantages.

PROTECT SRBs have been used successfully since 2001. An extended range (status: beginning of 2002) now takes the following shape:

- **Multifunctional versions in housings with an installed width of 45 mm**
- **Standard versions with additional features in housings of 22.5 mm installed width**
- **Two-hand modules in housings of 22.5 mm installed width.**





Examples of the type of protective devices which can be connected



Safety switches



Safety switches with guard locking



Position switches with safety function



Pull-wire emergency switches



Two-hand operating panels

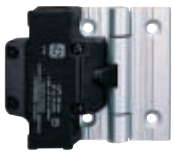

Safety switches for rotating protective devices

PROTECT -SRB's: Common features

The circuitry of all **PROTECT** SRB safety relay modules complies with the control category 4 to EN 954-1 (BG prototype testing in preparation or applied for).

Apart from a few exceptions, all versions have the special feature of a "hybrid" fuse.

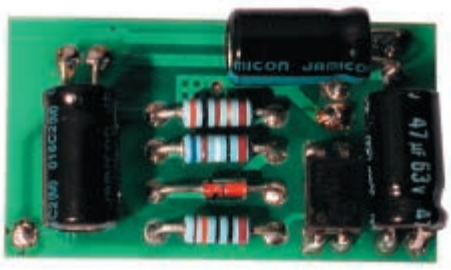

Hybridsicherung: Maßstab 4:1

Unlike a glass fuse, if a hybrid fuse is used the function can be restored following a short-circuit without accessing the hardware. However, this is not automatic as is the case with commercially available electronic fuses but only once the supply voltage has been interrupted and then switched on again. This reset thus avoids the danger of an unexpected restart in the operating mode of "automatic operation" following the rectification of a short-circuit.

Another common feature of all **PROTECT** SRB modules is the new housing design which offers the following advantages to the user from the outset irrespective of the chosen circuitry:

① Plug-in terminals so that pre-assembled cable harnesses can be used and the unit can be serviced quicker (SRB 301LC on request).

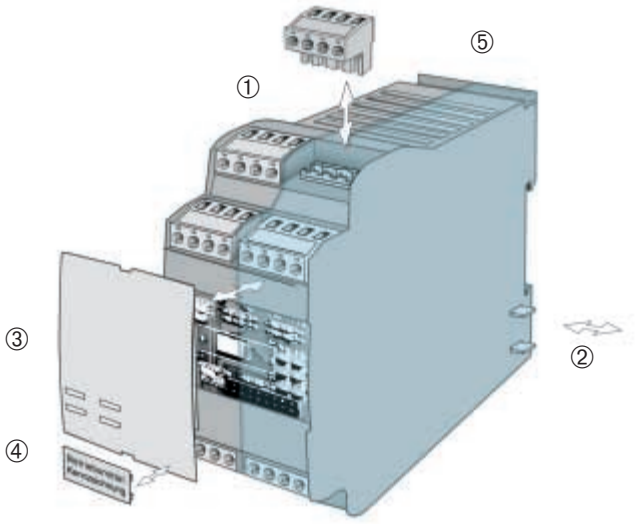

② Looping through of the supply voltage without additional wiring in the case of several adjacent modules by the push-out current transfer knife contacts assuming this task.

③ EN 292 compliant, front accessible adjustment which is protected from tampering by a cover.

④ Snap-on item designations

⑤ Air vents in the new housings for applications under even higher operating temperatures.

Additional services

There is a CD ROM in the envelope at the back of this catalogue as a special customer service with the aid of which a complete connection diagram can be drawn up from the different functionalities (refer to page 15).





Safety laser scanner



Magnet safety sensors



Safety light grids

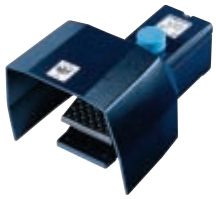

Foot switches with safety function

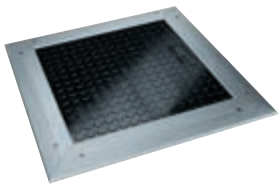

Tactile protective devices



EMERGENCY STOP pushbuttons

PROTECT-SRB's: Multifunctional versions



Multifunctionality is reflected in the module developments SRB 308IT and SRB 219IT (for data sheet refer to page 10 and 12 respectively) and refers in particular to additional options concerning:

- Diagnosis and visualisation
- Potential uses
- Circuitry.

Increased availability of machines and controls
The broad and easy to handle diagnostic features are the prime economic advantages of these modules. These relate both to the relay circuitry itself and the connected periphery.

Nearly every status in the safety circuit can be incorporated into the trouble-shooting management part of a machine control via terminals specially provided for this task.

- Fewer diagnostic contacts in the form of additional PLC feedback signals from the sensor/actuator level are required.
- No additional bus interfaces.
- The need to interpret LED function displays also loses importance.

Universal possibilities of use
All commercially available protective devices with an electro-mechanical principle of operation can be connected to the SRB modules 308IT and 219IT, e.g. emergency stop control devices, interlocking devices with or without locking, contact mats and similar, but also

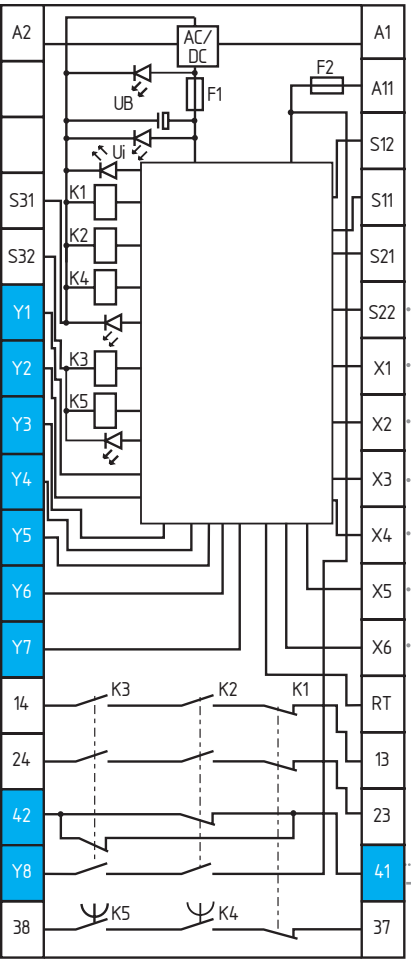

Signalling outputs ...	Operating voltage not applied	Operating voltage applied, guard open, feed-back loop closed	Operating voltage applied, guard closed, feed-back loop closed	Operating voltage applied, guard closed, feed-back loop open
... for diagnostic purposes	Module not ready for operation	Module ready for operation	Module ready for operation	Module active
Y1 – Operating voltage	0	1	1	1
Y2 – Internal operating voltage	0	1	1	1
Y3 – Channel 1 (S11-S12)	0	0	1	1
Y4 – Channel 2 (S21-S22, S31-S32)	0	0	1	1
Y5 – Feedback loop (X1-X2)	0	1	1	0
Y6 – Relay K1	0	0	0	0
Y7 – Relay K4, K5	0	0	0	1
Y8 – Auxiliary NO contact	0	0	0	1
Auxiliary NC contact 41-42	0	1	1	0

Excerpt!
Refer to page 22
for complete table

- Opto-electronic protective devices as well as
- magnetic safety sensors because the circuitry also contains a current and voltage restriction.

The following functions are available options

- 1 and 2 channel operation
- Reset with trailing edge detection or automatic start, optionally with time monitoring of the channels 1 and 2 ∞ or 100 ms
- Start-up testing
- Cross-short recognition
- Feedback loop monitoring.

Special features of the circuitry

A 3-relay circuitry with its own start relay permits moving protective devices to be operated with traditional start-up testing. This means that – after the supply voltage is switched on – the protective safeguard must be opened and must be closed again before the module can be enabled.

The start-up testing enables inconsistencies in the upstream and downstream periphery to be detected if the relay circuitry has lost its capacity to store faults in de-energised state.

The start-up testing serves to tune the subsystem of "sensor level/pre-control level/ main control level" in the direction of a comprehensive control category 4 to EN 954-1. Without start-up testing the control category of all commercially available safety relay modules refers exclusively to the circuitry itself.

In addition to the safety-related advantage of the start-up testing, the traditional 3-relay technology (start relay plus two channel relays) guarantees increased availability of the modules in the operating mode "automatic start".

A slow increase in voltage or a short interruption of the voltage (< 20 ms) does not lead to interlocking of the two channel relays – as a result of the additional start relay – and thus avoids operational disturbances which can only be avoided in today's 2-relay technology with additional circuitry measures.



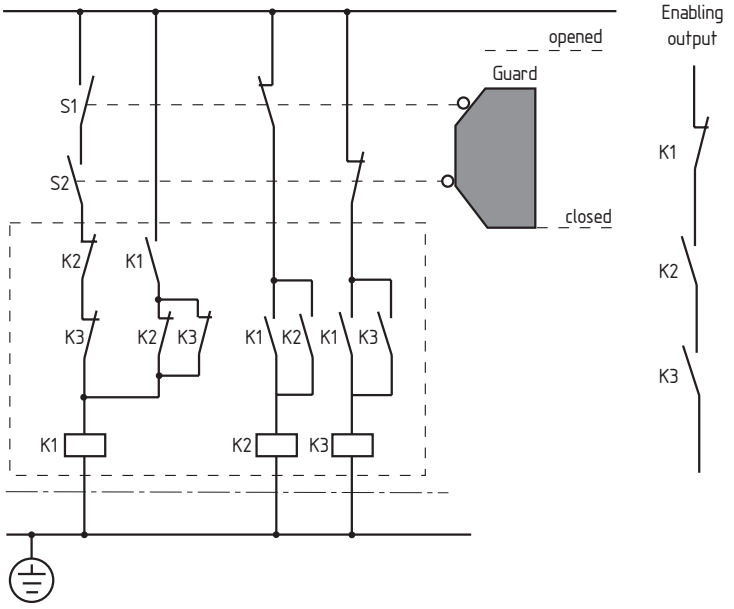

Example of a safety circuitry with start-up testing. The start-up testing also enables the upstream and downstream periphery to be tuned in the direction of control category 4 to EN 954-1. See above.



Multifunctional versions – installed width 45 mm (refer to page 9 et seq.)

	SRB 308IT	SRB 219IT
Configuration of safety enabling outputs		
Safety enabling outputs STOP 0	3	2
Safety enabling outputs STOP 1	0	1
– maximum load current/A	6	6
Diagnostic options		
Auxiliary NC contact/auxiliary NO contact	2	1
– maximum load current/A	2	2
Signalling contacts	6	8
– maximum load current/mA	10	10
Start configuration		
Trailing edge	●	●
Automatic start	●	●
Start-up testing	●	●
Sensor configuration		
Time window channels 1/2, ∞	■	■
Cross-short recognition	■	■
1-channel control	●	●
Antivalent control		
Fusing		
Hybrid fusing	▲	▲
Supply current		
24 VDC/VAC	▲	▲
48 VAC	▲	
115 VAC	▲	
230 VAC	▲	
Certifications		
BG (in preparation)		
CSA (in preparation)		
UL (in preparation)		

▲ = preset, ● = as an option, ■ = special feature as an option



PROTECT -SRB's:
Standard versions with additional advantages

This part of the range corresponds to the state of the art in terms of design principle using which the modules have been developed in 2-relay technology. However, additional circuitry features also in the "automatic start" operating mode achieve the same reliability as known from 3-relay modules.

This part of the range also features the advantages offered by the new housing technology used in the PROTECT SRBs and – with only a few exceptions – the advantage of hybrid fusing.

For reasons of size and cost, the functionality of the different versions is tailored to suit the defined tasks (refer also to selection table on page 8).

LED displays are provided in the standard versions with optical fibres.



PROTECT -SRB's:
Two-hand modules

The special feature of the two-hand module SRB 201ZH of the PROTECT series is the simple and inexpensive circuit design. The special mode of function enables a simplified design whilst fully satisfying the requirements of the highest safety category III/C to EN 574 (control category 4 to EN 954-1).

The two-hand modules SRB 201ZH are equipped for the connection of two actuators each with one NC and NO contact. Both actuators must be operated simultaneously within a specific time of < 0.5 s in compliance with EN 574 type III/C requirements. If the time is exceeded they must both be released before a restart can be initiated.



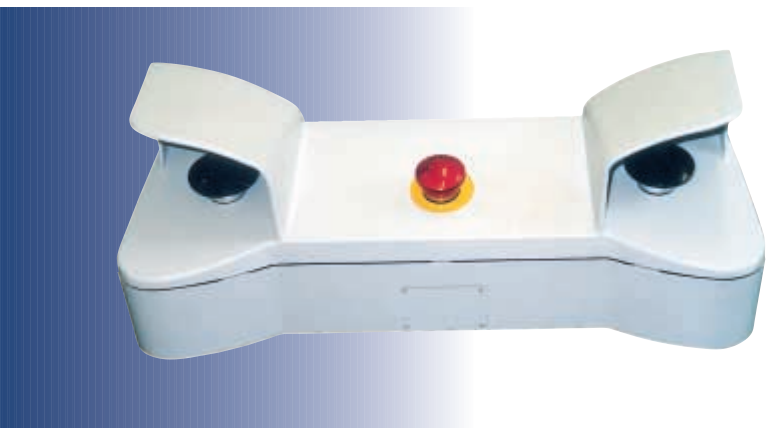



Standard versions – installed width 22.5 mm (refer to page 23 et seq.)

	SRB 301LC	SRB 301ST	SRB 301AN	SRB 211ST	SRB 201ZH
Configuration of safety enabling outputs					
Safety enabling outputs STOP 0	3	3	3	2	2
Safety enabling outputs STOP 1	0	0	0	1	0
– maximum load current/A	6	6	6	4	6
Diagnostic options					
Auxiliary NC contact/Auxiliary NO contact	1	1			1
– maximum load current/A	2	2			2
Signalling contacts			1	1	
– maximum load current/mA			100	100	
Start configuration					
Trailing edge		■	■	■	
Automatic start	■	■	■	■	
Start-up testing					
Sensor configuration					
Time window channels 1/2, ∞	▲	▲	▲	▲	
Cross-short recognition	■	■	▲	■	▲
1-channel control	●	●		●	
Antivalent control			▲		▲
Fusing					
Hybrid fusing		▲		▲	
Electronic fusing (polyswitch)			▲		▲
Glass fusing*	▲				
Supply current					
24 VDC					▲
24 VDC/VAC	▲	▲	▲	▲	
Certifications					
BG (in preparation)					
CSA (in preparation)					
UL (in preparation)					

▲ = preset, ● = as an option, ■ = special feature as an option

* On request: electronic fusing (polyswitch)



Safety relay modules
Protect SRB series
– Multifunctional version



1.1 SRB 308IT

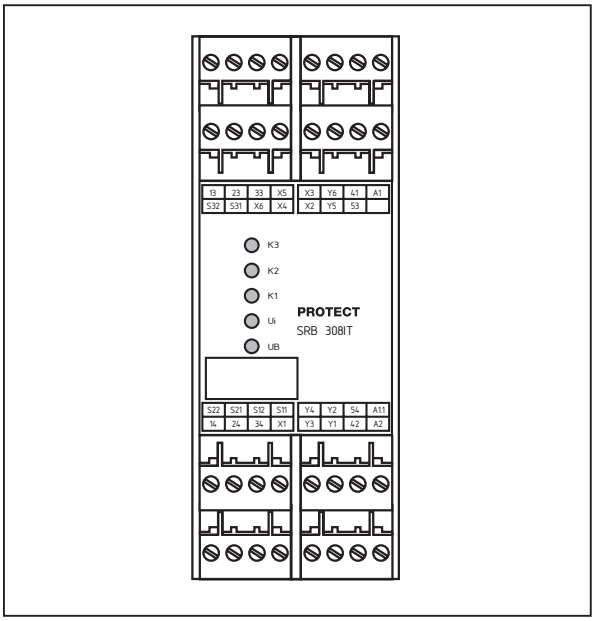

Features

- Plug-in terminals
- 1 or 2-channel control
- 3 safety enabling outputs
- 6 signalling outputs (semiconductor)
- 1 feedback output with NC and NO function (floating contacts)
- Version with different operating voltages
- with hybrid fusing
- optionally
  - cross-short recognition
  - trailing edge
  - automatic reset function
- Suitable for signal processing of optionally
  - floating outputs, e.g. emergency stop control devices, interlocking devices, etc.
  - outputs of magnet safety sensors (for which current and voltage restriction integrated)
  - P-switching semiconductor outputs, e.g. AOPD's
- Installed width: 45 mm
- Green LED displays for relays K1, K2, K3, U_B and U_i

Dimensions 45 x 100 x 121 mm

Type designation	Operating voltage	**24 VAC/DC**	**48 VAC**	**115 VAC**	**230 VAC**
	Enabling paths 3 NO/1 NC	**SRB 308IT-24V**	**SRB 308IT-48V**	**SRB 308IT-115V**	**SRB 308IT-230V**

Test symbol (in preparation) FRG USA CAN

Circuit example

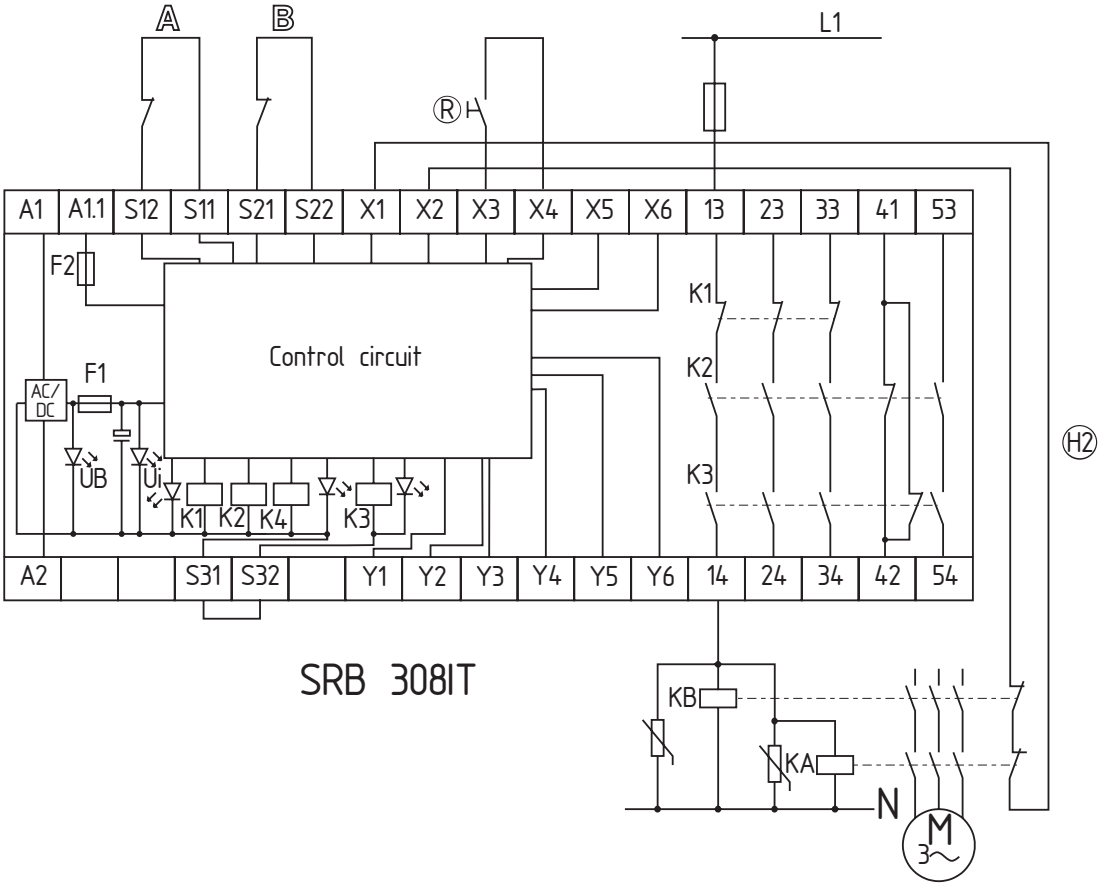

NB

- 2-channel control (example without cross-short recognition), shown by way of example of a guard monitoring system with two contacts A and B, at least one of which is a contact with positive opening; with external reset button ®
- F1 = hybrid fusing
- F2 = protection of signalling outputs
- Power level: 2-channel control, suitable for contact amplification and contact multiplication through contactors or relays with positively driven contacts.
- (H2) = feedback loop
- The control circuit detects wire breaks and earth leakage in the monitoring circuit.

1.2 SRB 219IT

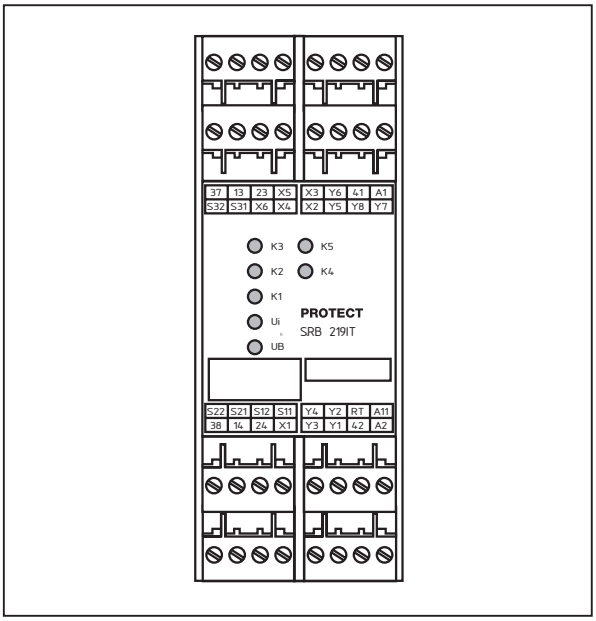

Features

- Plug-in terminals
- 1 or 2-channel control
- 3 safety enabling outputs, of which one with drop-out delay: 1–30 sec.
- 8 signalling outputs (semiconductor)
- 1 feedback output with NC function (floating contacts)
- with hybrid fusing
- optionally
  - cross-short recognition
  - trailing edge
  - automatic reset function
- Suitable for signal processing of optionally
  - floating outputs, e.g. emergency stop control devices, interlocking devices, etc.
  - outputs of magnet safety sensors (for which current and voltage restriction integrated)
  - P-switching semiconductor outputs, e.g. AOPD's
- Installed width: 45 mm
- Green LED displays for relays K1, K2, K3, K4, K5, U_B and U_i

Dimensions 45 x 100 x 121 mm

Type designation	Operating voltage	**24 VAC/DC**
	Enabling paths 2 NO/1 NO ⊰/1 NC	**SRB 219IT-24V**

Test symbol (in preparation)

FRG	USA	CAN

Circuit example

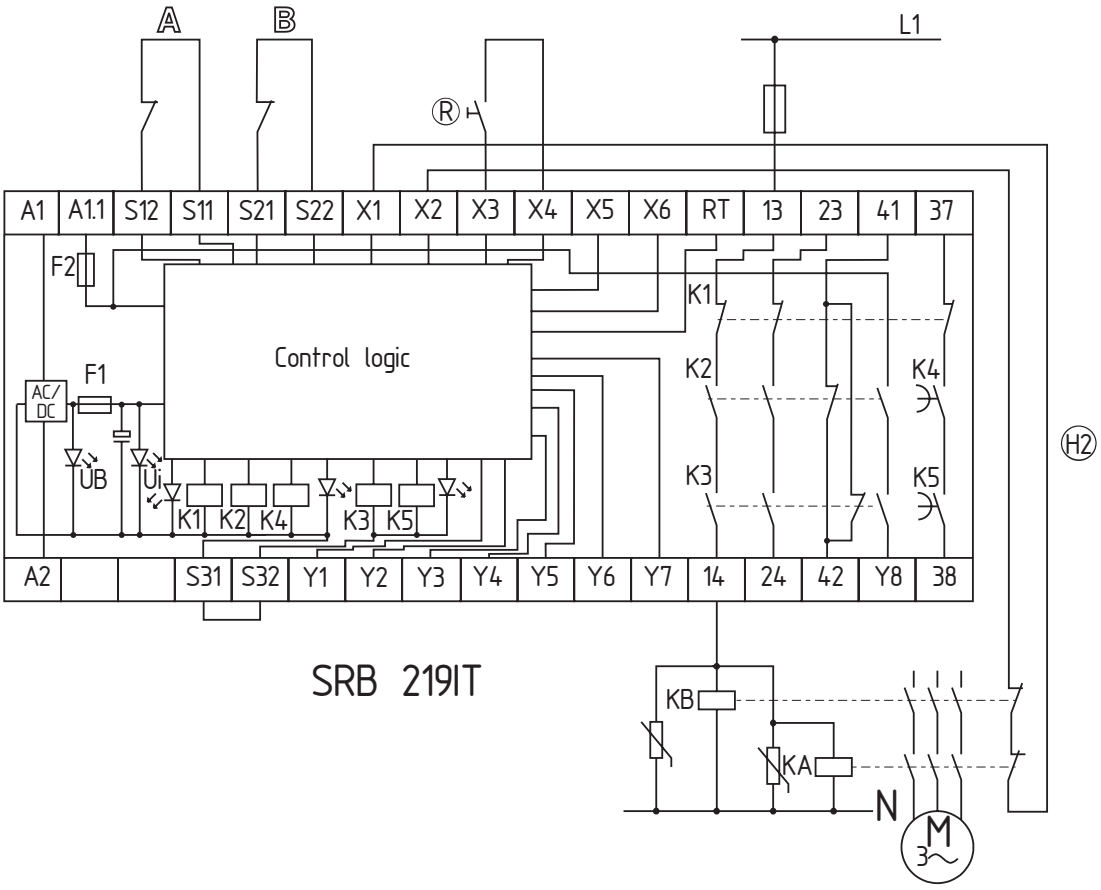

NB

- 2-channel control (example without cross-short recognition), shown by way of example of a guard monitoring system with two contacts A and B, at least one of which is a contact with positive opening; with external reset button ®
- F1 = hybrid fusing
- F2 = protection of signalling outputs
- Power level: 2-channel control, suitable for contact amplification and contact multiplication through contactors or relays with positively driven contacts.
- (H2) = feedback loop
- The control circuit detects wire breaks and earth leakage in the monitoring circuit.

Time delay

- The time-delayed safety enabling output 37/38 can be set with a dropout delay of between 1 to 30 seconds (see setting instructions).
- The safety enabling output 37/38 corresponds to STOP category 1 to EN 60 204-1. The safety enabling outputs 13/14 and 23/24 correspond to STOP category 0 to EN 60204-1.
- The dropout delay can be set by means of potentiometer accessible on the front side of the housing.

Premature switching off of the time delay

- The dropout delay can be ended prematurely via the RT input.
- The RT input facilitates the “switching off” of time-delayed enabling output 37/38 before expiry of the set time.
- The reset function is only effective during the dropout delay (after switching off the safety relay module). Internally a reset signal is generated by a “rising edge” (activation of the 24 VDC signal at the RT input).

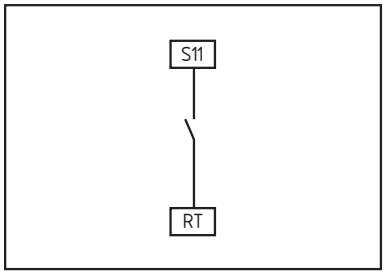

1.3 Technical data

	SRB 308IT	SRB 219IT
Operating voltage	24 VDC –15%/+20%, residual ripple max. 10% 24 VAC, 48 VAC, 115 VAC, 230 VAC –15%/+10%	24 VDC –15%/+20%, residual ripple max. 10% 24 VAC –15%/+10%
Frequency range	50/60 Hz (with AC operating voltage)	
Fuse of operating voltage	internal electronic fuse F1, triggering current > 0.5 A, reset after interruption of supply voltage	
Power consumption	max. 3 VA, 3 W	max. 5.2 VA, 4.4 W
Voltage and current restrictions of the control circuits S11/S12, S21/S22, S31/S32	max. 28 VDC/50 mA	
Voltage and current of the control circuits X3/X5	max. 28 VDC/100 mA	
Switching capacity of the enabling contacts	230 VAC, 6 A ohmic (inductive with suitable suppressor circuit)	
Fuse of the enabling contacts	6 A slow-blowing	
Switching capacity of the auxiliary outputs	41/42, 53/54: 24 VDC, 2 A	41/42: 24 VDC, 2 A
Fuse of the auxiliary contacts	2 A slow-blowing	
Switching capacity of the signalling contacts	Y1, Y2, Y3, Y4, Y5, Y6: 24 VDC, max. 10 mA	Y1, Y2, Y3, Y4, Y5, Y6, Y7, Y8: 24 VDC, max. 10 mA
Fuse of the signalling outputs	internal electronic fuse F2, tripping current > 100 mA	
External auxiliary voltages	A1.1: 24 VDC –10%/+10%	
Utilisation categories	13/14, 23/24, 33/34: AC 15: 230 VAC, 6 A DC 13: 24 VDC, 6 A	13/14, 23/24: AC 15: 230 VAC, 6 A; DC 13: 24 VDC, 6 A 37/38: AC 15: 230 VAC, 3 A; DC 13: 24 VDC, 2 A
Pickup delay	≤ 60 ms/≤ 200 ms (autostart/reset button)	
Dropout delay	≤ 20 ms	
Varistor circuitry*	Shorter dropout delay	
Contact material/contacts	AgNi, AgSnO, self-cleaning, positively driven	
Contact resistance	max. 100 mOhm in new state	
Air clearance and creepage distance	DIN VDE 0110-1 (04.97), 4 kV/2	
Cable connections	Plug-in self-lifting screw terminals min. 0.2 mm^2, max. 2.5 mm^2, strand or multicore with wire end ferrule	
Dimensions	h/b/d 100 mm/45 mm/121 mm	
Weight	340 g (400 g with transformer)	360 g
Ambient operating temperature	–25 °C ... 45 °C (derating curve upon request)	
Mechanical life	10^7 switching cycles	
Terminal markings	DIN EN 50 005/DIN 50 013	

* upon request

The following selection of applications is intended to provide users with assistance on which functionalities PROTECT SRBs offer.

The circuit examples are suggestions which do not (cannot), however, release the user from his own responsibility to check the circuitry carefully in terms of its suitability for the individual case.

A CD ROM is provided with this catalogue as an additional service with the aid of which a complete connection diagram can be compiled from the different individual functionalities.

Since EN 954-1 does not require an overall control category for safety circuits, the control category (SK) is shown separately for upstream and downstream periphery as well as for the SRB module itself.

Example: monitored start / without cross-short recognition / dual-channel control

Monitored start

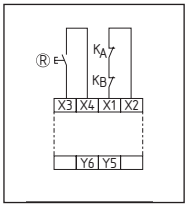

Without cross-short recognition

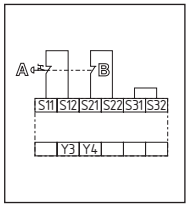

Dual-channel control

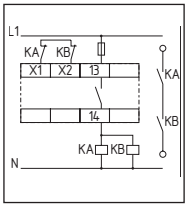

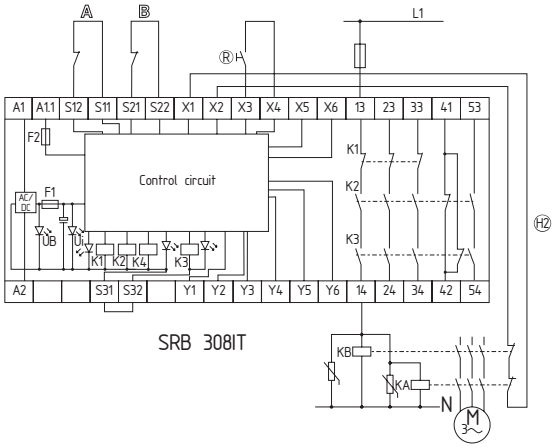

Control category:
- **Sensor configuration SK3**
- **SRB module SK4**
- **Actuator level SK4**

1.4 Selection of applications

Start configuration
External reset button . . . . . Page 16
Automatic (time offset approx. 100 ms) . . . . . Page 16
Start-up testing . . . . . Page 16

Sensor configuration
EMERGENCY-STOP . . . . . Page 17
Guard . . . . . Page 18
P-switching semiconductor . . . . . Page 19
Magnetic safety sensors . . . . . Page 19

Actuator configuration/contact multiplication (KV)
Single-channel . . . . . Page 20
Dual-channel . . . . . Page 20
Diversitary . . . . . Page 20

Start configuration

External reset button
- The external reset button is connected to terminals X3-X4.
- Programming to the function “trailing edge” by means of switch AF (switch position = 1) on the front side of the housing.

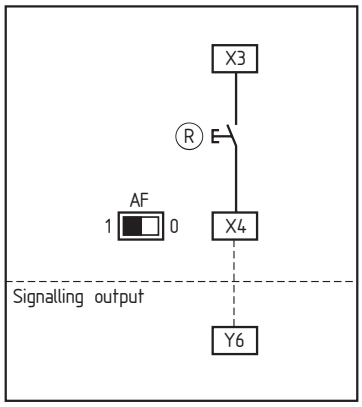

Automatic start
- Programming to automatic start by means of connecting terminals X3-X5.
- The time offset between channels 1 and 2 is approx. 100 ms.
- Programming to endless time offset between channels 1 and 2 by means of connecting terminals X3-X6.
- If the operating mode “automatic start” is used, an automatic restart after standstill in case of emergency to EN 60 204-1 Section 9.2.5.4.2 and 10.8.3 is to be prevented by higher ranking system.

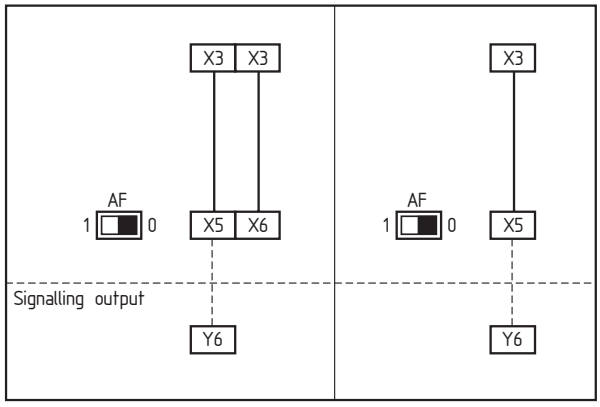

Time offset ∞ **Time offset 100 ms**

Start-up testing
- Start-up testing, see page 6
- Additional auxiliary contacts are to be provided as contacts serving the purposes of start-up testing.

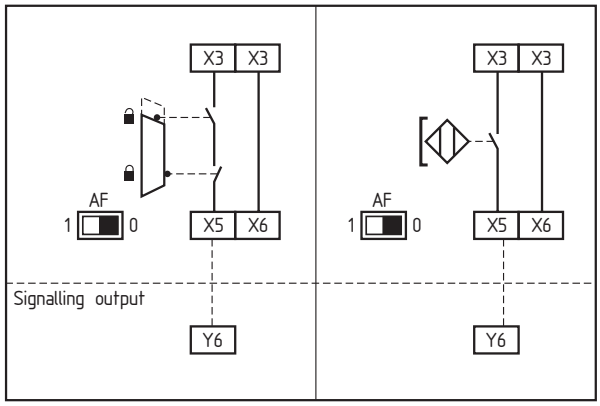

Sensor configuration

Single-channel EMERGENCY STOP circuit to EN 418/EN 60 947-5-5

- Detects wire break and earth leakage in EMERGENCY STOP circuit.

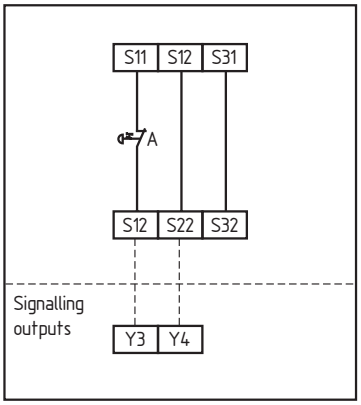

Dual-channel EMERGENCY STOP circuit to EN 418/EN 60 947-5-5

- Detects wire break and earth leakage in the EMERGENCY STOP circuits.
- Cross shorts in the EMERGENCY STOP circuits are not detected.

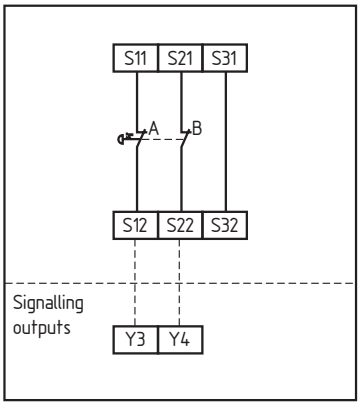

Dual-channel EMERGENCY STOP circuit to EN 418/EN 60 947-5-5

- Detects wire breaks and earth leakage in the EMERGENCY STOP circuits.
- Cross shorts in the EMERGENCY STOP circuits are detected.

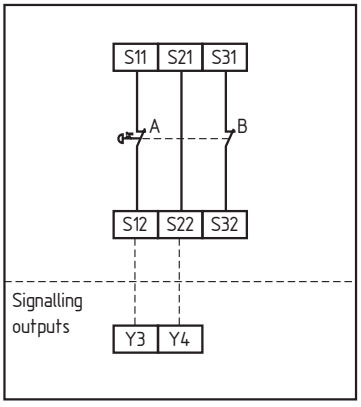

Single-channel guard monitoring to EN 1088
- With positively opening position switch.
- Detects wire break and earth leakage in the guard monitoring circuit.

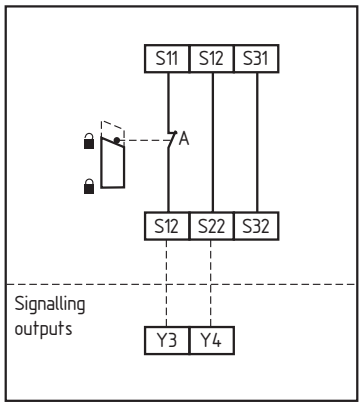

Dual-channel guard monitoring to EN 1088
- With at least one positively opening position switch.
- Detects wire break and earth leakage in the guard monitoring circuits.
- Cross shorts between the guard monitoring circuits are not detected.

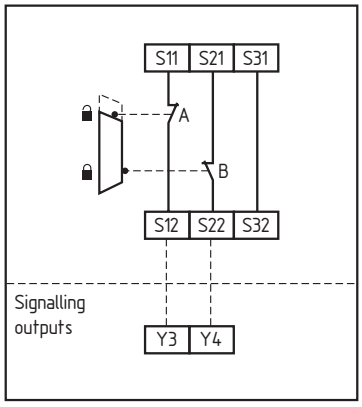

Dual-channel guard monitoring to EN 1088
- With positively opening position switches.
- Detects wire break and earth leakage in the guard monitoring circuits.
- Cross shorts between the guard monitoring circuits are detected.

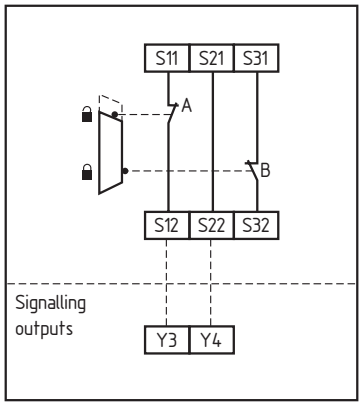

Dual-channel control with safety-orientated P-switching semiconductor components, e.g. AOPDs to EN 61 496

- Detects wire breaks and earth leakage in the control circuits.
- Cross shorts between the monitoring circuits are not detected. Monitoring is performed at sensor level.
- The terminals S11 and S21 are used here to feed the P-switching sensors.

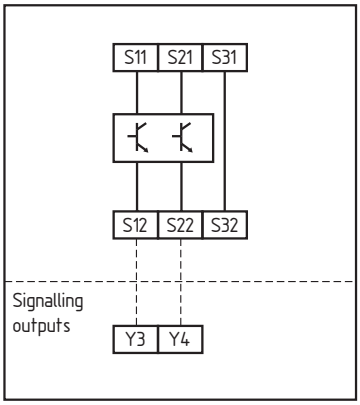

Single-channel control of magnet safety sensor switches to EN 60 947-5-3

- Detects wire breaks and earth leakage in the control circuits.

ATTENTION

It is only admissible to connect magnet safety sensor switches to the analysis circuitry if the requirements of standard EN 60 947-5-3: 1999 are satisfied.
The following minimum technical requirements must be satisfied:
Switching capacity: min. 3 W
Switching voltage: min. 30 VDC
Switching current: min. 100 mA
The requirements are satisfied, for example, by the following Schmersal safety sensor:

- BNS33-02z-2187

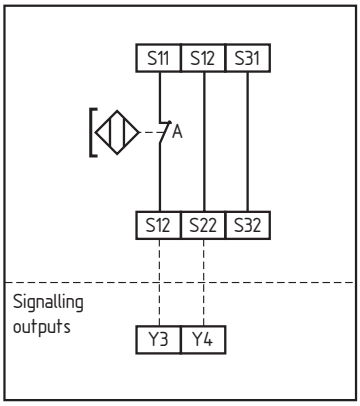

Dual-channel control of magnet safety sensor switches to EN 60 947-5-3

- Detects wire breaks and earth leakage in the control circuits.

ATTENTION

It is only admissible to connect magnet safety sensor switches to the analysis circuitry if the requirements of standard EN 60 947-5-3: 1999 are satisfied.
The following minimum technical requirements must be satisfied:
Switching capacity: min. 3 W
Switching voltage: min. 30 VDC
Switching current: min. 100 mA
The requirements are satisfied, for example, by the following Schmersal safety sensor:

- BNS33-02z-2187

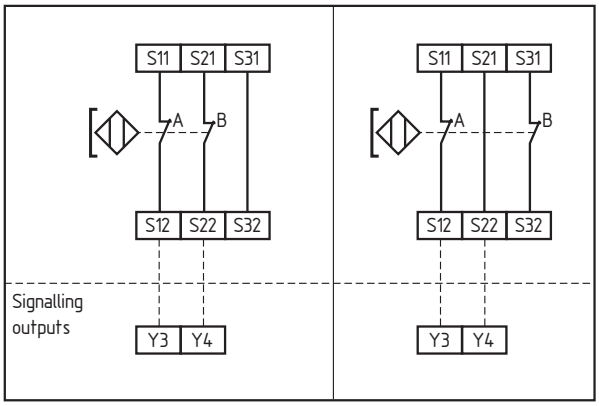

without cross-short detection **with cross-short detection**

Actuator configuration

Single-channel control

- Suitable for contact amplification or contact multiplication by means of relay or contactor with positively driven contacts.

* Feedback loop
If the feedback loop is not required it is to be replaced by a bridge.

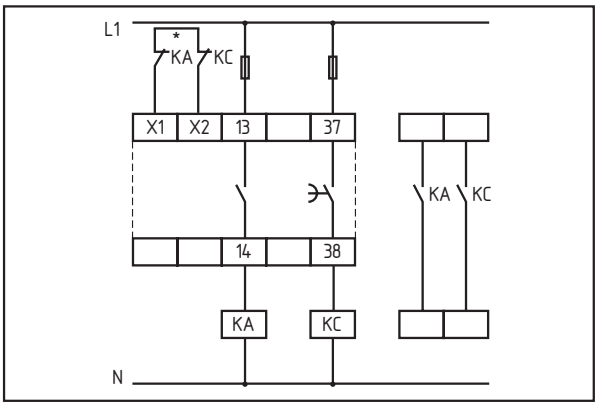

Dual-channel control

- Suitable for contact amplification or contact multiplication by means of relay or contactor with positively driven contacts.

* Feedback loop
If the feedback loop is not required it is to be replaced by a bridge.

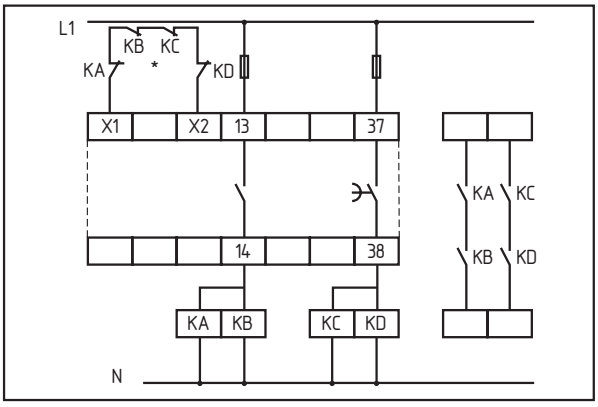

Diversitary control (type SRB 219IT)

- Suitable for contact amplification or contact multiplication by means of relay or contactor with positively driven contacts.

* Feedback loop
If the feedback loop is not required it is to be replaced by a bridge.

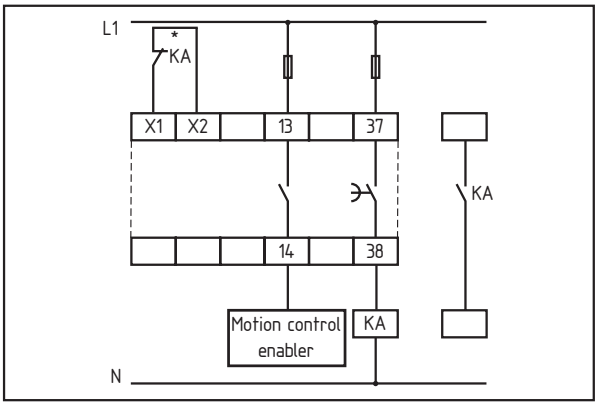

Terminal designation

Voltages

A1	+24 VDC/24 VAC
A2	0 VDC/24 VAC
A1.1	Feed of the semiconductor outputs (24 VDC)

Inputs

S11/S12	Input channel 1
S21/S22	Input channel 2
S31/S32	Input for cross-short detection

Outputs

13/14	First safety enabling output (STOP 0)
23/24	Second safety enabling output (STOP 0)
33/34	Third safety enabling output (STOP 0) (in the case of type SRB 308IT)
37/38	Third safety enabling output (STOP 1), with dropout delay 1 ... 30 sec. (in the case of type SRB 219IT)
41/42	Auxiliary NC contact
53/54	Auxiliary NO contact
RT	Premature termination of the dropout delay

Start

X1/X2	Feedback loop
X3	Supply start
X4	Manual start (reset button)
X5	Automatic start
X6	Time offset to infinity

Signalling outputs

Y1	Operating voltage
Y2	Internal voltage
Y3	Status channel 1
Y4	Status channel 2
Y5	Status feedback loop
Y6	Status start relay (K1)
Y7	Status stop 1 (K4, K5)
Y8	Auxiliary NO contact stop 0 (K2, K3)

Type SRB 308IT

Messages	Operating voltage applied, guard open, feedback loop closed	Operating voltage applied, guard closed, feedback loop closed	Operating voltage applied, guard closed, feedback loop closed, start button pushed	Operating voltage applied, guard closed, feedback loop closed, start button released	Operating voltage applied, guard closed, feedback loop open
Status	**Module off**	**Module off**	**Module started**	**Module started**	**Module on**
Y1 – Operating voltage	1	1	1	1	1
Y2 – Internal voltage	1	1	1	1	1
Y3 – Channel 1 (S11-S12)	0	1	1	1	1
Y4 – Channel 2 (S21-S22, S31-S32)	0	1	1	1	1
Y5 – Feedback loop (X1-X2)	1	1	1	1	0
Y6 – Relay K1	0	0	0	1	0
Auxiliary NC contact 41-42	1	1	1	1 –> 0	0
Auxiliary NO contact 53-54	0	0	0	0 –> 1	1

Type SRB 219IT

Messages	Operating voltage applied, guard open, feedback loop closed	Operating voltage applied, guard closed, feedback loop closed	Operating voltage applied, guard closed, feedback loop closed, start button pushed	Operating voltage applied, guard closed, feedback loop closed, start button released	Operating voltage applied, guard closed, feedback loop open
Status	**Module off**	**Module off**	**Module started**	**Module started**	**Module on**
Y1 – Operating voltage	1	1	1	1	1
Y2 – Internal voltage	1	1	1	1	1
Y3 – Channel 1 (S11-S12)	0	1	1	1	1
Y4 – Channel 2 (S21-S22, S31-S32)	0	1	1	1	1
Y5 – Feedback loop (X1-X2)	1	1	1	1	0
Y6 – Relay K1	0	0	0	1	0
Y7 – Relay K4, K5	0	0	0	0	1
Auxiliary NC contact 41-42	1	1	1	1 –> 0	0
Y8 – Auxiliary NO contact	0	0	0	0 –> 1	1

Safety relay modules
Protect SRB series
– Standard version



2.1 SRB 301LC

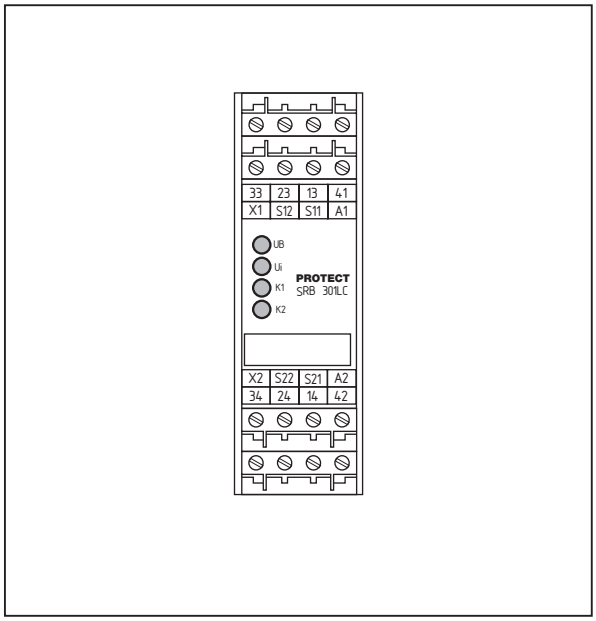

Features

- 1 or 2-channel control
- 3 safety enabling outputs
- 1 feedback output with NC function (floating contact)
- optionally
  – cross-short recognition
- Suitable for signal processing of optionally
  – floating outputs, e.g. emergency stop control devices, interlocking devices, etc.
  – P-switching semiconductor outputs, e.g. AOPD's
- Installed width: 22.5 mm
- Green LED displays for relays K1, K2, U_B and U_i

Dimensions 22.5 x 100 x 121 mm

Type designation		
	Operating voltage	**24 VAC/DC**
	Enabling paths 3 NO/1 NC	**SRB 301LC**

Test symbol (in preparation)

FRG	USA	CAN

Circuit example

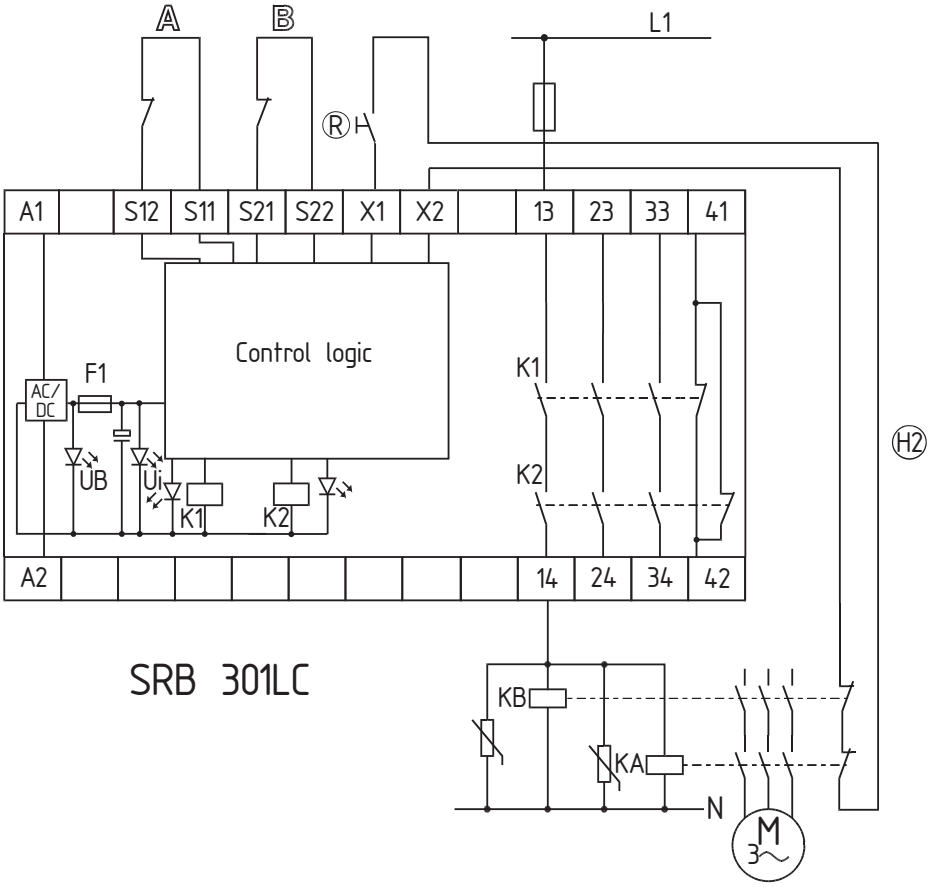

NB

- 2-channel control (example with cross-short recognition) of a guard monitoring system with two contacts A and B, at least one of which is a contact with positive opening; with external reset button ®
- Power level: 2-channel control, suitable for contact amplification and contact multiplication through contactors or relays with positively driven contacts.
- (H2) = feedback loop
- The control circuit detects wire breaks and earth leakage in the monitoring circuit.

2.2 SRB 301ST

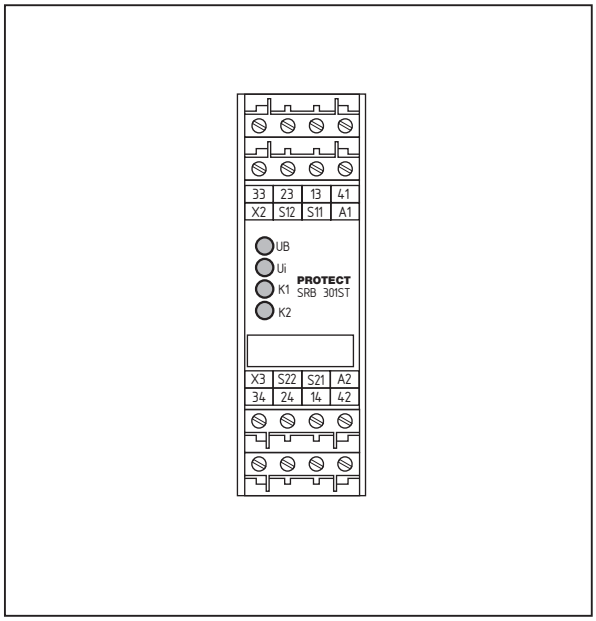

Features

- Plug-in terminals
- 1 or 2-channel control
- 3 safety enabling outputs
- 1 feedback output with NC function (floating contact)
- with hybrid fusing
- optionally
  - cross-short recognition
  - trailing edge
  - automatic reset function
- Suitable for signal processing of optionally
  - floating outputs, e.g. emergency stop control devices, interlocking devices, etc.
  - P-switching semiconductor outputs, e.g. AOPD's
- Installed width: 22.5 mm
- Green LED displays for relays K1, K2, U_B and U_i

Dimensions 22.5 x 100 x 121 mm

Type designation		
	Operating voltage	**24 VAC/DC**
	Enabling paths 3 NO/1 NC	**SRB 301ST**

Test symbol (in preparation)

FRG	USA	CAN

Circuit example

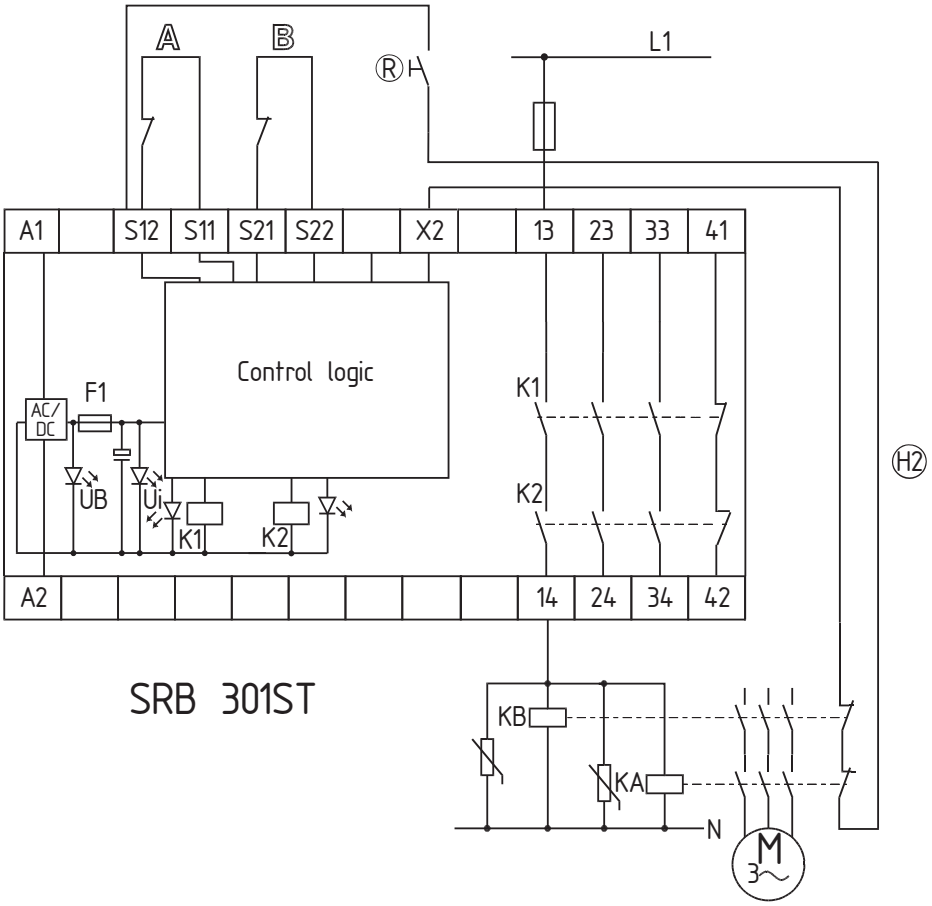

NB

- 2-channel control (example with cross-short recognition) of a guard monitoring system with two contacts A and B, at least one of which is a contact with positive opening; with external reset button ®
- Power level: 2-channel control, suitable for contact amplification and contact multiplication through contactors or relays with positively driven contacts.
- (H2) = feedback loop
- The control circuit detects wire breaks and earth leakage in the monitoring circuit.

2.3 SRB 301AN

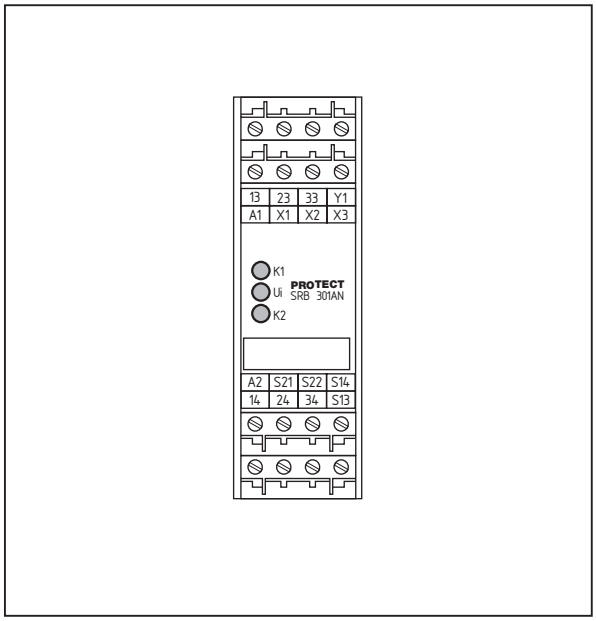

Features

- Plug-in terminals
- 1 or 2-channel control
- 3 safety enabling outputs
- 1 feedback output with NC function (floating contact)
- optionally
  - trailing edge
  - automatic reset function
- Suitable for signal processing of optionally
  - floating outputs, e.g. emergency stop control devices, interlocking devices, etc.
- Current and voltage restriction of the input circuits
- Installed width: 22.5 mm
- Green LED displays for relays K1, K2 and U_i

Dimensions 22.5 x 100 x 121 mm

Type designation		
	Operating voltage	**24 VAC/DC**
	Enabling paths 3 NO/1 NC	**SRB 301AN**

Test symbol (in preparation)

FRG	USA	CAN

Circuit example

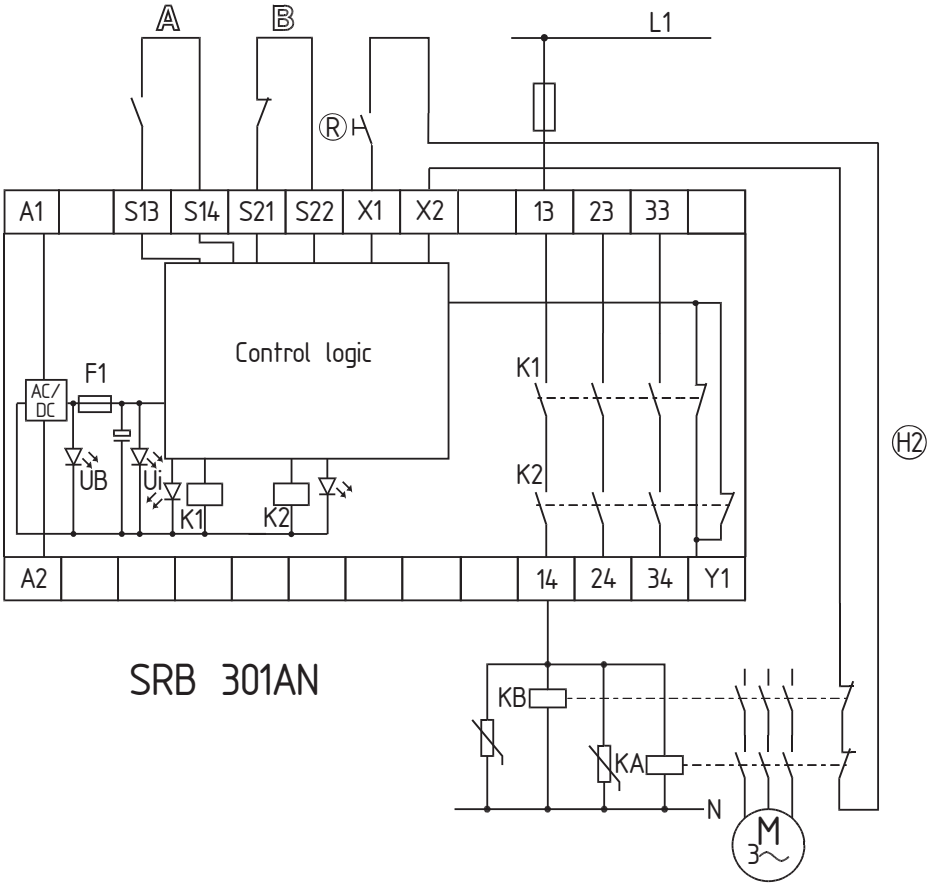

NB

- 2-channel control (example with cross-short recognition) of a guard monitoring system with two contacts A and B, at least one of which is a contact with positive opening; with external reset button ®
- Power level: 2-channel control, suitable for contact amplification and contact multiplication through contactors or relays with positively driven contacts.
- H2 = feedback loop
- The control circuit detects wire breaks and earth leakage in the monitoring circuit.

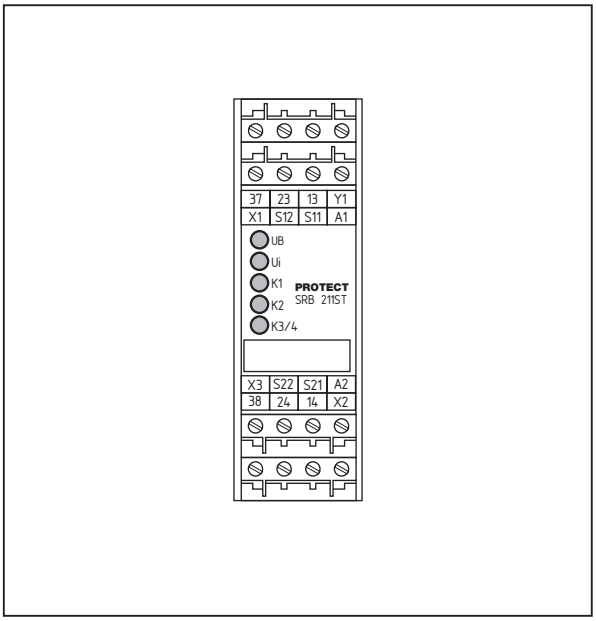

Features

- Plug-in terminals
- 1 or 2-channel control
- 3 safety enabling outputs, of which one with drop-out delay: 1–30 sec.
- 1 feedback output with NC function (floating contact)
- with hybrid fusing
- optionally
  - cross-short recognition
  - trailing edge
  - automatic reset function
- Suitable for signal processing of optionally
  - floating outputs, e.g. emergency stop control devices, interlocking devices, etc.
  - P-switching semiconductor outputs, e.g. AOPD's
- Installed width: 22.5 mm
- Green LED displays for relays K1, K2, K3/K4, U_B and U_i

Dimensions 22.5 x 100 x 121 mm

Type designation		
	Operating voltage	**24 VAC/DC**
	Enabling paths 2 NO/1 NO ⊰/1 NC	**SRB 211ST**
Test symbol (in preparation)	FRG USA CAN	

Circuit example

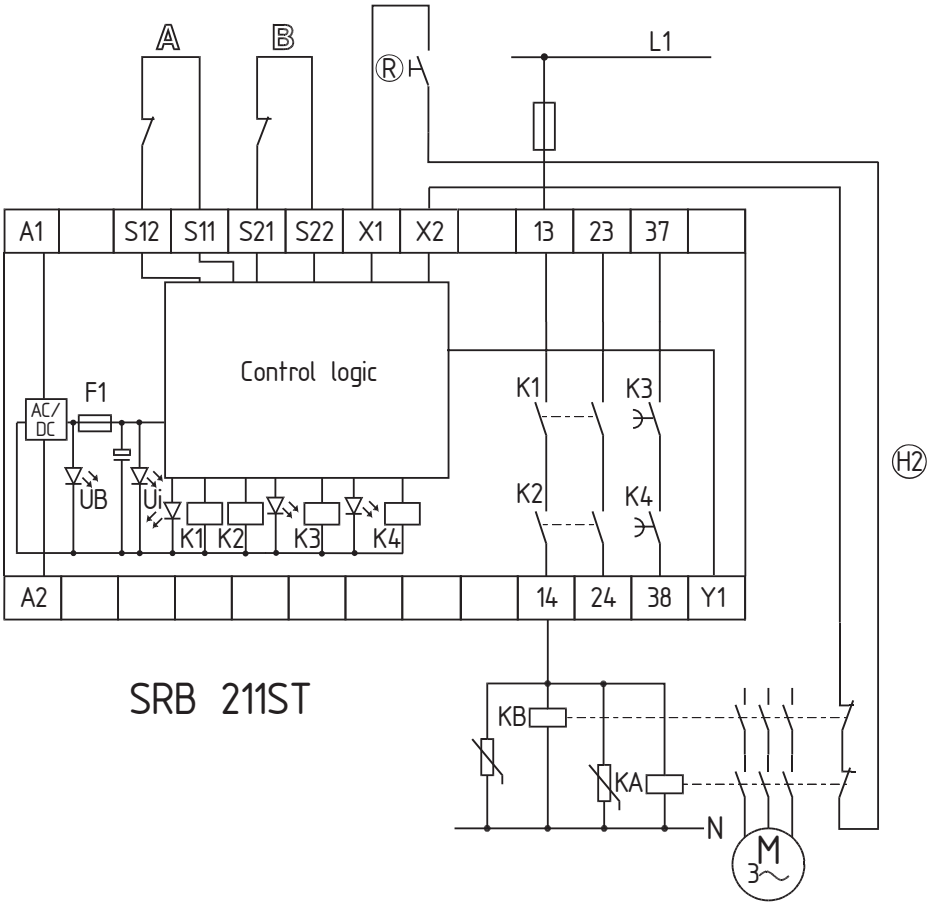

NB

- 2-channel control (example with cross-short recognition) of a guard monitoring system with two contacts A and B, at least one of which is a contact with positive opening; with external reset button ®
- Power level: 2-channel control, suitable for contact amplification and contact multiplication through contactors or relays with positively driven contacts.
- (H2) = feedback loop
- The control circuit detects wire breaks and earth leakage in the monitoring circuit.

Time delay

- The time-delayed safety enabling output 37/38 can be set with a dropout delay of between 1 to 30 seconds (see setting instructions).
- The safety enabling output 37/38 corresponds to STOP category 1 to EN 60 204-1. The safety enabling outputs 13/14 and 23/24 correspond to STOP category 0 to EN 60 204-1.
- The dropout delay can be set by means of potentiometer accessible on the front side of the housing.

	SRB 301LC	SRB 301ST
Operating voltage	24 VDC –15%/+20%, residual ripple max. 10% 24 VAC –15%/+10%	
Frequency range	50/60 Hz (with AC operating voltage)	
Fuse of operating voltage	internal F1: T 1.25 A	internal electronic fuse F1, tripping current > 0.6 A, reset after interruption of supply voltage
Power consumption	max. 1.7 W, 1.9 VA	max. 2.4 W; 3.8 VA
Voltage and current restriction of the control circuits		26 VDC/250 mA
Switching capacity of the enabling contacts	230 VAC, 6 A ohmic (inductive with suitable suppressor circuit)	230 VAC, 6 A ohmsch (inductive with suitable suppressor circuit)
Fuse of the enabling contacts	6 A slow-blowing	6 A slow-blowing
Switching capacity of the auxiliary contacts	24 VDC, 2 A	24 VDC, 2 A
Fuse of the auxiliary contacts	2 A slow-blowing	2 A slow-blowing
Switching capacity of the signalling outputs		
Fuse of the signalling outputs		
Utilisation categories	AC 15/DC 13: EN 60 947-5-1	
Pickup delay	≤ 30 ms	≤ 200 ms
Dropout delay	≤ 50 ms	≤ 20 ms
Varistor circuitry*		Shorter dropout delay
Contact materials/contacts	AgSnO, self-cleaning, positively driven	
Contact resistance	max. 100 mOhm in new state	
Air clearance and creepage distance	DIN VDE 0110-1 (04.97), 4 kV/2	
Cable connections	Self-lifting screw terminals min. 0.2 mm^2, max. 2.5 mm^2, strand or multicore with wire end ferrule	Self-lifting plug-in screw terminals min. 0.2 mm^2, max. 2.5 mm^2, strand or multicore with wire end ferrule
Dimensions	h/b/d 100 mm/22.5 mm/121 mm	
Weight	230 g	240 g
Ambient operating temperature	–25 °C ... 45 °C (derating curve upon request)	
Mechanical life	10^7 switching cycles	
Terminal markings	DIN EN 50 005/DIN 50 013	

* upon request

	SRB 301AN	SRB 211ST
Operating voltage	24 VDC –15%/+20%, residual ripple max. 10% 24 VAC –15%/+10%	
Frequency range	50/60 Hz (with AC operating voltage)	
Fuse of operating voltage	internal electronic fuse F1, tripping current > 0.6 A, reset approx. 1 second	internal electronic fuse F1, tripping current > 1 A, reset after interruption of supply voltage
Power consumption	max. 1.8 W, 2.5 VA, plus signalling output Y1	max. 5.1 W, 5.7 VA, plus signalling output Y1
Voltage and current restriction of the control circuits	26 VDC/100 mA	
Switching capacity of the enabling contacts	230 VAC, 6 A ohmic (inductive with suitable suppressor circuit)	230 VAC, 4 A ohmic (inductive with suitable suppressor circuit), 13/14, 23/24: AC 15: 250 V/1.5 A, DC 13: 24 V/1.2 A 37/38: AC 15: 250 V/3 A, DC 13: 24 V/2 A
Fuse of the enabling contacts	6 A slow-blowing	4 A slow-blowing
Switching capacity of the auxiliary contacts		
Fuse of the auxiliary contacts		
Switching capacity of the auxiliary contacts	24 VDC, 100 mA	24 VDC, 100 mA
Fuse of the signalling outputs	internal electronic fuse, tripping current > 500 mA	internal electronic fuse, tripping current > 100 mA
Utilisation categories	AC 15/DC 13: EN 60 947-5-1	
Pickup delay	≤ 30 ms	≤ 40 ms
Dropout delay	≤ 20 ms	≤ 40 ms
Varistor circuitry*	Shorter dropout delay	
Contact material/contacts	AgSnO, self-cleaning, positively driven	
Contact resistance	max. 100 mOhm in new state	
Air clearance and creepage distance	DIN VDE 0110-1 (04.97), 4 kV/2	
Cable connections	Plug-in self-lifting screw terminals min. 0.2 mm^2, max. 2.5 mm^2, strand or multicore with wire end ferrule	Plug-in self-lifting screw terminals min. 0.2 mm^2, max. 2.5 mm^2, strand or multicore with wire end ferrule
Dimensions	h/b/d 100 mm/22.5 mm/121 mm	
Weight	235 g	255 g
Ambient operating temperature	–25 °C ... 45 °C (derating curve upon request)	
Mechanical life	10^7 switching cycles	
Terminal markings	DIN EN 50 005/DIN 50 013	

* upon request

Notes

The following selection of applications is intended to provide users with assistance on which functionalities PROTECT SRBs offer.

The circuit examples are suggestions which do not (cannot), however, release the user from his own responsibility to check the circuitry carefully in terms of its suitability for the individual case.

A CD ROM is provided with this catalogue as an additional service with the aid of which a complete connection diagram can be compiled from the different individual functionalities.

Since EN 954-1 does not require an overall control category for safety circuits, the control category (SK) is shown separately for upstream and downstream periphery as well as for the SRB module itself.

Example: monitored start / without cross-short recognition / dual-channel control

Monitored start | **Without cross-short recognition** | **Dual-channel control**

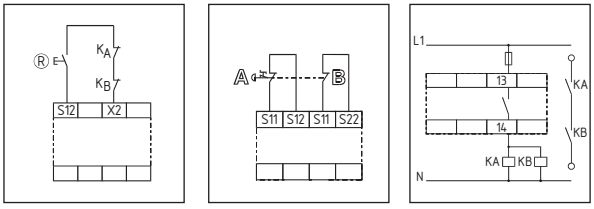

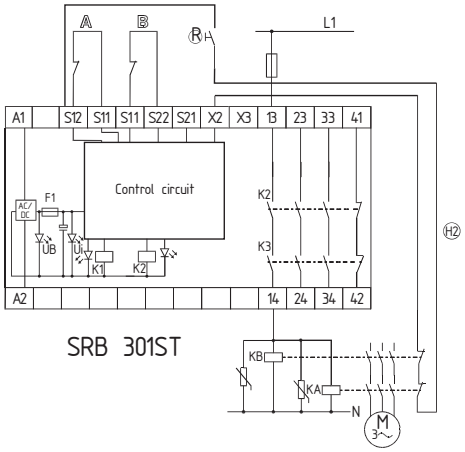

Control category:
- **Sensor configuration SK3**
- **SRB module SK4**
- **Actuator level SK4**

1.4 Selection of applications

Start configuration
External reset button . . . . . Page 36
Automatic . . . . . Page 36

Sensor configuration
EMERGENCY-STOP . . . . . Page 37
Guard . . . . . Page 38
P-switching semiconductor . . . . . Page 39
Magnet safety sensors . . . . . Page 39

Actuator configuration/contact multiplication (KV)
Single-channel . . . . . Page 40
Dual-channel . . . . . Page 40
Diversitary . . . . . Page 40

Start configuration

External reset button

- The external reset button is connected to terminals X1-X2, S12-X2.
- The feedback loop is connected in series to the reset button.

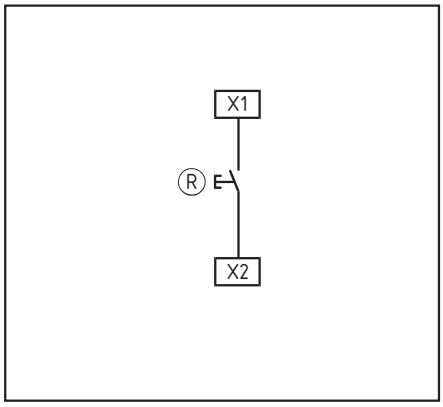

SRB 301LC, SRB 301AN, SRB 211ST

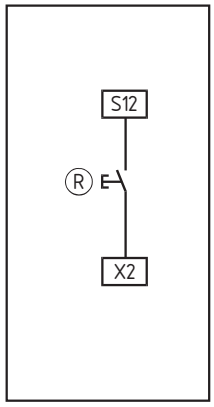

SRB 301ST

Automatic start

- Programming to automatic start by means of connecting the feedback loop to terminals X1-X3, X1-X2, S12-X3. If the feedback loop is not required it is to be replaced by a bridge.
- If the operating mode “automatic start” is used, an automatic restart after standstill in case of emergency to EN 60 204-1 Section 9.2.5.4.2 and 10.8.3 is to be prevented by higher ranking system.

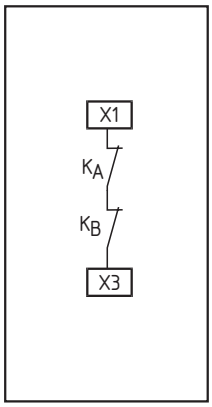

SRB 301AN, SRB 211ST

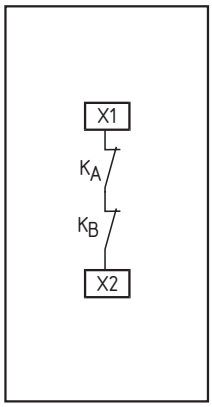

SRB 301LC

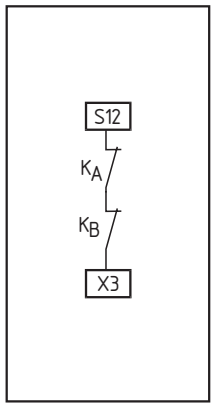

SRB 301ST

Sensor configuration

Single-channel EMERGENCY STOP circuit to EN 418/EN 60 947-5-5

- Detects wire break and earth leakage in EMERGENCY STOP circuit.

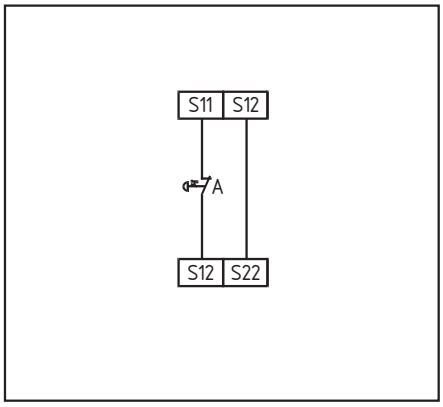

SRB 301LC, SRB 301ST, SRB 211ST

Dual-channel EMERGENCY STOP circuit to EN 418/EN 60 947-5-5

- Detects wire break and earth leakage in the EMERGENCY STOP circuits.
- Cross shorts in the EMERGENCY STOP circuits are not detected.

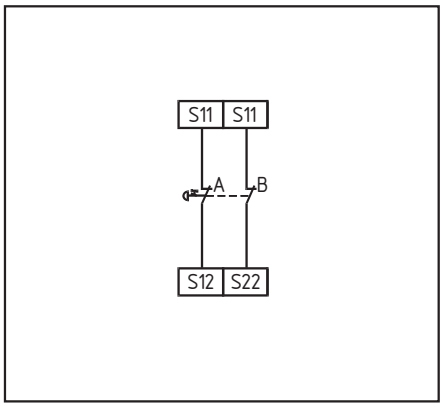

SRB 301LC, SRB 301ST, SRB 211ST

Dual-channel EMERGENCY STOP circuit to EN 418/EN 60 947-5-5

- Detects wire breaks and earth leakage in the EMERGENCY STOP circuits.
- Cross shorts in the EMERGENCY STOP circuits are detected.

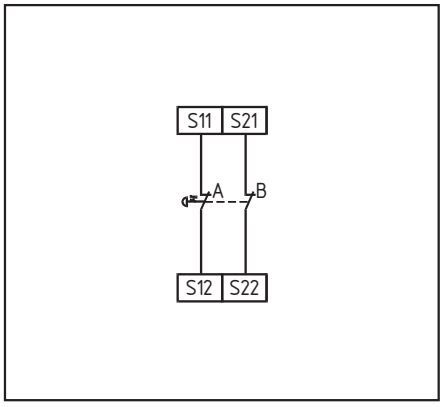

SRB 301LC, SRB 301ST, SRB 211ST

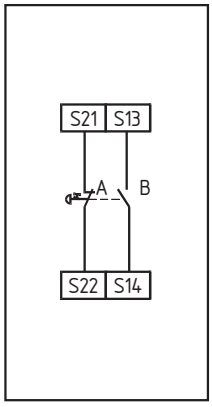

SRB 301AN

Single-channel guard monitoring to EN 1088
- With positively opening position switch.
- Detects wire break and earth leakage in the guard monitoring circuit.

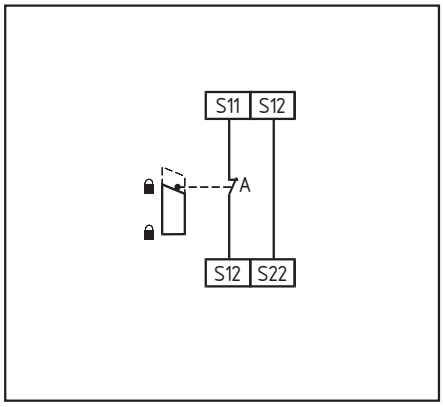

SRB 301LC, SRB 301ST, SRB 211ST

Dual-channel guard monitoring to EN 1088
- With at least one positively opening position switch.
- Detects wire break and earth leakage in the guard monitoring circuits.
- Cross shorts between the guard monitoring circuits are not detected.

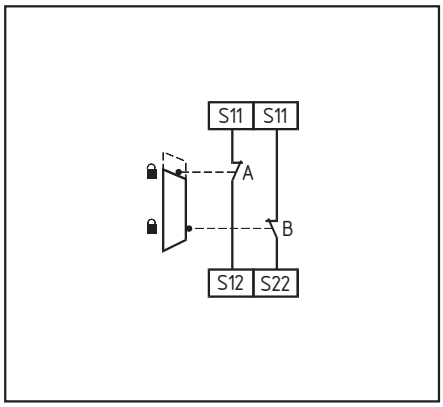

SRB 301LC, SRB 301ST, SRB 211ST

Dual-channel guard monitoring to EN 1088
- With positively opening position switches.
- Detects wire break and earth leakage in the guard monitoring circuits.
- Cross shorts between the guard monitoring circuits are detected.

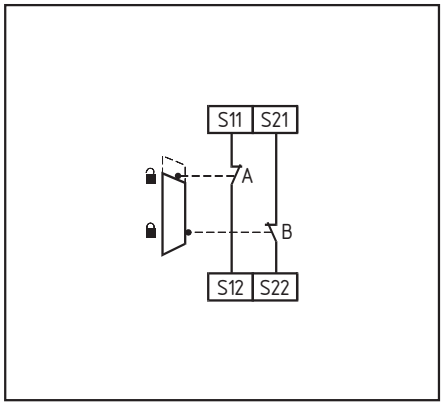

SRB 301LC, SRB 301ST, SRB 211ST

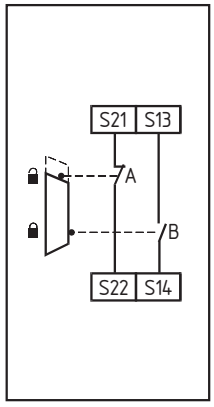

SRB 301AN

Dual-channel control with safety-orientated P-switching semiconductor components, e.g. AOPDs to EN 61496

- Detects wire breaks and earth leakage in the control circuits.
- Cross shorts between the monitoring circuits are not detected. Monitoring is performed at sensor level.
- The terminal S11 is used here to feed the P-switching sensors.

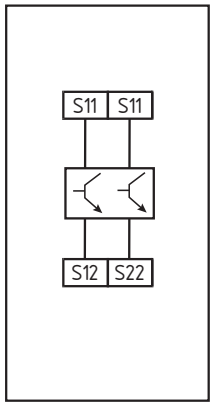

SRB 301LC, SRB 301ST, SRB 211ST

ATTENTION

It is only admissible to connect magnet safety sensor switches to the analysis circuitry if the requirements of standard EN 60947-5-3: 1999 are satisfied.
The following minimum technical requirements must be satisfied:

Switching capacity:	min. 3 W
Switching voltage:	min. 30 VDC
Switching current:	min. 100 mA (SRB 301AN)
	min. 250 mA (SRB 301ST)

The requirements are satisfied, for example, by the following Schmersal safety sensors:

- SRB 301 AN:
  - BNS33-11z, BNS33-11z-2063
  - BNS250-11z
  - BNS120-11z
  - BNS180-11z
  - BNS303-11z
- SRB 301ST:
  - BNS33-02z-2187

Dual-channel control of magnet safety sensor switches to EN 60947-5-3

- Detects wire breaks, earth leakage and cross shorts in the control circuits.

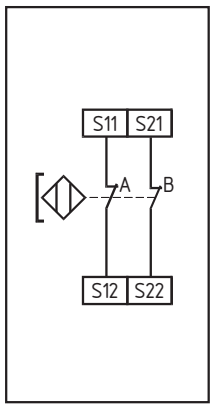

SRB 301ST

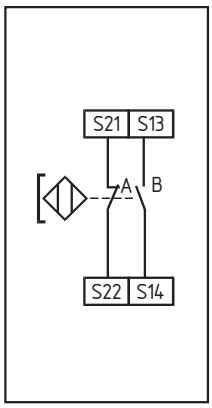

SRB 301AN

Actuator configuration

Single-channel control

- Suitable for contact amplification or contact multiplication by means of relay or contactor with positively driven contacts.

* Feedback loop
If the feedback loop is not required it is to be replaced by a bridge.

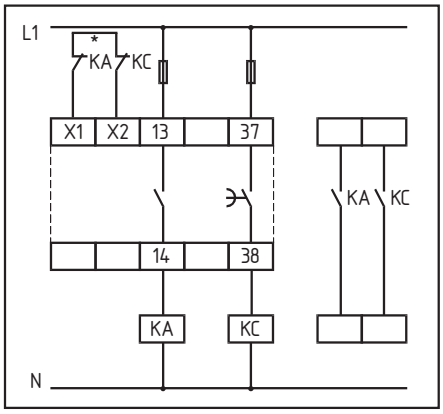

SRB 301LC, SRB 301AN, SRB 211ST

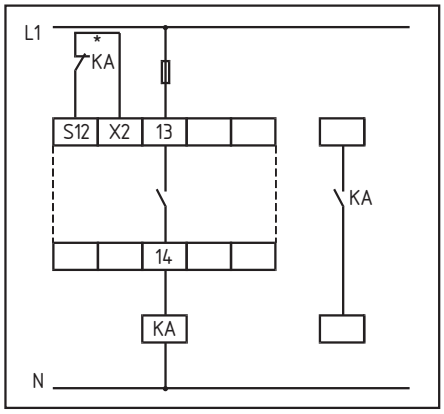

SRB 301ST

Dual-channel control

- Suitable for contact amplification or contact multiplication by means of relay or contactor with positively driven contacts.

* Feedback loop
If the feedback loop is not required it is to be replaced by a bridge.

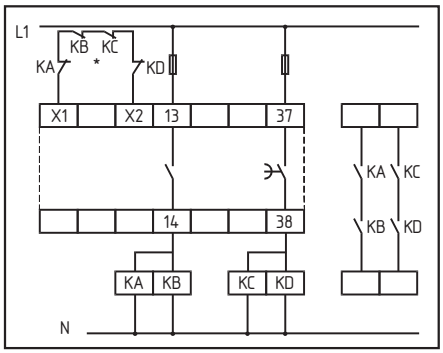

SRB 301LC, SRB 301AN, SRB 211ST

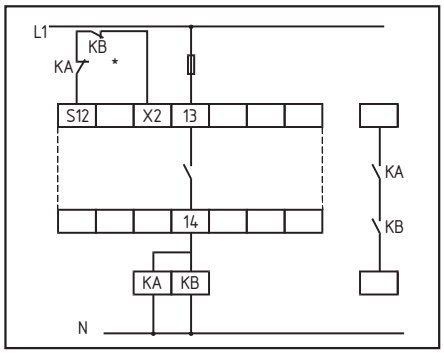

SRB 301ST

Diversitary control

- Suitable for contact amplification or contact multiplication by means of relay or contactor with positively driven contacts.

* Feedback loop
If the feedback loop is not required it is to be replaced by a bridge.

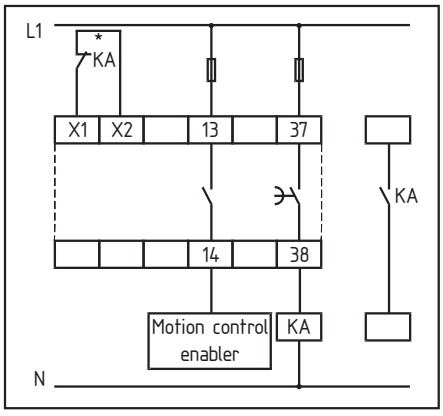

SRB 211ST

Terminal designation

Voltages

A1	+24 VDC/24 VAC
A2	0 VDC/24 VAC

Inputs

S11/S12	Input channel 1 (+)
S11/S22	Input channel 2 (+)
S13/S14	Input channel 1 (+)
S21/S22	Input channel 2 (–)

Outputs

13/14	First safety enabling output (STOP 0)
23/24	Second safety enabling output (STOP 0)
33/34	Third safety enabling output (STOP 0)
37/38	Third safety enabling output (STOP 1),
41/42	Auxiliary NC contact

Start

X1/X2	Feedback loop, manual start (reset button)
S12/X2	Feedback loop, manual start (reset button) with type SRB 301ST
X1/X2	Feedback loop, automatic start with type SRB 301LC
X1/X3	Feedback loop, automatic start with type SRB 301AN, SRB 211ST
S12/X3	Feedback loop, automatic start with type SRB 301ST

Signalling outputs

Y1	Auxiliary NC contact

Notes

Two-hand relay modules
Protect SRB series



3.1 SRB 201ZH

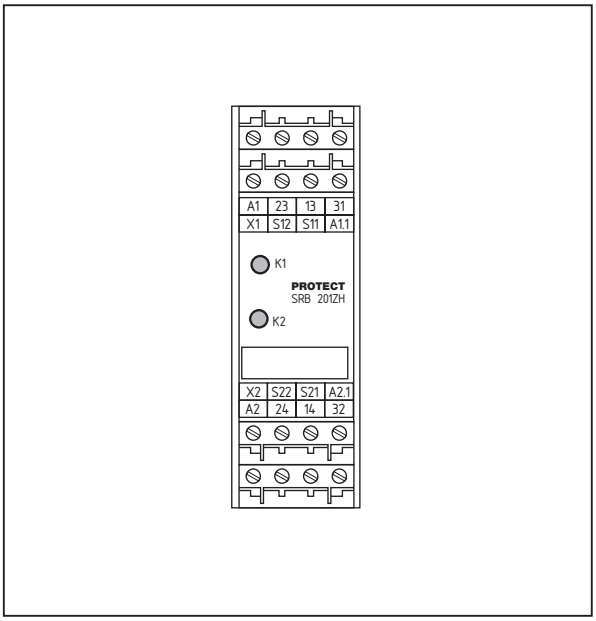

Dimensions 22.5 x 100 x 121 mm

Dimensions

- Two-hand module to DIN EN 574 (1997) type III C
- Plug-in terminals
- 2 safety enabling outputs
- 1 feedback output with NC function (floating contact)
- Electronic fuse
- Installed width: 22.5 mm
- Green LED displays for relays K1 and K2

Type designation	Operating voltage	**24 VDC**
	Enabling paths 2 NO/1 NC	**SRB 201ZH**
Test symbol (in preparation)	FRG USA CAN	

Circuit example

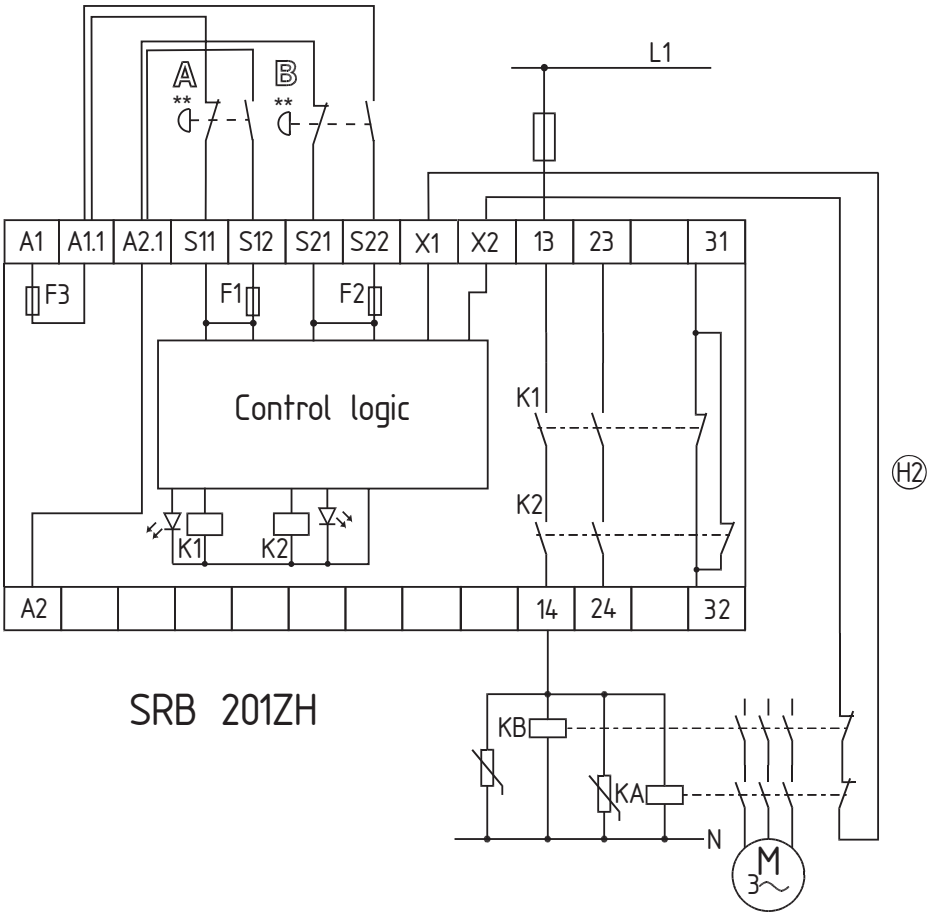

NB

- 2-channel control with two contacts A and B
- The NC contact of the buttons A and B must have opened before the NO contact closes. No overlapping contacts since otherwise the fuses F1 and F2 would trigger.
- Power level: 2-channel control, suitable for contact amplification and contact multiplication through contactors or relays with positively driven contacts.
- (H2) = feedback loop
- The control circuit detects wire breaks and earth leakage in the monitoring circuit.

	SRB 201ZH
Operating voltage	24 VDC –15%/+10%, residual ripple max. 10%
Fuse of operating voltage	internal electronic fuse F1, F2, tripping current > 0.2 A, internal electronic fuse F3, tripping current > 0.6 A
Power consumption	max. 1.2 W
Switching capacity of the enabling contacts	230 VAC, 6 A ohmic (inductive with suitable suppressor circuit)
Fuse of the enabling contacts	6 A slow-blowing
Switching capacity of the auxiliary contacts	24 VDC, 2 A
Fuse of the auxiliary contacts	2 A slow-blowing
Utilisation categories	AC 15/DC 13: EN 60 947-5-1
Pickup delay	≤ 50 ms
Dropout delay	≤ 30 ms
Contact material/contacts	AgSnO, self-cleaning, positively driven
Contact resistance	max. 100 mOhm in new state
Air clearance and creepage distance	DIN VDE 0110-1 (04.97), 4 kV/2
Cable connections	Plug-in self-lifting screw terminals min. 0.2 mm², max. 2.5 mm², strand or multicore with wire end ferrule
Dimensions	h/b/d 100 mm/22.5 mm/121 mm
Weight	200 g
Ambient operating temperature	–25 °C ... 45 °C (derating curve upon request)
Mechanical life	10^7 switching cycles
Terminal markings	DIN EN 50 005/DIN 50 013

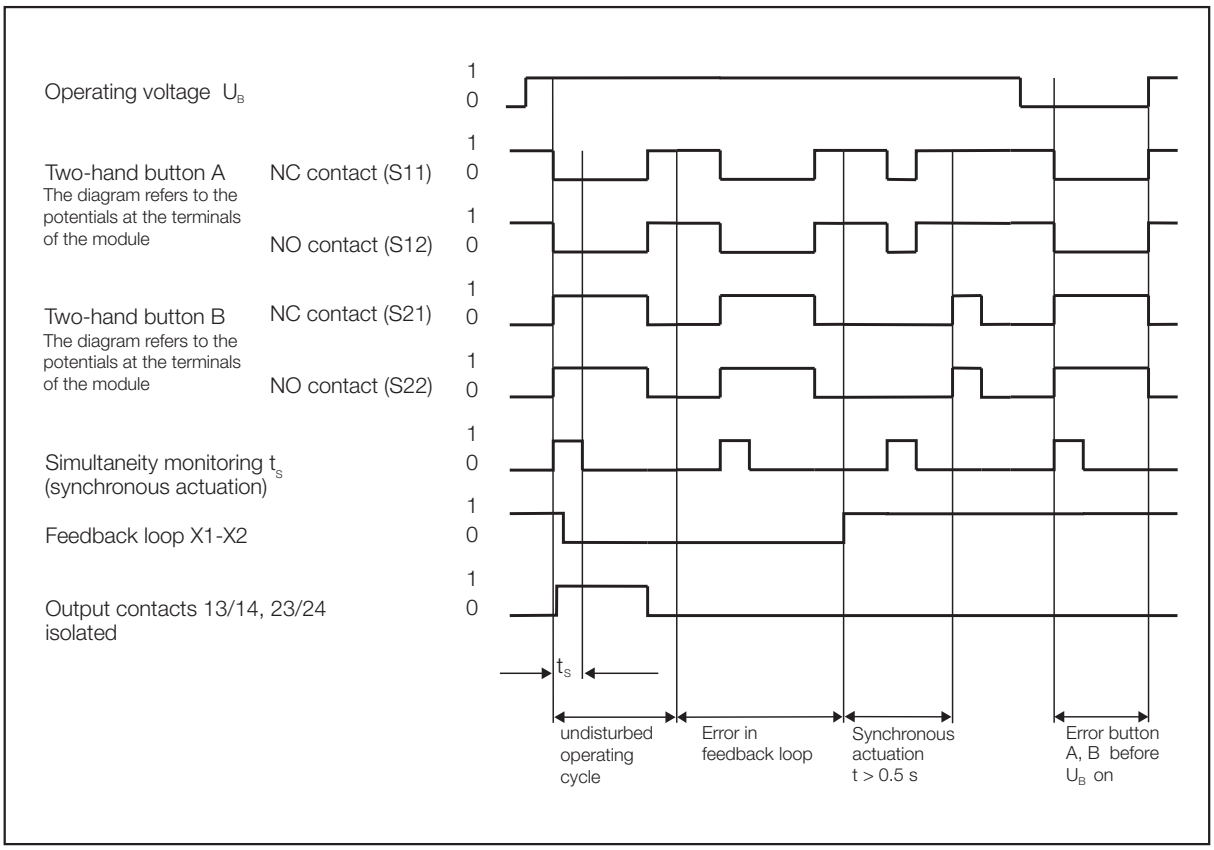

Start/sensor configuration

Two-hand circuit to DIN EN 574 and EN 60 204-1

- Malfunctions of every button contact as well as earth and cross shorts are detected.
- Feedback loop: the safety-related function of external positively driven contactors is monitored by a series circuit of the NC contacts with the terminals X 1 and X2. In release state this circuit must be closed.
- Safety category III C to DIN EN 574 (02.97)

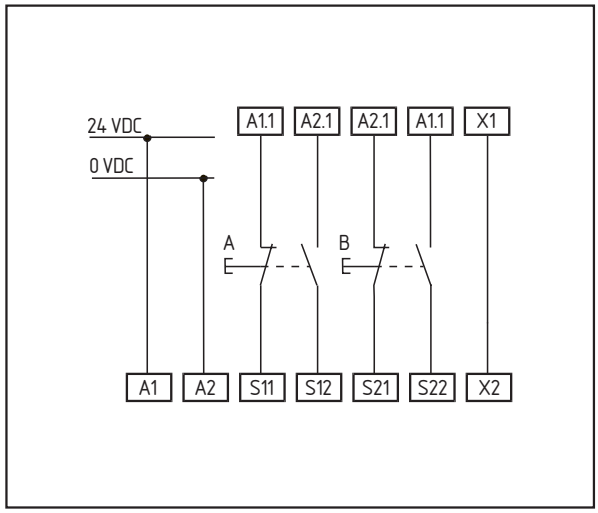

Circuit example control level/ two hand circuit to DIN EN 574 and EN 60 204-1

- Malfunctions of every button contact as well as earth and cross shorts are detected.
- Feedback loop: the safety-related function of external positively driven contactors is monitored by a series circuit of the NC contacts with the terminals X 1 and X2. In release state this circuit must be closed.
- Safety category III C to DIN EN 574 (02.97)

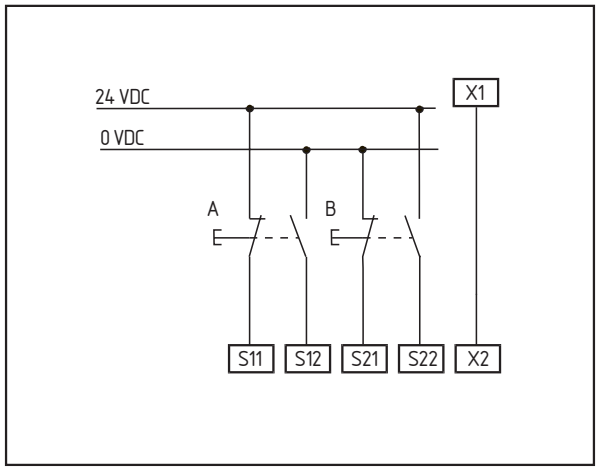

Actuator configuration

Single-channel control

- Suitable for contact amplification or contact multiplication by means of relay or contactor with positively driven contacts.

* Feedback loop
If the feedback loop is not required it is to be replaced by a bridge.

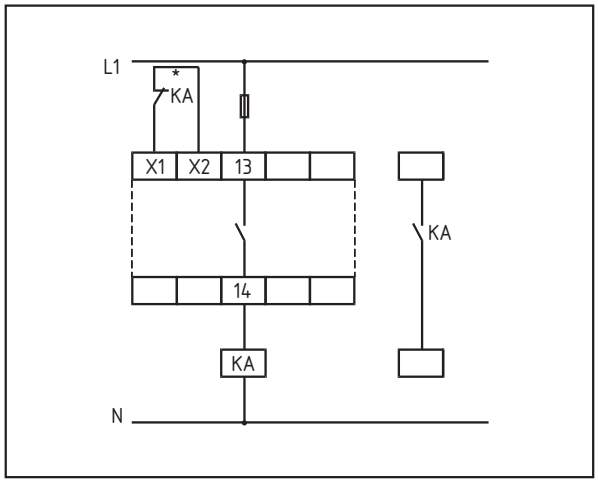

Dual-channel control

- Suitable for contact amplification or contact multiplication by means of relay or contactor with positively driven contacts.

* Feedback loop
If the feedback loop is not required it is to be replaced by a bridge.

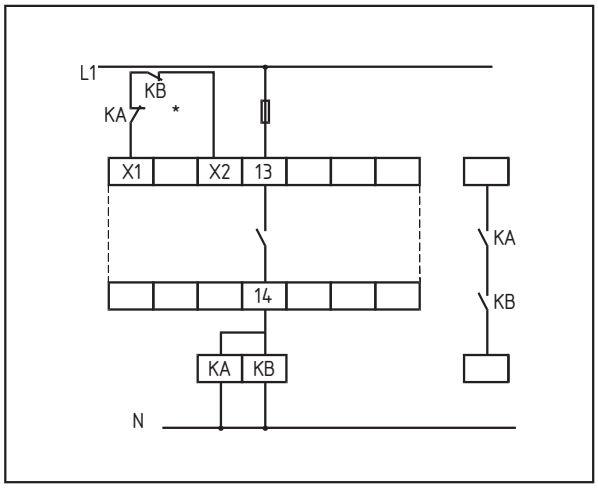

Terminal designation

Voltages

A1	+24 VDC
A2	0 VDC

Inputs

A1.1/S11	Input 1st actuator (NC contact)
A2.1/S12	Input 1st actuator (NO contact)
A1.1/S22	Input 2nd actuator (NO contact)
A2.1/S21	Input 2nd actuator (NC contact)

Outputs

13/14	First safety enabling output (STOP 0)
23/24	Second safety enabling output (STOP 0)
31/32	Auxiliary NC output

Notes

Symbol key

Sideways moving guard 

Rotating guard 

Removable guard 

EMERGENCY STOP function 

Guard closed 

Guard open 

Control category 1 to EN 954-1 

Control category 2 to EN 954-1 

Control category 3 to EN 954-1 

Control category 4 to EN 954-1 

Category 0 to IEC 60 204-1 

Category 1 to IEC 60 204-1 

Totally insulated 

NC contact with positive operation 

Human protection function 

Positive operation path/angle 

Latching point 

Cable break monitoring 

Cable pull monitoring 

Confirmed 

Unconfirmed 

Auxiliary unlocking with male triangular wrench 

Wrench size 

Explosion protected 

Inductive proximity switch 

Magnetic safety sensor,
contact-free safety sensor 

Switch off 

Switch on 

On/off switch 

Unlock latching 

Reset button 

Start button 

Test button 

Guard may not be opened
after unlocking 

Feedback loop increases safety
but not control category 

Refer to . If no connection,
 must be considered 

Only in the case of AES ...5
without start-up testing:
when the EMERGENCY STOP button is unlocked,
the enabling output is given automatically 

The bar must be locked at least
5 seconds after locking the guard 

Button for enabling output on/off

Additional standstill signal

Lever spring point

Restart button

SAQ approval, Sweden

SA approval, Sweden

UL approval, USA

CSA approval, Canada

TÜV prototype tested

Approval Denmark

BG prototype tested

SUVA approval, Switzerland

Approval Australia:
Division of Inspection Services

German agencies

Headquarters
K.A. Schmersal GmbH
Industrielle Sicherheitsschaltsysteme
Postfach 24 02 63, 42232 Wuppertal
Möddinghofe 30
42279 Wuppertal
Telephone: +49-(0) 2 02-64 74-0
Facsimile: +49-(0) 2 02-64 74-1 00
E-Mail: info@schmersal.de
Internet: www.schmersal.de

01 **Hamburg**
K.A. Schmersal GmbH
Geschäftsstelle Hamburg
Zunftstraße 8
21244 Buchholz i.d.N.
Telephone: +49-(0) 41 81-9 22 0-0
Facsimile: +49-(0) 41 81-9 22 0-20
E-Mail: gshamburg@schmersal.de

02 **Berlin**
KSA Komponenten der Steuerungs- und Automatisierungstechnik GmbH
Buchholzer Str. 62-65
13156 Berlin
Telephone: +49-(0) 30-47 48 24 00
Facsimile: +49-(0) 30-47 48 24 05
E-Mail: info@ksa-gmbh.de
Internet: www.ksa-gmbh.de

03 **Hanover**
ELTOP GmbH
Robert-Bosch-Straße 8
30989 Gehrden
Telephone: +49-(0) 51 08-92 73 20
Facsimile: +49-(0) 51 08-92 73 21
E-Mail: eltop@eltop.de
Internet: www.eltop.de

04 **Münster**
K.A. Schmersal GmbH
Geschäftsstelle Münster
Am Vechte Ufer 22
48629 Metelen
Telephone: +49-(0) 25 56-9 38 30
Facsimile: +49-(0) 25 56-93 83 73
E-Mail: gsmuenster @schmersal.de

05 **Köln**
Stollenwerk
Technisches Büro GmbH
Scheuermühlenstraße 40
51147 Köln
Telephone: +49-(0) 22 03-9 66 20-0
Facsimile: +49-(0) 22 03-9 66 20-30
E-Mail: info@stollenwerk.de

14 **Ruhr area**
K W S Elektronik Schumacher
Saarstr. 19a
53919 Weilerswist
Telephone: +49-(0) 22 54-33 80
Facsimile: +49-(0) 22 54-18 58
E-Mail: k-w-s-@t-online.de

12 **Siegen**
Siegfried Klein
Elektro-Industrie-Vertretungen
Schloßblick 38
57074 Siegen
Telephone: +49-(0) 2 71-67 78
Facsimile: +49-(0) 2 71-67 70
E-Mail: info@sk-elektrotechnik.de

16 **Frankfurt**
K.A. Schmersal GmbH
Geschäftsstelle Frankfurt
Kilianstädter Straße 38
61137 Schöneck
Telephone: +49-(0) 61 87-9 09 56-0
Facsimile: +49-(0) 61 87-9 09 56-6
E-Mail: gsfrankfurt@schmersal.de

International agencies

Argentina – Argentinien
Roberto Pasqualini Representante
Av. Rivadavia 1321 – Piso 8°. Ofic. 32
1033 Buenos Aires
Telephone: +54-11-43 83-61 05
Facsimile: +54-11-43 83-61 05
E-Mail: whbo@attglobal.net

Australia – Australien
NHP Electrical Engineering
Products Pty. Ltd.
43 - 67 River Street
PO Box 199
Richmond 3121
Melbourne, Victoria
Telephone: +61-(0) 3-94 29 29 99
Facsimile: +61-(0) 3-94 29 10 75
E-Mail: products@nhp.com.au
Internet: www.nhp.com.au

Austria – Österreich
AVS-Schmersal Vertriebs Ges. m.b.H.
Biróstraße 17
1232 Wien
Telephone: +43-(0) 1-6 10 28
Facsimile: +43-(0) 1-6 10 28-1 30
E-Mail: infoservice @avs-schmersal.co.at
Internet: www.avs-schmersal.co.at

Belgium – Belgien
Schmersal Belgium NV/SA
Nieuwlandlaan 16B
Industriezone B413
3200 Aarschot
Telephone: +32-(0) 16-57 16 18
Facsimile: +32-(0) 16-57 16 20
E-Mail: info@schmersal.be

Brazil – Brasilien
ACE Schmersal
Eletroeletrônica Industrial Ltda.
Rodovia Boituva – Porto Feliz, Km 12
Vila Esplanada – CEP 18550-000
Boituva – SP
Telephone: +55-(0) 15-2 63-98 66
Facsimile: +55-(0) 15-2 63-98 90
E-Mail: export @aceschmersal.com.br
Internet: www.aceschmersal.com.br

Chile – Chile
NDU Ingeneria
Santa Elisa 498
7160269 La Cisterna
Santiago de Chile
Telephone: +56-2-5 26-66 46
Facsimile: +56-2-5 26-50 46
E-Mail: matelec@ndu.cl

Colombia – Kolumbien
Cimpex Ltda.
Apartado Aereo 2429
Medellin
Telephone: +57-4-2 51-59 72
Telephone: +57-4-2 51-59 87
Facsimile: +57-4-2 51-46 08
E-Mail: cimpex@supernet.com.co

Costa Rica – Costa Rica
Euro-Tec, S.A.
Apartado Postal 477
1250 Escazú
San José
Telephone: +5 06-3 84-78 69
Telephone: +5 06-2 31-41 01
Facsimile: +5 06-2 96-15 42
E-Mail: eurotec@sol.racsa.co.cr

PR China – VR China
Schmersal Industrial Switchgear
(Shanghai) Co. Ltd.
Central Plaza 1001
Huang Pi Bei Road 227
200003 Shanghai
Telephone: +86-21-63 75 82 87
Facsimile: +86-21-63 75 82 97
E-Mail: schmersl @public3.sta.net.cn
Internet: www.schmersal.com.cn

Czech Republic – Tschechische Republik
Mercom Componenta spol. s.r.o.
Ruská 67
100 00 Praha 10
Telephone: +4 20-(0) 2-67 31 46 40
Telephone: +4 20-(0) 2-67 31 46 41
Facsimile: +4 20-(0) 2-71 73 32 11
E-Mail: mercom@bohem-net.cz

Denmark – Dänemark
Schmersal Danmark A/S
Lindegårdsvej 17A
2920 Charlottenlund
Telephone: +45-70 20 90 27
Facsimile: +45-70 20 90 37
E-Mail: info@schmersal.dk
Internet: www.schmersal.dk

Finland – Finnland
Advancetec Oy
Malminkaari 10B
PO Box 149
00701 Helsinki
Telephone: +3 58-(0) 9-3 50 52 60
Facsimile: +3 58-(0) 9-35 05 26 60
E-Mail: advancetec@advancetec.fi
Internet: www.advancetec.fi

France – Frankreich
Automatisme et Contrôle
8, rue Raoul Follereau
BP 18
38180 Seyssins
Telephone: +33-4 76 84 23 20
Facsimile: +33-4 76 48 34 22
E-Mail: info@automatisme-et-controle.fr
Internet: www.automatisme-et-controle.fr

Greece – Griechenland
Kalamarakis Sapounas S.A.
Ionias & Neromilou
PO Box 46566
13671 Chamomilos Acharnes
Athens
Telephone: +30-(0) 1-2 40 60 00-6
Facsimile: +30-(0) 1-2 40 60 07
E-Mail: kalamarakis.sapounas @ksa.gr

Honduras – Honduras
Lusitana Int´l
Distribuciones – Represantaciones
Apdo. Postal # 783
San Pedro Sula
Telephone: +5 04-5 57-66 35
Facsimile: +5 04-5 57-66 35

08 **Saarland**
Herbert Neundörfer
Werksvertretungen
Saargemünder Str. 68a
66130 Güdingen
Telephone: +49-(0)6 81-87 54 54
Facsimile: +49-(0)6 81-87 54 53
E-Mail: info
@herbert-neundoerfer.de

19 **Leipzig**
K.A. Schmersal GmbH
Geschäftsstelle Leipzig
Nonnenstraße 11c
04229 Leipzig
Telephone: +49-(0) 3 41-4 87 34 50
Facsimile: +49-(0) 3 41-4 87 34 51
E-Mail: gsleipzig@schmersal.de

09 **North Bavaria**
K.A. Schmersal GmbH
Geschäftsstelle Nürnberg
Beethovenstraße 14
91074 Herzogenaurach
Telephone: +49-(0) 91 32-73 70 00
Facsimile: +49-(0) 91 32-73 48 44
E-Mail: gsnuernberg@schmersal.de

15 **Central Bavaria**
Ing. Adolf Müller GmbH
Industrievertretungen
Elly-Staegmeyr-Str. 15
80999 München
Telephone: +49-(0) 89-8 12 60 44
+49-(0) 89-8 12 60 45
Facsimile: +49-(0) 89-8 12 69 25
E-Mail: info@ingam.de

10 **South Bavaria**
K.A. Schmersal GmbH
Geschäftsstelle München
Postfach 10 01 22
85592 Baldham
Neue Poststraße 13
85598 Baldham
Telephone: +49-(0) 81 06-85 62
Facsimile: +49-(0) 81 06-3 30 13
E-Mail: gsmuenchen
@schmersal.de

11 **Stuttgart**
Gerhard Schützinger
Labor-Schütz GmbH
Industrievertretungen
Postfach 81 05 69, 70522 Stuttgart
Eichwiesenring 6
70567 Stuttgart
Telephone: +49-(0) 7 11-7 15 46-0
Facsimile: +49-(0) 7 11-7 15 46-18
E-Mail: hv@schuetzinger.de
Internet: www.schuetzinger.de



Hungary – Ungarn
NTK
Ipari-Elektronikai és
Kereskedelmi KFT.
Kodaly Z.u. 1
9023 Györ
Telephone: +36-(0) 96-52 32 68
Facsimile: +36-(0) 96-43 00 11
E-Mail: ntkkft@mail.datanct.hu

Italy – Italien
Schmersal Italia s.r.l.
Via Papa Giovanni XXIII, 75/A
25086 Rezzato (BS)
Telephone: + 39-0 30-2 49 92 11
Facsimile: + 39-0 30-2 49 92 31
E-Mail: info@schmersal.it
Internet: www.schmersal.it

Japan – Japan
Schmersal Japan Branch Office
3-39-8 Shoan
Suginami-ku
Tokyo 167-0054
Telephone: +81-(0) 3-32 47-05 19
Facsimile: +81-(0) 3-32 47-05 22
E-Mail: safety@elanjp.com

Korea – Korea
MEC Manhani Electric Co. Ltd.
576-8, Bisan-2dong
Dongan-Ku
Anyang-City
Kyungi-Do 431-821
Telephone: +82-(0) 31-4 63-33 00
Facsimile: +82-(0) 31-4 63-33 98
Facsimile: +82-(0) 31-4 63-33 99
E-Mail: yskim@hanmee.co.kr

Mexico – Mexiko
Spyro, S/A de cv
Andalucia No. 77 - Col. Alamos
03400 Mexico, D.F.
Telephone: +52-5-5 30-35 47
Telephone: +52-5-5 38-28 26
Facsimile: +52-5-5 30-35 47
E-Mail: spyro@infosel.net.mx

Netherlands – Niederlande
Hatenboer Elektro BV
Postbus 200
2170 AE Sassenheim
Wasbeekerlaan 59
2171 AE Sassenheim
Telephone: +31-(0) 2 52-21 90 12
Facsimile: +31-(0) 2 52-23 29 38
E-Mail: info@hatenboer.com
Internet: www.hatenboer.com

New Zealand – Neuseeland
NHP Electrical Engineering
Products (N.Z.) Ltd.
7 Lockhart Place
PO Box 6 20 09
Mt Wellington
Auckland
Telephone: +64-(0) 9-2 76 19 67
Facsimile: +64-(0) 9-2 76 19 92

Norway – Norwegen
Schmersal Nordiske
Hoffsveien 92
0377 Oslo
Telephone: +47-22 06 00 70
Facsimile: +47-22 06 00 80
E-Mail: info@schmersal.no
Internet: www.schmersal.se

Paraguay – Paraguay
Brasguay
Ruta Internacional, 07
Mingua Guazu
Telephone: +5 95-6 44-2 00 18
Facsimile: +5 95-6 44-2 05 77
Facsimile: +5 95-6 44-2 04 18
E-Mail: kuntz@foznet.com.br

Poland – Polen
Schmersal - Polska s.c.
ul. Kremowa 65A
02-969 Warszawa
Telephone: +48-(0) 22-8 16 85 78
Telephone: +48-(0) 22-8 16 85 79
Facsimile: +48-(0) 22-8 16 85 34
E-Mail: office@schmersal.pl

Portugal – Portugal
K. A. Schmersal GmbH
Sucursal em Portugal
Av. das Descobertas, 15-2° D
Quinta do Infantado
2670 Loures
Telephone: +3 51-21-9 83 92 83
Facsimile: +3 51-21-9 83 19 37
E-Mail: info@schmersal.pt
Internet: www.schmersal.pt

Singapore – Singapur
Tong Sim Marine & Electric Co.
46 Kaki Bukit Crescent
Kaki Bukit Techpark 1
Singapore 416269
Telephone: +65-7 43 31 77
Facsimile: +65-7 45 37 00
E-Mail: tongsim
@mbox4.singnet.com.sg

Spain – Spanien
Forn Valls S.A.
c/Milanesado, 2 tda
08017 Barcelona
Telephone: +34-9 32-03 41 33
Telephone: +34-9 32-04 05 44
Facsimile: +34-9 32-05 54 67
E-Mail: fvsa@retemail.es
Internet: www.fornvalls.com

South Africa – Südafrika
A+A Dynamic Distributors (Pty) Ltd.
42 Webber Street
Sølby
PO Box 38247
2016 Booysens
Telephone: +27-11-4 93 50 22
Facsimile: +27-11-4 93 07 60
E-Mail: nwkayser@iafrica.com

Sweden – Schweden
Schmersal Nordiska AB
Klockarus Våg 1
43533 Mölnlycke
Telephone: +46-(0) 31-3 38 35 00
Facsimile: +46-(0) 31-3 38 35 35
E-Mail: info@schmersal.se
Internet: www.schmersal.se

Switzerland – Schweiz
Schmersal Schweiz AG
Freilagerstrasse 25
8047 Zürich
Telephone: +41-(0) 43-3 11 22 33
Facsimile: +41-(0) 43-3 11 22 44
E-Mail: info@schmersal.ch

Taiwan – Taiwan
Leader Camel Enterprise Co., Ltd.
No. 453-7, Pei Tun Rd.
Taichung
Telephone: +886-4-2 41 32 92
Facsimile: +886-4-2 41 29 23
E-Mail: camel88@ms46.hinet.net
Internet: www.leadercamel.com.tw

UK – Großbritannien
Schmersal UK Ltd.
Unit 1, Beauchamp Business Centre
Enigma Park
Malvern
Worcs WR14 1GL
Telephone: +44-(0) 16 84-57 19 80
Facsimile: +44-(0) 16 84-56 02 73
E-Mail: support@schmersal.co.uk
Internet: www.schmersal.co.uk

USA – USA
Schmersal Inc.
100 Grasslands Road, Suite 110
Elmsford
New York 10532
Telephone: +1-(0) 9 14-347-47 75
Facsimile: +1-(0) 9 14-347-15 67
E-Mail: info@schmersalusa.com
Internet: www.schmersalusa.com

Venezuela – Venezuela
Petro System S.A.
Calle M, Residencias Las Rosas
P.B. Local 3
Santa Rosa de Lima, Baruta
Caracas
Telephone: +58-2 12-9 92-1916
E-Mail: petro@habitad.com
Internet: www.habitad.com/
petrosystem

Other catalogues and brochures on the subject of machine safety

Catalogues

- General catalogue Industrial switching systems
- General catalogue on CD ROM
- Programme overview
- Catalogue Part A Lift switchgear
- Catalogue Part B Proximity switches and synchro-generators

Brochures

- Explosion protected switches
- Foot switches for medical technology
- Foot switches GFI/GFSI
- Multiple luminaires ML35 / ML50
- Assembly kits
- Proximity switches series IFL
- Optoelectronic safety devices
- Safety system packages
- Safety contact mat
- Safety light barriers SLC 400
- Safety laser scanners SLB 200 / SLB 400
- Safety laser scanners LSS 300
- The guard knob system
- Door knob system TG 1PW LED
- Safety switch strips SE40 / SE70
- Switch and applications manual
- S Guide gor safety modules
- Poster S Guide for safety modules
- Steute programme overview
- Company brochure – enterprise safety


Safety Relay Modules
Protect SRB series
Version 2.0 – August 2002
Housing Dimensions and Wiring Diagrams
System requirements
• Minimum Pentium 90 PC with 16 MB RAM
• Windows® 95 or higher
• Windows® NT V3.51 or higher
• Acrobat Reader 4.0
To install Acrobat Reader execute the file ACRD4ENU in the directory \ACROREAD on the CD-ROM.
SCHMERSAL



K. A. Schmersal GmbH
Industrielle Sicherheitsschaltsysteme
Möddinghofe 30
D-42279 Wuppertal
Tel.: +49-(0)2 02 / 64 74-0
Fax: +49-(0)2 02 / 64 74-100
Internet: http://www.schmersal.de
E-Mail: info@schmersal.de

08.02