MOFLASH SIGNALLING

INSTALLATION INFORMATION

PLEASE READ PRIOR TO INSTALLATION



LEDA125 Tri-Colour Series

VISUAL & ACOUSTIC SIGNALLING DEVICE

S00618 - ISSUE 1

EN Translations & Documentation, scan **QR Code**
FR Traductions & Documentation, scannez le **QR Code**
DE Übersetzungen & Dokumentation, **QR-Code** scannen
IT Traduzioni & Documentazione, scansionare il **QR code**
ES Traducciones & Documentación, escanear **QR code**

APPROVALS AND CONFORMITIES

www.moflash.com

technical@moflash.co.uk

General Installation Notes

- Installation must be carried out in accordance with the latest codes and regulations by a qualified electrician.
- Ensure power is disconnected prior to installation or maintenance to avoid danger of electrical shock.
- Environmental exposure conditions during installation should be dry. Moist or wet conditions should be avoided.
- The Lens of the product is Polycarbonate plastic. Do not clean with petroleum-based cleaners.
- For all installations, mount the Beacon ensuring the Lens is above the Base. Any other mounting positions will impair the IP Rating (Ingress Protection) of the Beacon.
- Avoid mounting the Beacon where it will be subjected to excessive vibration.
- The DC supply must be fully rectified and smoothed. If not, suppression will be required. Typical suppression units include: RS 219-2921 or RS 240-696. Both will suffice.

Installation Instructions

Unscrew the three M3 screws that secure the Base Plate to the Base and gently remove the Base Plate away from the Base.

Pierce the Cable Grommet located in the Base Plate and insert power cable or control cables through the Grommet, pulling the cable back slightly (around 10mm) to allow the Grommet to form a weatherproof seal.

See Diagram 1 below for a sample method for feeding cables through the Grommet and PCB for final termination into the three-way Terminal Block.

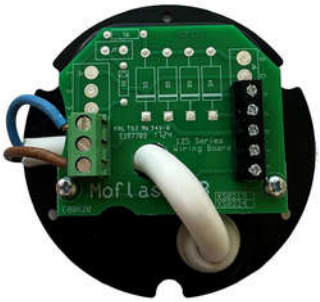

Diagram 1

Once cable length has been set, connect power to the terminals marked 1, 2, 3, 4, 5 & 6 on the six-way Terminal Block **(See Wiring Diagram 1).**

Note: The audible/visual modes may be used independently or combined in any required combination via PLC control or relays

Once necessary connections have been made, locate the Base Plate back onto the Base using the three M3 screws removed earlier.

Now secure the Base to an appropriate surface using the 3 x 4.5mm fixing holes located on the Base with 4mm screws (not supplied).

Wiring Diagram

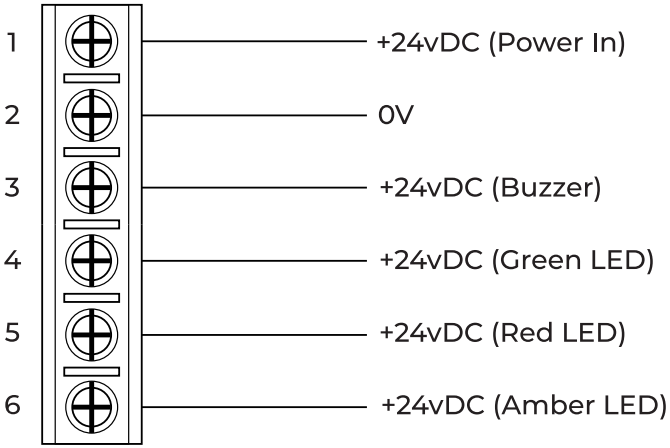

Wiring Diagram 1 (DC)

Moflash Signalling Limited accepts no liability for any consequences following use of this document. Any technical specifications and products referred to within this document are subject to change without notice due to continual improvement and product development policies. All dB(A) figures are subject to environmental conditions. The units are sold under Moflash standard conditions of sale, available on request. Additional resources, including installation sheet translations, certificates and DoCs are available from the **www.moflash.co.uk** website**.**