

Low Voltage Switches

Fusegear
Switch fuses OS and OSM

Power and productivity
for a better world™

Switch fuses
OS 16...1250, OSM 32...1250

Contents

4 Product overview

6 Features

8 Technical data

18 Ordering information, manual operation
18 DIN- type, front operated, side operated and special connected switch fuses OS
31 BS- type, front operated, side operated and special connected switch fuses OS
45 NFC- type, front and side operated switch fuses OS
48 Neozed- type, front and side operated switch fuses OS
49 UL- and CSA- types, front and side operated switch fuses OS

53 Ordering information, motorized operation
53 Motorized switch fuses OSM, DIN-, BS- and NFC -types

56 Ordering information, accessories
56 Selection overview
58 Optional handles
62 Extended shafts and shaft accessories
65 Auxiliary contacts
68 Fourth poles and neutral links
70 Solid links, handle/fuse storage and phase barriers
71 Terminal shrouds and terminal angles
73 Terminal clamps
76 Conversion kits
78 Blown fuse indicators
80 Locking and mounting accessories

82 Dimension drawings

113 Contact functions

115 Index

Switch fuses 16...1250 Amperes

Manual operation



| | | |

Accessories	Solid links
Optional handles	Terminal shrouds
Extended shafts	Connecting accessories
Auxiliary contacts	Conversion kits
Fourth poles	Blown fuse indicators
N & PE terminals	Locking accessories











OS200D	OS400D	OS630D	OS1250D
OS250D		OS800D	
OS200B	OS315B	OS630B	OS1250B
OS250B	OS400B	OS800B	

OS200J	OS400J	OS600J	OS1200L
		OS800L	

200	**250**	**200**	**315**	**400**	**600**	**630**	**800**	**1200**	**1250**
110	140			230		355	450		560
110	145		180	230		355	450		560
		150		250	400		500	-	
		200		350	500		600	-	









OSM200D	OSM400D	OSM630D	OSM1250D
OSM250D		OSM800D	
OSM200B	OSM315B	OSM630B	OSM1250B
OSM250B	OSM400B	OSM800B	

200	**250**	**315**	**400**	**630**	**800**	**1250**

Complete range of switch fuses
From 16 to 1250 A, 690 V

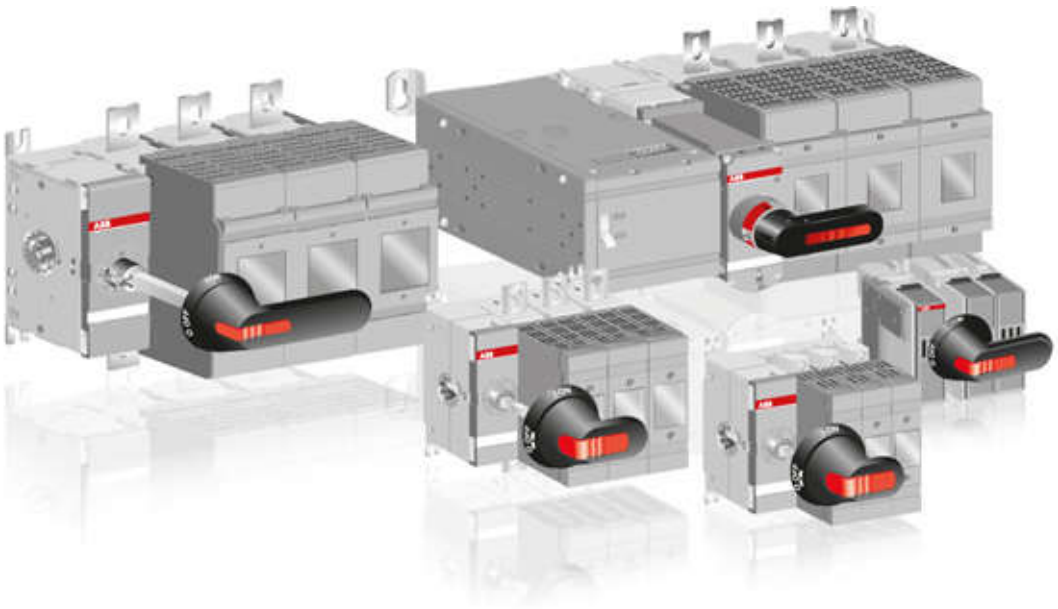

Features within the range of ABB switch fuses include single pole to four pole versions.
The switch fuse mechanism located in any position, increasing the ease of installation and adaptability to different types of cubicle designs (OS32G...1250).

A wide selection of accessories improve the usability of the switch fuses; 6 and 8- pole, changeover, bypass and mechanically interlocked switch combinations can be built by using conversion kits.

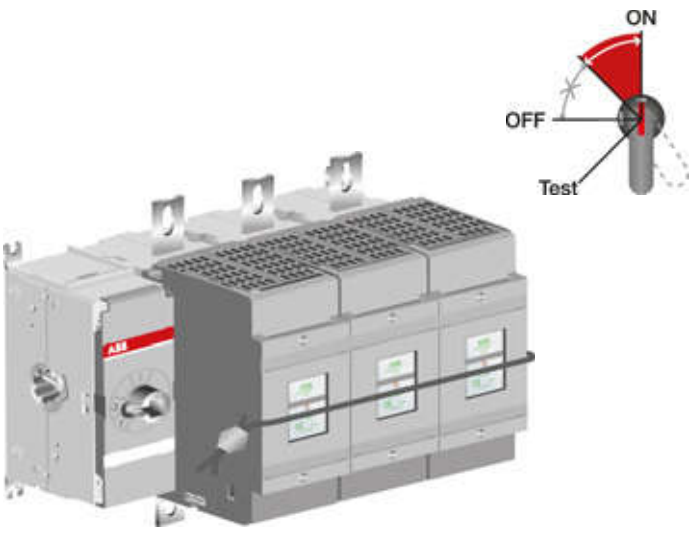

The switch fuses are available for all types of fuse links, DIN, BS, NFC, UL, CSA. Switch fuses are also suitable for remote control by the motorized OSM versions.

Designed for safety
The switch fuse ensures safe operation, protecting both people and equipment.

Designed and based on substantial experience of electrical safety, the switch fuse eliminates the risk of electrical accidents:

- The fuse covers cannot be opened while the switch fuse is in the ON-position and can be sealed in the closed position.
- The double insulated external operating handle eliminates the risk of touching live parts outside the box.
- The handle indicates the position of the contacts with complete reliability in all situations.
- The frame is made of robust plastic with excellent mechanical and thermal properties.
- Voltage output pins (as standard)
- Pole markings as standard

▸ You take no risks with OS16...1250 switch fuses

Switch fuses for extreme conditions - Numerous applications require switch fuses that can withstand extreme conditions. High voltages and high short circuit currents create a demand for superior performance without neglecting safety.

Easy, flexible installation

The OS 32...1250 switch fuse is easy to use and a snap to install according to your choice: the adjustable mounting feet allow both top and side mounting of the switch fuse.

The OS switch fuse offers you flexible cabling options. The high terminal positioning with space to the back plate simplifies the mounting of cables. It's also ideal for double cabling, which in turn saves on space. Special connected versions offer alternative solutions in installation.

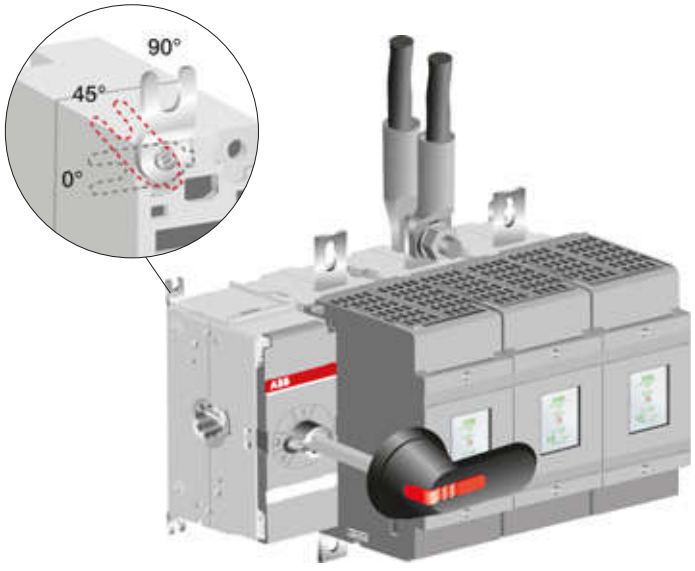

Superior performance

- High CTI in supporting parts, resulting high U_i ratings
- The contact constructions are optimal, regardless of fuse type, DIN, BS, NFC or UL-type
- Meets the requirements for installation close to the main transformer up to 100 kA in heavy industry and in ships

▸ High performance level and smart design makes OS switch fuses suitable for all applications in low voltage networks.

Compact construction

- Intelligent construction in combination with a small number of components results in a very compact mechanism design
- Very small footprint area

▸ Space savings mean cost reduction!

Technical data
Switch fuses OS16...160 and OSM32...160

Technical data according to IEC 60947-3		Switch size	A	OS (Mini) 16	OS (Mini) 20	OS (Mini) 25
Rated insulation voltage	Pollution degree 3		V	1 000	1 000	1 000
Dielectric strength		50 Hz 1min.	kV	10	10	10
Rated impulse withstand voltage			kV	12	12	12
Rated thermal current in ambient 35 °C	In open air		A/W	16/3.5	20/3.5	25/3.5
and temporarily 40 °C[5] /	In enclosure[2]		A/W	16/3.5	20/3.5	25/3.5
max. fuse power dissipation[1]	In enclosure with solid links		A	32	32	32
...with minimum cable cross section		Cu	mm^2	2.5	2.5	4
Rated operational voltage AC-20 and DC-20			V	1 000	1 000	1 000
Rated operational current, AC-21A		up to 500 V	A	16	20	25
		690 V	A	16	20	25
Rated operational current, AC-22A		up to 500 V	A	16	20	25
		690 V	A	16	20	25
Rated operational current, AC-23A		up to 500 V	A	16	20	25
		690 V	A	16	20	25
Rated operational current / poles in series DC-21A		48 V	A	16/2	20/2	25/2
		110-220 V	A	16/2	20/2	25/2
		440 V	A	16/4	20/4	25/4
Rated operational current / poles in series DC-22A		48 V	A	16/2	20/2	25/2
		110-220 V	A	16/2	20/2	25/2
		440 V	A	16/4	20/4	25/4
Rated operational current / poles in series DC-23A		48 V	A	16/2	20/2	25/2
		110-220 V	A	16/2	20/2	25/2
		440 V	A	16/4	20/4	25/4
Rated operational power, AC-23[4]	The kW-ratings are accurate for	230 V	kW	4	5.5	5.5
	three-phase 1500 R.P.M. standard	400 V	kW	7.5	7.5	11
	asynchronous motors.	415 V	kW	7.5	7.5	11
		500 V	kW	7.5	11	15
		690 V	kW	11	15	22
Rated breaking capacity in category AC-23		≤ 690 V	A	256	256	256
Rated breaking capacity / poles in series		up to 220 V	A	128/2	128/2	128/2
in category DC-23		440 V	A	128/4	128/4	128/4
Rated conditional short-circuit current	at prospective SC-current	80 kA, 415 V	kA	9	9	9
I_p (r.m.s.) and corresponding max. allowed	Max. OFA_ fuse size gG / aM		A			
cut-off current $\hat{i}_c$	at prospective SC-current	100 kA, 500 V	kA	8	8	8
	Max. OFA_ fuse size gG / aM		A			
The cut-off current $\hat{i}_c$ refers to values	at prospective SC-current	50 kA, 690 V	kA	7	7	7
listed by fuse manufacturers	Max. OFA_ fuse size gG / aM		A			
(single phase test acc. to IEC60269).	at prospective SC-current	80 kA, 690 V	kA	7.5	7.5	7.5
	Max. OFA_ fuse size gG / aM		A			
Rated short-time withstand current, 1 s.	r.m.s. -value		kA	1	1	1
Rated capacitor power	The capacitor rating of the	400 V	kVAr	5	10	12.5
when no initial charge on the capacitor	switch-fuse is limited by	415 V	kVAr	5	10	12
	the fuse link.	690 V	kVAr	8	15	20
Power loss / pole	With rated current, without fuse		W	0.8	1.3	1.3
Mechanical endurance	Divide by two for operation cycles		Oper.	20 000	20 000	20 000
Fuse types, IEC 60269-2-1	DIN 43620, Neozed DIN49522			D 01		
	NFC 63210, 63211					10x38
	BS 88-2, -6 -size /				A1	
	distance of fuse-link bolts		mm		M4/44.5	
			mm			
Weight without accessories	3-pole switch fuses		kg	0.7	0.7	0.7
	4-pole switch fuses		kg	0.9	0.9	0.9
Built-in terminal size		Cu	mm^2	0.75...10	0.75...10	0.75...10
Terminal bolt size (included)	Metric thread diameter x length		mm			
Terminal tightening torque	Counter torque required		Nm	2	2	2
Fuse-links bolts tightening torque			Nm		2	
Operating torque	Typical for 3-pole switch fuses		Nm	3	3	3

* = Utilization category B

[1] Ambient temperature 60°C: derating 20%. Mounting on ceiling: derating 10%

[2] OS160G: Mounting on wall, horizontal fuses: derating 5%

[3] Max. fuse body diam. 32 mm

[4] Some fuse links limit these figures further. Starting current characteristics must be considered separately

[5] Acc. to IEC 60947-1, § 6.1.1. Minimum ambient temperature -5°C. Category B: -5°C...-35°C

[6] Max. fuse body diam. 22 mm

[7] 3 Nm with cable sizes 2.5...6 mm^2, 4 Nm with cable sizes 10...25 mm^2

OS (Mini) 32	OS (Mini) 35	OS (Mini) 40	OS_ 32G	OS_ 50G	OS_ 63G	OS_ 100G	OS_ 125G	OS_ 160G
1 000	1 000	1 000	1 000	1 000	1 000	1 000	1 000	1 000
10	10	10	10	10	10	10	10	10
12	12	12	12	12	12	8	8	8
32/3.5	35/4	40/4.5	32/7.5	50/7.5	63/7.5	100/12	125/12	160/12
32/3.5	35/4	40/4.5	32/7.5	50/7.5	63/7.5	100/12	125/12	160/12
32	35	40						
6	10	10	6	10	16	50	50	70
1 000	1 000	1 000	1 000	1 000	1 000	1 000	1 000	1 000
32	35	40	32	50	63	100	125	160
32	35	40	32	50	63	100	125	160
32	35	40	32	50	63	100	125	160
32	35	40	32	50	63	100	125	160
32	35	40	32	50	63	100	125	160
32	35	40	32	50	63	100	125	160
32/2	32/2	32/2	32/2	50/2	63/2	100/2	125/2	160/2
32/2	32/2	32/2	32/2*	50/2*	63/2*	100/2*	125/2*	125/2*
32/4	32/4	32/4	32/4*	50/4*	50/4*	100/4*	125/4*	125/4*
32/2	32/2	32/2	32/2	50/2	63/2	100/2	125/2	160/2
32/2	32/2	32/2	32/2*	50/2*	63/2*	100/2*	125/2*	125/2*
32/4	32/4	32/4						
32/2	32/2	32/2	32/2	50/2	63/2	100/2	125/2	160/2
32/2	32/2	32/2	32/2*	50/2*	63/2*	100/2*	125/2*	125/2*
32/4	32/4	32/4						
7.5	7.5	11	7.5	11	18.5	30	37	45
15	15	18.5	15	22	30	55	55	75
15	15	18.5	15	22	30	55	55	75
18.5	22	22	18.5	30	37	55	75	90
22	30	30	22	37	55	90	110	132
256	280	320	504	504	504	1280	1280	1280
128/2	128/2	128/2	252/2	252/2	252/2	640/2	640/2	640/2
128/4	128/4	128/4						
9	9	9	13.5	13.5	13.5	23.5	23.5	23.5
			80/63	80/63	80/63	160/160	160/160	160/160
8	8	8	12.5	12.5	12.5	25.5	25.5	25.5
			63/50	63/50	63/50	160/160	160/160	160/160
7	7	7	9.5	9.5	9.5	17.5	17.5	17.5
			63/50	63/50	63/50	125/160	125/160	125/160
7.5	7.5	7.5	11.5	11.5	11.5	20.5	20.5	20.5
			50/50	50/50	50/50	125/160	125/160	125/160
1	1	1	2.5	2.5	2.5	5	5	5
15	15	15	15	20	25	40	50	60
15	15	15	15	25	32	42	55	65
25	25	25	25	42	50	75	90	100
2	2.4	3.5	1	2.5	4	4	5	9
20 000	20 000	20 000	20 000	20 000	20 000	20 000	20 000	20 000
	D 02	000	000		000		000, 00	000, 00
14x51				14x51			22x58	
A1, A2, F1			A2-A3[6]		A2-A3[6]	A2-A4[3]	A2-A4[3]	A2-A4[3]
M4/44.5 (A1)			M5/73		M5/73	M5/73, M8/94	M5/73, M8/94	M5/73, M8/94
M4/73 (A2)								
0.7	0.7	0.8	1.1	1.1	1.1	1.5	1.5	1.5
0.9	0.9	1.0	1.3	1.3	1.3	1.8	1.8	1.8
0.75...10	0.75...10	0.75...10	2.5...25	2.5...25	2.5...25			
						M8x25	M8x25	M8x25
2	2	2	3/4[7]	3/4[7]	3/4[7]	15-22	15-22	15-22
2			3.5		3.5	M5:3.5 M8:5	M5:3.5 M8:5	M5:3.5 M8:5
3	3	3	5	5	5	7	7	7

Placing options of the operating mechanism

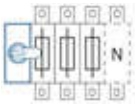

At the end of the switch fuse OS_03 or 04

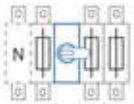

Between the poles OS_12 or 22

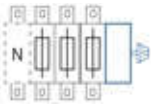

Side operated types OS_30 or 40 OS_03 or 04

Technical data
Switch fuses OS/OSM200...1250

Technical data according to IEC 60947-3		Switch size	A	OS_ 200_
Rated insulation voltage and rated operational voltage AC-20 and DC-20	Pollution degree 3		V	1000
Dielectric strength		50 Hz 1min.	kV	10
Rated impulse withstand voltage			kV	12
Rated thermal current in ambient 35 °C and temporarily in 40 °C[5] / max. fuse power dissipation	In open air		A/W	200/17
	In enclosure		A/W	200/15
...with minimum cable cross section		Cu	mm^2	95
Rated thermal current of detachable neutral	In open air / Cu cable or bar cross section	In "N3" types	A/mm^2	290/120
Derating, mounting on wall horizontal fuses	In open air or ventilated enclosure		%	0
	Totally enclosed		%	5
Derating, mounting on ceiling			%	10
Derating at 60 °C	In open air / in enclosure		%	20/20
Rated operational current AC-21A		≤ 500 V	A	200
		690 V	A	200
Rated operational current AC-22A		≤ 415 V	A	200
		500 V	A	200
		690 V	A	200
Rated operational current AC-23A		≤ 415 V	A	200
		500 V	A	200
		690 V	A	200
Rated operational current / poles in series DC-21A, DC-22A and DC-23A		≤ 220 V	A	200/1
		440 V	A	200/2
		660 V	A	200/3
		750 V	A	180/4
		880 V	A	180/4
Rated operational power AC-23[1]		230 V	kW	60
		400 V	kW	110
		415 V	kW	110
		500 V	kW	132
		690 V	kW	200
Rated breaking capacity AC-23		≤ 690 V	A	1600
Rated conditional short-circuit current I_p (r.m.s.)	at prospective SC-current	80 kA, 415 V	kA	35
	Max. OFA_ fuse size gG/aM		A	250/200
and corresponding max. allowed cut-off current $\hat{i}_c$	at prospective SC-current	100 kA, 500 V	kA	37.5
	Max. OFA_ fuse size gG/aM		A	250/200
	at prospective SC-current	80 kA, 690 V	kA	25
	Max. OFA_ fuse size gG/aM		A	160/
The cut-off current $\hat{i}_c$ refers to values listed by fuse	at prospective SC-current	50 kA, 415 V	kA	28
	Max. BS fuse size gG/gM		A	200/200M315
manufacturers (single phase	at prospective SC-current	80 kA, 690 V	kA	28
test acc. to IEC60269)	Max. BS fuse size gG/gM		A	200/200M250
Rated short-time withstand current, 1s.	r.m.s. -value		kA	8
	Max. distance from switch frame to nearest busbar/cable support	mm	150	150
Rated capacitor power when no initial charge of the capacitor	The capacitor ratings of the switch-fuses are limited by the fuse links	400 V	kVAr	90
		415 V	kVAr	100
		500 V	kVAr	120
		690 V	kVAr	160
Power loss / pole	With rated current, without fuse		W	8
Mechanical endurance	Divide by two for operation cycles		Oper.	20 000
Fuse types, IEC 60269-2	Sec. I, DIN 43620			0
	Sec. IA, NFC 0-3 Ref.A, 4a Ref.B			1
	Sec. II, BS 88			B1-B2
	Size / distance of fuse-link bolts		mm	M6/111
Weight without accessories	3-pole switch fuses		kg	2.6
Terminal bolt size (included)	Metric thread diameter x length		mm	M8x25
Terminal tightening torque	Counter torque required		Nm	15-22
Fuse-links bolts tightening torque			Nm	4
Operating torque	Typical for 3-pole switch fuses		Nm	7

[1] These values are given for guidance and may vary acc. to the motor manufacturer
[2] Max fuse body dia 52 mm
[3] Max fuse body dia 62 mm
[4] Category B
[5] Acc. to IEC 60957-2, IEC 60947-1, § 6.1.1. Minimum ambient temperature -5°C. Category B: -5°C...-35°C

OS_ 250_	OS_ 315_	OS_ 400_	OS_ 630_	OS_ 800_	OS_ 1250_
1000	1000	1000	1000	1000	1000
10	10	10	10	10	10
12	12	12	12	12	12
250/23	315/32	400/45	630/60	800/65	1250/110
250/20	315/32	400/30	570/50	720/55	1000/85
120	185	240	2 x 185	2 x 240	2 x 400
290/120	450/240	450/240	900/2 X 240	900/2 x 240	1250/2 x 400
0	0	4	0	4	4
5	5	8	5	8	8
10	10	10	10	10	10
20/20	20/20	20/20	20/20	20/20	20/20
250	315	400	630	800	1250[4]
250	315	400	630	800	1250[4]
250	315	400	630	800	1250
250	315	400	630	800	1250[4]
250	315	400	630	800	1250[4]
250	315	400	630	800	1000
250	315	400	630	800	1000[4]
250	315	400	630	800	1000[4]
250/1	315/2	400/2	630/1[4]	800/1[4]	
250/2	315/3[4]	400/3[4]	630/2[4]	800/2[4]	
250/3	315/4[4]	400/4[4]	630/3[4]	720/3[4]	
230/4	315/4[4]	400/4[4]	630/4[4]	720/4[4]	
230/4			630/4[4]	720/4[4]	
75	100	132	200	250	315
140	160	220	355	450	560
145	180	230	355	450	560
170	220	280	450	560	710
250	315	400	630	710	1000
2000	3200	3200	6400	6400	8000
40.5		59	77	77	89
355/315		500/500	800/800	800/800	1250/1250
37.5		63.5	83	83	105
250/250		500/500	800/800	800/800	1250/-
32.5		46	55	55	88
200/250		315/400	500/630	500/630	1000/1000
28	44	44	67	67	90
250/200M315	400/400M500	400/400M500			
28	48	48	55	55	109
250/200M250	400/400M450	400/400M450			1250/-
8	14	14	18	18	40
150	150	150	150	150	
105	145	180	250	310	440
115	160	200	270	340	460
135	175	215	300	375	550
190	250	325	450	550	750
13	19	30	46	75	75
20 000	16 000	16 000	10 000	10 000	6000
0-1		0-2	3	3	4, 4 a
	2	3	3	4 a	
B1-B3[2]	B1-B4[3]	B1-B4[3]	C1-C2	C1-C3	D1
M8/111	M8/111	M8/111	M10/133, 184	M10/133, 184	2xM12/149
3.1	5.7	5.7	11.5	11.5	29
M10x30	M10x30	M10x30	M12x40	M12x40	M12x50
30-44	30-44	30-44	50-75	50-75	50-75
5	20	20	M10:30 M12:40	M10:30 M12:40	M12:40
7	19	19	38	38	65

Placing options of the operating mechanism

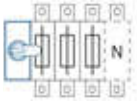

At the end of the switch fuse OS_03 or 04

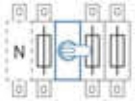

Between the poles OS_12 or 22

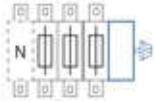

Side operated types OS_30 or 40 OS_03 or 04

Technical data
Special connected switch fuses
OS125...400

Technical data according to IEC 60947-3		Switch size	A	OS 125G
Rated insulation voltage and rated operational voltage AC-20 and DC-20		Pollution degree 3	V	1 000
Dielectric strength		50 Hz 1min.	kV	10
Rated impulse withstand voltage			kV	8
Rated thermal current in ambient 35 °C and temporarily 40 °C[10] / max. fuse power dissipation[1]			A/W	125/12
...with minimum cable or bar cross section		Cu	mm²	50
Rated thermal current in ambient 40 °C/ max. fuse power dissipation[1]			A/W	
...with minimum cable or bar cross section		Cu	mm²	
Rated operational current, AC-21A, AC-22A, AC-23A		up to 690 V	A	125
Rated operational current/poles in series		48 V	A	125/2
DC-21A, DC-22A and DC23-A		110-220 V	A	125/2
		440 V	A	125/4*(DC-21A)
		660 V	A	
		750 V	A	
		880 V	A	
Rated operational power, AC-23[2]	The kW-ratings are accurate for	230 V	kW	37
	three-phase 1500 R.P.M. standard	400 V/415 V	kW	55/55
	asynchronous motors.	500 V/690 V	kW	75/110
Rated breaking capacity in category AC-23		up to 690 V	A	1280
Rated breaking capacity/poles in series in category DC-23		up to 220 V	A	640/2
Rated conditional short-circuit current I_p (r.m.s.)	at prospective SC-current	80 kA, 415 V	kA	23.5
and corresponding max. allowed	Max. OFA_ fuse size gG/aM		A	160/160
cut-off current $\hat{i}_c$	at prospective SC-current	65 kA, 500 V	kA	
	Max. OFA_ fuse size gG/aM		A	
The cut-off currents $\hat{i}_c$ refer to values listed by	at prospective SC-current	100 kA, 500 V	kA	25.5
fuse manufacturers[7]	Max. OFA_ fuse size gG/aM		A	160/160
(single phase test acc. to IEC60269)	at prospective SC-current	50 kA, 690 V	kA	17.5
	Max. OFA_ fuse size gG/aM		A	125/160
	at prospective SC-current	80 kA, 690 V	kA	20.5
	Max. OFA_ fuse size gG/aM		A	125/160
	at prospective SC-current	50 kA, 415 V	kA	
	Max. BS fuse size gG/gM		A	
	at prospective SC-current	80 kA, 415 V	kA	
	Max. BS fuse size gG/gM		A	
	at prospective SC-current	50 kA, 690 V	kA	
	Max. BS fuse size gG/gM		A	
	at prospective SC-current	80 kA, 690 V	kA	
	Max. BS fuse size gG/gM		A	
Rated short-time withstand current, 1s.	r.m.s. -value		kA	5
	Max. distance from switch frame to		mm	
	nearest busbar/cable support			
Rated capacitor power	The capacitor rating of the	400 V/415 V	kVAr	50/55
when there is no initial charge on the capacitor	switch-fuse is limited by the fuse link	690 V	kVAr	90
Power loss/pole	With rated current, without fuse	BB, BD, UB	W	5
		P_, L_, _R, _L, LR	W	
Mechanical endurance	Divide by two for operation cycles		Oper.	20 000
Fuse types, IEC 60269-2	DIN 43620	BB, BD, UB		000, 00
		P_, L_, _R, _L, LR		000, 00
	BS 88	BB, BD, UB		A2-A4[9]
	-size/distance of fuse-link bolts	BB, BD, UB	mm	M5/73, M8/94
	BS 88	P_, L_, _R, _L, LR		A2-A4[9]
	-size/distance of fuse-link bolts	P_, L_, _R, _L, LR	mm	M5/73, M8/94
Weight without accessories	3-pole/4-pole switch fuses		kg	1.5/1.8
Terminal bolt size	Metric thread diameter x length	BB, BD, UB	mm	M8x25
	Side terminals	P_, L_, _R, _L, LR	mm	
Terminal tightening torque	Counter torque required		Nm	15-22
Fuse-links bolts tightening torque		BB, BD, UB	Nm	M5:3.5 M8:5
		P_, L_, _R, _L, LR	Nm	
Operating torque	Typical for 3 and 4-pole switches		Nm	7

* B category.

[1] Ambient temperature 60 °C: derating 20%; mounting on ceiling: derating 10%; mounting on wall, horizontal fuses: derating 8%. OS160G: Mounting on wall, horizontal fuses: derating 5%.

[2] Some fuse links limit these figures further. Starting current characteristics must be considered separately.

[3] Plug in types: fuse size gG/aM:400/400.

[4] Max fuse body dia 52 mm.

[5] Side terminals tightening torque max 15 Nm.

[6] Max fuse body dia 62 mm.

[7] BS fuse manufacturers covered by this table ABB, MEM, Bussmann, GEC.

[8] 3-pole types only.

[9] Max fuse body dia 32 mm.

[10] Acc. to IEC 60947-1, § 6.1.1. Minimum ambient temperature -5°C.Category B: -5°C...-35°C.

OS 160G	OS 200	OS 250	OS 315	OS 400
1 000	1 000	1 000	1 000	1 000
10	10	10	10	10
8	12	12	12	12
160/12				
70				
	200/17	250/23	315/32	400/45
	95	120	185	240
160	200	250	315	400
160/2	200/1	250/1	315/2	400/2
125/2*	200/1	250/1	315/2	400/2
125/4*(DC-21A)	200/2	250/2	315/3*	400/3*
	200/3	250/3	315/4*	400/4*
	180/4	230/4	315/4*	400/4*
	180/4	230/4		
45	60	75	100	110
75/75	100/110	132/140	170/180	220/230
90/132	140/180	170/240	220/295	280/355
1280	1600	2000	3200	3200
640/2				
23.5				
160/160				
	26	32,5		40.5
	200/-	250/-		400/-
25.5	30	37,5		63.5
160/160	200/200[8]	250 /250[8]		500/500[8] [3]
17.5	20	29,5		32
125/160	160/-	250/-		355/-
20.5	25	32,5		38
125/160	160/-[8]	200/250[8]		355/400[8]
	21	26	28	34
	200/-	250/-	315/-	400/-
	30	30	50	50
	200/200M250[8]	250/200M250[8]	400/400M500[8]	400/400M500[8]
	20,5	28	30	38
	200/-	250/-	315/-	400/-
	28	28	48	48
	200/200M250[8]	250/200M250[8]	400/400M450[8]	400/400M450[8]
5	8	8	14	14
	150	150	150	150
60/65				
100				
9	8	13	19	30
	11	17	25	40
20 000	20 000	20 000	16 000	16 000
000, 00	0	0 - 1		0 - 2
000, 00		0 - 1		0 - 2
A2-A4[9]	B1 - B2[4]	B1 - B3[4]	B1 - B4[6]	B1 - B4[6]
M5/73, M8/94	M6/111	M8/111	M8/111	M8/111
A2-A4[9]	B1 - B3[4]	B1 - B3[4]	B1 - B4[6]	B1 - B4[6]
M5/73, M8/94	M8/111	M8/111	M8/111	M8/111
1.5/1.8	4.2/5.3	4.2/5.3	7.0/9.0	7.0/9.0
M8x25	M8x25	M10x30	M10x30	M10x30
	M8x16	M8x16	M8x16	M8x16
15-22	M8: 15-22[5], M10: 30-44	M8: 15-22[5], M10: 30-44	M8: 15-22[5], M10: 30-44	M8: 15-22[5], M10: 30-44
M5:3.5 M8:5	4	5	20	20
	5	5	20	20
7	7	7	19	19



BB-types

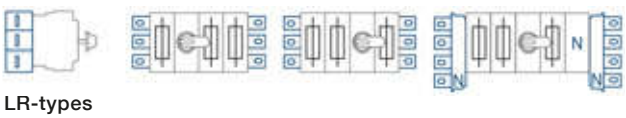

LR-types

Technical data
Fusible disconnect switches OS30...1200

	Switch size	A	OS Mini 30	OS 60G
Approvals		2 pole	-	UL/cULus[4]
UL98, UL248, UL512		3 pole	UL/cULus	UL/cULus
CSA C 22.2 No 4, No 248		4 pole	UL/cULus	UL/cULus

Technical data according to UL/cULus

General purpose amp rating	pf= 0.7...0.8	-40° to 40 °C	A	30	60
Max. oprerating voltage			VAC	600	600
			VDC	250	250
Max. horsepower rating / motor FLA current	pf= 0.4...0.5 Three phase	240 V	HP/A	7.5/22.0	15/42.0
		480 V	HP/A	15/21.0	30/40.0
		600 V	HP/A	20/22.0	50/52.0
	Single phase	120 V	HP/A	2/24.0	
		240 V	HP/A	3/17.0	
Short circuit rating with fuse, 3 and4-pole types			kA	200	200
	UL/CSA fuse size		A	30	60
	UL/CSA fuse type			J/CC	J
Min. electrical endurance	pf= 0.75...0.8	operation cycles		6000	6000
Mechanical endurance		operation		20 000	20 000
Terminal lug kits				Integral	Integral
Wire range			AWG	#18-8	#14-4
Torque	Wire tightening		lb.in	17	30/35[5]
	Lug mounting		lb.in	N/A	N/A

Technical data according to IEC 60947-3

Rated insulation voltage	Pollution degree 3		V	1 000	1 000
Dielectric strength		50 Hz 1min.	kV	10	10
Rated impulse withstand voltage			kV	12	
Rated thermal current in ambient 40 °C /	In open air		A/W	32/3.5	63/7.5
max. fuse power dissipation[1]	In enclosure[2]		A/W	32/3.5	63/7.5
...with minimum cable cross section		Cu	mm^2	6	16
Rated operational current, AC-23A		up to 500 V	A	32	63
		690 V	A	32	63
Rated operational power, AC-23[3]	The kW-ratings are accurate for	230 V	kW	7.5	18.5
	three-phase 1500 R.P.M.	400 V	kW	15	30
	standard asynchronous motors.	415 V	kW	15	30
		500 V	kW	18.5	37
		690 V	kW	22	55
Rated breaking capacity in category AC-23		up to 500 V	A	256	504
		690 V	A	256	504
Rated short-time withstand current, 1 s	r.m.s. -value		kA	1	2.5
Power loss / pole	With rated current, without fuse		W	2	4
Weight without accessories	3-pole switch fuses		kg	0.7	1.3
	4-pole switch fuses		kg	0.9	1.6
Built-in terminal size		Cu	mm^2	0.75...10	2.5...25
Terminal bolt size (included)	Metric thread diameter x length		mm		
Fuse-links bolts tightening torque			Nm		

*) = Utilization category B
1) Ambient temperature 60 °C: derating 20%
2) Mounting on "ceiling": derating 10%. Mounting on wall, horizontal fuses: derating 8%.
3) Some fuse links limit these figures further. Starting current characteristics must be considered separately.
4) Approval pending
5) 30 lb.in with cable size #14-10, 35 lb.in with cable size #8-4

OS 100G	OS 200	OS 400	OS 600	OS 800	OS 1200
UL/cULus[4)]	UL/cULus	UL/cULus	UL/cULus	UL/cULus	UL/cULus
UL/cULus	UL/cULus	UL/cULus	UL/cULus	UL/cULus	UL/cULus
UL/cULus	UL/cULus	UL/cULus	UL/cULus	UL/cULus	UL/cULus
100	200	400	600	800	1200
600	600	600	600	600	600
250	250	250	250	250	250
30/80.0	60/154.0	125.0/312.0	200/480.0	250/602.0	
60/77.0	125/156.0	250.0/302.0	400/477.0	500/590.0	
75/77.0	150/144.0	350.0/336.0	500/472.0	500/472.0	
200	200	200	200	200	200
100	200	400	600	800	1200
J	J	J	J	L	L
6000	6000	1000	1000	500	500
20 000	16 000	12 000	4000	3000	2000
OZXA-24	OZXA-200	OZXA-400	OZXA-800	OZXA-800	OZXA-1200
#14-2/0	#4-300MCM	#2-600MCM	(2)#2-600MCM	(2)#2-600MCM	(4)#2-600MCM
120	275	375	500	500	500
50	72	240	480	480	480
1 000	1 000	1 000	1 000	1 000	1000
10	10	10	10	10	10
	12	12	12	12	12
160/12	200/17	400/45	630/60	800/65	1250/110
160/10, 135/12	200/15	400/30	570/50	720/55	1000/85
70	95	240	2x185	2x240	2x400
160	200	400	630	800	1000 *)
160	200	400	630	800	1000 *)
45	60	132	200	250	315 *)
75	110	220	355	450	560 *)
75	110	230	355	450	560 *)
90	132	280	450	560	710 *)
132	200	400	630	710	1000 *)
1280	1600	3200	6400	6400	8000
1280	1600	3200	6400	6400	8000
5	8	14	20	20	
9	8	30	46	75	75
1.5	2.6	5.7	11.5	11.5	29
1.8					
M6x20	M8x25	M10x30	M12x40	M12x40	M12x50
4	4	20	40	40	40

Technical data, motor operators
Motorized switch fuses OSM32...1250

Data for motor operator OSM according to IEC 60947		Switch size	A	32...63
Rated operational voltage U_e	Pollution degree 3			
	50/60 Hz		V AC	220 - 240
Operating voltage range				0.85 - 1.1 x U_e
Operating time[1]	90° I - 0, 0 - I	220-240VAC	s	0.5 - 1.0
Nominal current I_n[1]		220-240VAC	A	0.3
Current Inrush[1]		220-240VAC	A	1.5
Overload fuse	Type / I_n / Capacity	220-240VAC	mA	T / 315 / H
	Size		mm	5x20
Operating rate	Cycle 0 - I - 0			
	Max. continuous	220-240VAC	cycles / min	1
	Max. short-time ≤ 10 cycles	220-240VAC	cycles / min	10
Overvoltage category				III
Rated impulse withstand voltage U_{imp}			kV	4
Dielectric strength		50 Hz 1 min.	kV	1.5
Impulse command		Min. impulse		
		duration	ms	100
Terminals				
	Voltage supply wiring for U_e		PE - N - L	PE - N - L
	Cross section	solid/stranded	mm^2	1.5 - 2.5
	Short-circuit protection device	max.fuse size	A	16
	Push-button control	C - I - O		no SELV
	Cross section	solid/stranded	mm^2	1.5 - 2.5
	Maximum cable length		m	100
State information of locking				no SELV
	Handle attached or motor operator locked	11-12-14 (C/O)	cosφ=1	5A/250V
	Locking motor operator	23-24 (NO)	cosφ=1	5A/250V
	Short-circuit protection device	MCB type and size		C/2A
Protection degree				IP20
Operating temperature			°C	-25...+55
Transportation and storage temperature			°C	-40...+70
Max. altitude			m	2000

[1] Under nominal conditions

100…160	200…250	315…400	630…800	1250
220 - 240	220 - 240	220 - 240	220 - 240	220 - 240
0.85 - 1.1 x U_e	0.85 - 1.1 x U_e	0.85 - 1.1 x U_e	0.85 - 1.1 x U_e	0.85 - 1.1 x U_e
0.5 - 1.0	0.5 - 1.0	0.5 - 1.2	0.5 - 1.5	0.8 - 2.0
0.3	0.3	0.5	0.9	1.4
1.5	1.5	2.5	4	10
T / 315 / H	T / 315 / H	T / 500 / H	T / 1000 / H	T / 2000 / H
5x20	5x20	5x20	5x20	5x20
1	1	1	1	0.5
10	10	10	10	5
III	III	III	III	
4	4	4	4	
1.5	1.5	1.5	1.5	
100	100	100	100	
PE - N - L	PE - N - L	PE - N - L	PE - N - L	
1.5 - 2.5	1.5 - 2.5	1.5 - 2.5	1.5 - 2.5	1.5 - 2.5
16	16	16	16	16
no SELV	no SELV	no SELV	no SELV	no SELV
1.5 - 2.5	1.5 - 2.5	1.5 - 2.5	1.5 - 2.5	1.5 - 2.5
100	100	100	100	100
no SELV	no SELV	no SELV	no SELV	no SELV
5A/250V	5A/250V	5A/250V	5A/250V	5A/250V
5A/250V	5A/250V	5A/250V	5A/250V	5A/250V
C/2A	C/2A	C/2A	C/2A	C/2A
IP20	IP20	IP20	IP20	IP20
-25…+55	-25…+55	-25…+55	-25…+55	-25…+55
-40…+70	-40…+70	-40…+70	-40…+70	-40…+70
2000	2000	2000	2000	2000

Ordering information
Switch fuses, DIN-type

OS40FD12000 (OS Mini)
S01382A



OS32G...63GD12P
S07000



OS125G...160GD12P
S07001



Front operated switch fuses

Including terminal bolt kit in OS125G...160G, a black ON-OFF plastic handle and shaft as standard. The handle is IP65 protected, padlockable in the OFF-position and with door interlock in the ON-position.The shaft is adjustable for a range of installation depths.

Rated op. current AC-20...23A ≤ 690V [A]	Rated op. power AC-23A 400/500/690V [kW]	Fuse size	No. of poles	Type	Order number	Units/ type [pcs]	Weight/ unit [kg]
Mechanism between the poles							
Protected tunnel terminals, IP20							
40	18.5/22/30	000	3	OS40FD12000	1SCA108914R1001	1	0.8
40	18.5/22/30	000	4	OS40FD22000N1	1SCA108938R1001	1	1.0
32	15/18.5/22	000	2	OS32GD11P	1SCA116703R1001	1	1.0
32	15/18.5/22	000	3	OS32GD12P	1SCA114581R1001	1	1.3
32	15/18.5/22	000	4	OS32GD22N2P	1SCA115202R1001	1	1.6
32	15/18.5/22	000	4	OS32GD22FP	1SCA115205R1001	1	1.6
63	30/37/55	000	2	OS63GD11P	1SCA116711R1001	1	1.0
63	30/37/55	000	3	OS63GD12P	1SCA115227R1001	1	1.3
63	30/37/55	000	4	OS63GD22N2P	1SCA115230R1001	1	1.6
63	30/37/55	000	4	OS63GD22FP	1SCA115232R1001	1	1.6
Terminal bolt kit							
125	55/75/110	000, 00	2	OS125GD11P	1SCA116712R1001	1	1.2
125	55/75/110	000, 00	3	OS125GD12P	1SCA115641R1001	1	1.5
125	55/75/110	000, 00	4	OS125GD22N2P	1SCA115880R1001	1	1.8
125	55/75/110	000, 00	4	OS125GD22FP	1SCA116732R1001	1	1.8
160	75/90/132	000, 00	2	OS160GD11P	1SCA116713R1001	1	1.2
160	75/90/132	000, 00	3	OS160GD12P	1SCA115643R1001	1	1.5
160	75/90/132	000, 00	4	OS160GD22N2P	1SCA115884R1001	1	1.8
160	75/90/132	000, 00	4	OS160GD22FP	1SCA116855R1001	1	1.8

F = Fused switched neutral
N1 = Non-fused switched neutral on the left side
N2 = Non-fused switched neutral on the right side

Shafts and handles included as standard

Suitable for switches	Included shaft	Included handle	Incl. terminal bolts
OS40F_ (OS Mini)	OXP6X150	OHB65J6	
OS32G...63G_P	OXP6X161	OHB45J6	
OS125G...160G_P	OXP6X161	OHB65J6	M8X25

Ordering information
Switch fuses, DIN-type

OS200...250D22N2P
S02110A



OS1250D12P
S07076



Front operated switch fuses

Including terminal bolt kit, a black ON-OFF plastic handle and shaft as standard. The handle is IP65 protected, padlockable in the OFF-position and with door interlock in the ON-position. The shaft is adjustable for a range of installation depths. OS1250DA_: a fuse replacement tool is integrated in the fuse cover.

Rated op. current AC-20...23A ≤ 690V [A]	Rated op. power AC-23A 400/500/690V [kW]	Fuse size	No. of poles	Type	Order number	Units/ type [pcs]	Weight/ unit [kg]
Mechanism between the poles							
200	110/132/200	3	00	OS200DZ12P	1SCA022820R9150	1	3.3
200	110/132/200	2	0	OS200D11P	1SCA022759R9650	1	2.4
200	110/132/200	3	0	OS200D12P	1SCA022721R3050	1	3.3
200	110/132/200	4	0	OS200D22N2P	1SCA022721R3130	1	4.2
250	145/170/250	2	0-1	OS250D11P	1SCA022752R8710	1	3.5
250	145/170/250	3	0-1	OS250D12P	1SCA022726R8380	1	4.3
250	145/170/250	4	0-1	OS250D22N2P	1SCA022726R8460	1	5.1
400	230/280/400	2	0-2	OS400D11P	1SCA110207R1001	1	5.4
400	230/280/400	3	0-2	OS400D12P	1SCA022753R3800	1	7.1
400	230/280/400	4	0-2	OS400D22N2P	1SCA022753R1770	1	9.1
630	355/450/630	2	3	OS630D11P	1SCA116381R1001	1	10.3
630	355/450/630	3	3	OS630D12P	1SCA022825R3810	1	13.6
630	355/450/630	4	3	OS630D22N2P	1SCA022825R4450	1	16.9
800	450/560/710	2	3	OS800D11P	1SCA116655R1001	1	10.3
800	450/560/710	3	3	OS800D12P	1SCA022825R5340	1	13.6
800	450/560/710	4	3	OS800D22N2P	1SCA022825R5510	1	16.9
1250A[1)]	560/710/1000	3	4	OS1250D12P	1SCA105246R1001	1	46
1250A[1)]	560/710/1000	4	4	OS1250D22N2P	1SCA107933R1001	1	55
1250A[1)]	560/710/1000	3	4a	OS1250DA12P	1SCA105241R1001	1	46
1250A[1)]	560/710/1000	4	4a	OS1250DA22N2P	1SCA107935R1001	1	55

N2 = Non-fused switched neutral on the right side
[1)] 1250A / AC-20...22A, 1000A / AC-23A

Shafts and handles included as standard

Suitable for switches	Included shaft	Included handle	Incl. terminal bolts
OS200_P	OXP6X210	OHB65J6	M8X25
OS250_P	OXP6X210	OHB65J6	M10X30
OS400_P	OXP12X250	OHB95J12	M10X30
OS630...800_P	OXP12X280	OHB145J12	M12X40
OS1250_P	OXP12X395	OHB274J12	M12x50

Ordering information
Switch fuses, DIN-type

OS32G...63GD03P
A04172



OS125G...160GD03P
A04173



Front operated switch fuses

Including terminal bolt kit in OS125G...160G, a black ON-OFF plastic handle and shaft as standard. The handle is IP65 protected, padlockable in the OFF-position and with door interlock in the ON-position. The shaft is adjustable for a range of installation depths.

Rated op. current AC-20...23A ≤ 690V [A]	Rated op. power AC-23A 400/500/690V [kW]	Fuse size	No. of poles	Type	Order number	Units/ type [pcs]	Weight/ unit [kg]
Mechanism at the end of the switch fuse							
Protected tunnel terminals, IP20							
32	15/18.5/22	000	2	OS32GD02P	1SCA116714R1001	1	1.0
32	15/18.5/22	000	3	OS32GD03P	1SCA115189R1001	1	1.3
32	15/18.5/22	000	4	OS32GD04N2P	1SCA115193R1001	1	1.6
32	15/18.5/22	000	4	OS32GD04FP	1SCA115196R1001	1	1.6
63	30/37/55	000	2	OS63GD02P	1SCA116715R1001	1	1.0
63	30/37/55	000	3	OS63GD03P	1SCA115207R1001	1	1.3
63	30/37/55	000	4	OS63GD04N2P	1SCA115209R1001	1	1.6
63	30/37/55	000	4	OS63GD04FP	1SCA115228R1001	1	1.6
Terminal bolt kit							
125	55/75/110	000, 00	2	OS125GD02P	1SCA116716R1001	1	1.2
125	55/75/110	000, 00	3	OS125GD03P	1SCA115639R1001	1	1.5
125	55/75/110	000, 00	4	OS125GD04N2P	1SCA115877R1001	1	1.8
125	55/75/110	000, 00	4	OS125GD04FP	1SCA115686R1001	1	1.8
160	75/90/132	000, 00	2	OS160GD02P	1SCA116717R1001	1	1.2
160	75/90/132	000, 00	3	OS160GD03P	1SCA115399R1001	1	1.5
160	75/90/132	000, 00	4	OS160GD04N2P	1SCA115882R1001	1	1.8
160	75/90/132	000, 00	4	OS160GD04FP	1SCA115402R1001	1	1.8

F = Fused switched neutral
N2 = Non-fused switched neutral on the right side

Shafts and handles included as standard

Suitable for switches	Included shaft	Included handle	Incl. terminal bolts
OS32G...63G_P	OXP6X161	OHB45J6	
OS125G...160G_P	OXP6X161	OHB65J6	M8X25

Ordering information
Switch fuses, DIN-type

OS200...250D03P
S02107A

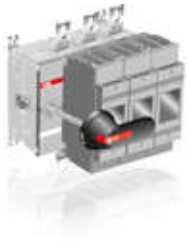

OS200...250D03N3P
S02109A

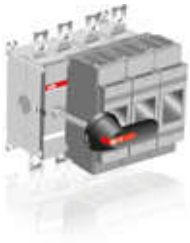

OS200...250D04_P
S02108A

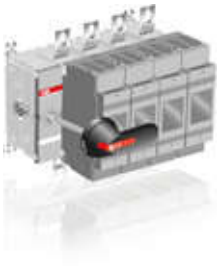

OS400D03P
S01835A



Front operated switch fuses

Including terminal bolt kit, a black ON-OFF plastic handle and shaft as standard. The handle is IP65 protected, padlockable in the OFF-position and with door interlock in the ON-position. The shaft is adjustable for a range of installation depths.

Rated op. current AC-20...23A ≤ 690V [A]	Rated op. power AC-23A 400/500/690V [kW]	Fuse size	No. of poles	Type	Order number	Units/ type [pcs]	Weight/ unit [kg]
Mechanism at the end of the switch fuse							
200	110/132/200	00	3	OS200DZ03P	1SCA022797R3440	1	3.3
200	110/132/200	00	4	OS200DZ04N2P	1SCA022820R9230	1	4.2
200	110/132/200	0	2	OS200D02P	1SCA022759R9220	1	2.4
200	110/132/200	0	3	OS200D03P	1SCA022709R9500	1	3.3
200	110/132/200	0	3+N	OS200D03N3P	1SCA022749R8710	1	3.4
200	110/132/200	0	4	OS200D04N2P	1SCA022709R9680	1	4.2
200	110/132/200	0	4	OS200D04FP	1SCA022725R4750	1	4.2
250	145/170/250	0-1	2	OS250D02P	1SCA022760R0170	1	3.5
250	145/170/250	0-1	3	OS250D03P	1SCA022719R0090	1	4.3
250	145/170/250	0-1	3+N	OS250D03N3P	1SCA022749R9430	1	4.4
250	145/170/250	0-1	4	OS250D04N2P	1SCA022719R2380	1	5.1
250	145/170/250	0-1	4	OS250D04FP	1SCA022726R8620	1	5.1
400	230/280/400	0-2	2	OS400D02P	1SCA022811R2740	1	5.4
400	230/280/400	0-2	3	OS400D03P	1SCA022719R0250	1	7.1
400	230/280/400	0-2	3+N	OS400D03N3P	1SCA022753R9320	1	7.5
400	230/280/400	0-2	4	OS400D04N2P	1SCA022719R2460	1	9.1
400	230/280/400	0-2	4	OS400D04FP	1SCA022753R7110	1	9.1

F = Fused switched neutral, N2 = Non-fused switched neutral on the right side
N3 = Include a detachable neutral link integrated into the mechanism

Shafts and handles included as standard

Suitable for switches	Included shaft	Included handle	Incl. terminal bolts
OS200_P	OXP6X210	OHB65J6	M8X25
OS250_P	OXP6X210	OHB65J6	M10X30
OS400_P	OXP12X250	OHB95J12	M10X30

Ordering information
Switch fuses, DIN-type

OS630...800D03P
KE00036

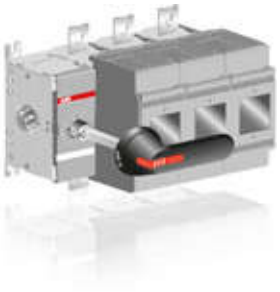

OS1250D03P
S07075



Front operated switch fuses

Including terminal bolt kit, a black ON-OFF plastic handle and shaft as standard. The handle is IP65 protected, padlockable in the OFF-position and with door interlock in the ON-position. The shaft is adjustable for a range of installation depths. OS1250DA_: a fuse replacement tool is integrated in the fuse cover.

Rated op. current AC-20...23A ≤ 690V [A]	Rated op. power AC-23A 400/500/690V [kW]	Fuse size	No. of poles	Type	Order number	Units/ type [pcs]	Weight/ unit [kg]
Mechanism at the end of the switch fuse							
630	355/450/630	3	2	OS630D02P	1SCA107745R1001	1	10.3
630	355/450/630	3	3	OS630D03P	1SCA022825R2830	1	13.6
630	355/450/630	3	3+N	OS630D03N3P	1SCA100858R1001	1	14.5
630	355/450/630	3	4	OS630D04N2P	1SCA022825R4290	1	16.9
630	355/450/630	3	4	OS630D04FP	1SCA022825R4610	1	16.9
800	450/560/710	3	2	OS800D02P	1SCA022837R2650	1	10.3
800	450/560/710	3	3	OS800D03P	1SCA022825R4880	1	13.6
800	450/560/710	3	3+N	OS800D03N3P	1SCA100859R1001	1	14.5
800	450/560/710	3	4	OS800D04N2P	1SCA022825R5180	1	16.9
800	450/560/710	3	4	OS800D04FP	1SCA022825R5000	1	16.9
1250A[1)]	560/710/1000	4	2	OS1250D02P	1SCA114051R1001	1	37
1250A[1)]	560/710/1000	4	3	OS1250D03P	1SCA105475R1001	1	46
1250A[1)]	560/710/1000	4	3+N	OS1250D03N3P	1SCA107932R1001	1	47
1250A[1)]	560/710/1000	4	4	OS1250D04N2P	1SCA105248R1001	1	55
1250A[1)]	560/710/1000	4	4	OS1250D04FP	1SCA105473R1001	1	55
1250A[1)]	560/710/1000	4a	2	OS1250DA02P	1SCA114059R1001	1	37
1250A[1)]	560/710/1000	4a	3	OS1250DA03P	1SCA105238R1001	1	46
1250A[1)]	560/710/1000	4a	3+N	OS1250DA03N3P	1SCA107934R1001	1	47
1250A[1)]	560/710/1000	4a	4	OS1250DA04N2P	1SCA105243R1001	1	55
1250A[1)]	560/710/1000	4a	4	OS1250DA04FP	1SCA105240R1001	1	55

F = Fused switched neutral, N2 = Non-fused switched neutral on the right side
N3 = Include a detachable neutral link integrated into the mechanism
[1)] 1250A / AC-21...22A, 1000A / AC-23A

Shafts and handles included as standard

Suitable for switches	Included shaft	Included handle	Incl. terminal bolts
OS630...800_P	OXP12X280	OHB145J12	M12X40
OS1250_P	OXP12X395	OHB274J12	M12x50

Ordering information
Switch fuses, DIN-type

OS32G...63G03K
S07002



OS125G...160GD03K
S07003



Front operated switch fuses with direct mounted handle

Including terminal bolt kit in OS125G...160G, a black Test-OFF-ON plastic handle and shaft as standard. The handle is padlockable in the OFF-position. Types OS1250DA_: a fuse replacement tool is integrated in the fuse cover.

Rated op. current AC-20...23A ≤ 690V [A]	Rated op. power AC-23A 400/500/690V [kW]	Fuse size	No. of poles	Type	Order number	Units/ type [pcs]	Weight/ unit [kg]
Mechanism at the end of the switch fuse							
Protected tunnel terminals, IP20							
32	15/18.5/22	000	3	OS32GD03K	1SCA116733R1001	1	1.3
32	15/18.5/22	000	4	OS32GD04N2K	1SCA116734R1001	1	1.6
32	15/18.5/22	000	4	OS32GD04FK	1SCA116737R1001	1	1.6
63	30/37/55	000	3	OS63GD03K	1SCA116738R1001	1	1.3
63	30/37/55	000	4	OS63GD04N2K	1SCA116876R1001	1	1.6
63	30/37/55	000	4	OS63GD04FK	1SCA116739R1001	1	1.6
Terminal bolt kit							
125	55/75/110	000, 00	3	OS125GD03K	1SCA116878R1001	1	1.5
125	55/75/110	000, 00	4	OS125GD04N2K	1SCA116740R1001	1	1.8
125	55/75/110	000, 00	4	OS125GD04FK	1SCA116741R1001	1	1.8
160	75/90/132	000, 00	3	OS160GD03K	1SCA116742R1001	1	1.5
160	75/90/132	000, 00	4	OS160GD04N2K	1SCA116743R1001	1	1.8
160	75/90/132	000, 00	4	OS160GD04FK	1SCA116880R1001	1	1.8

F = Fused fourth pole
N2 = Non-fused switched neutral on the right side

Shafts and handles included as standard

Suitable for switches	Included shaft	Included handle	Incl. terminal bolts
OS32G...63G_K		OSV200BK	-
OS125G...160G_K		OSV200BK	M8X25

Ordering information
Switch fuses, DIN-type

OS200...250D03K
S02013A



Front operated switch fuses with direct mounted handle

Including terminal bolt kit, a black Test-OFF-ON plastic handle and shaft as standard. The handle is padlockable in the OFF-position. Types OS1250DA_: a fuse replacement tool is integrated in the fuse cover.

Rated op. current AC-20...23A ≤ 690V [A]	Rated op. power AC-23A 400/500/690V [kW]	Fuse size	No. of poles	Type	Order number	Units/ type [pcs]	Weight/ unit [kg]
Mechanism at the end of the switch fuse							
Terminal bolt kit							
200	110/132/200	0	3	OS200D03K	1SCA022764R7130	1	3.3
200	110/132/200	0	4	OS200D04N2K	1SCA022768R7430	1	4.2
250	145/170/250	0-1	3	OS250D03K	1SCA022763R6360	1	4.3
250	145/170/250	0-1	4	OS250D04N2K	1SCA022763R6440	1	5.1
400	230/280/400	0-2	3	OS400D03K	1SCA022779R5410	1	7.0
400	230/280/400	0-2	4	OS400D04N2K	1SCA022763R7250	1	9.0
630	355/450/630	3	3	OS630D03K	1SCA108704R1001	1	13
630	355/450/630	3	4	OS630D04N2K	1SCA108705R1001	1	16
800	450/560/710	3	3	OS800D03K	1SCA108725R1001	1	13
800	450/560/710	3	4	OS800D04N2K	1SCA108722R1001	1	16
1250A[1)]	560/710/1000	4	3	OS1250D03K	1SCA108718R1001	1	45
1250A[1)]	560/710/1000	4	4	OS1250D04N2K	1SCA108719R1001	1	54
1250A[1)]	560/710/1000	4a	3	OS1250DA03K	1SCA108720R1001	1	45
1250A[1)]	560/710/1000	4a	4	OS1250DA04N2K	1SCA108721R1001	1	54

N2 = Non-fused switched neutral on the right side
[1)] 1250A / AC-20...22A, 1000A / AC-23A

Shafts and handles included as standard

Suitable for switches	Included shaft	Included handle	Incl. terminal bolts
OS200_K		OSV250DK	M8X25
OS250_K		OSV250DK	M10X30
OS400_K		OSV400DK	M10X30
OS630...800_K		OSV800DK	M12X40
OS1250_K		OSV1250DK	M12x50

Ordering information
Switch fuses, DIN-type

OS40FDS_ (OS Mini)
S01384A



OS32G...63GDS30K
S07009



OS100G...160GDS30K
S07010



Side operated switch fuses with pistol handle

Including a black ON-OFF plastic handle and shaft as standard. The handle is IP65 protected, padlockable in the OFF-position and with door interlock in the ON-position. The shaft is adjustable for a range of installation depths.

Rated op. current AC-20...23A ≤ 690V [A]	Rated op. power AC-23A 400/500/690V [kW]	Fuse size	No. of poles	Type	Order number	Units/ type [pcs]	Weight/ unit [kg]
Shaft mounting depths measured from the left side of the switch, 3-pole: H=157…164 mm and 4-pole: H= 193…200 mm. Protected tunnel terminals, IP20.							
40	18.5/22/30	000	3	OS40FDS30000	1SCA108942R1001	1	0.9
40	18.5/22/30	000	3[1)]	OS40FDS30000-N	1SCA109012R1001	1	0.9
40	18.5/22/30	000	4	OS40FDS40000N1	1SCA108954R1001	1	1.1

N1 = Non-fused switched neutral on the left side
[1)] Detachable neutral link

Side operated switch fuses with direct mounted handle

Including terminal bolt kit in OS125G...160G, a black Test-ON-OFF plastic handle and shaft as standard. The handle is padlockable in the OFF-position.

Rated op. current AC-20...23A ≤ 690V [A]	Rated op. power AC-23A 400/500/690V [kW]	Fuse size	No. of poles	Type	Order number	Units/ type [pcs]	Weight/ unit [kg]
Protected tunnel terminals, IP20.							
32	15/18.5/22	000	3	OS32GDS30K	1SCA115929R1001	1	1.3
32	15/18.5/22	000	4	OS32GDS40N1K	1SCA115930R1001	1	1.6
32	15/18.5/22	000	4	OS32GDS40N2K	1SCA116402R1001	1	1.6
63	30/37/55	000	3	OS63GDS30K	1SCA115931R1001	1	1.3
63	30/37/55	000	4	OS63GDS40N1K	1SCA115932R1001	1	1.6
63	30/37/55	000	4	OS63GDS40N2K	1SCA116403R1001	1	1.6
Terminal bolt kit							
125	55/75/110	000, 00	3	OS125GDS30K	1SCA115933R1001	1	1.5
125	55/75/110	000, 00	4	OS125GDS40N2K	1SCA115934R1001	1	1.8
160	75/90/132	000, 00	3	OS160GDS30K	1SCA115935R1001	1	1.5
160	75/90/132	000, 00	4	OS160GDS40N2K	1SCA115939R1001	1	1.8

N1 = Non-fused switched neutral on the left side
N2 = Non-fused switched neutral on the right side

Shafts and handles incl. as standard

Suitable for switches	Included shaft	Included handle	Incl. terminal bolts
OS40FDS_ (OS Mini)	OXP6X70-V0	OHB65J6	
OS32G...63_K	OXP6X42-TO	OHB65D6	
OS125G...160G_K	OXP6X42-TO	OHB65D6	M8X25

Ordering information
Switch fuses, DIN-type

OS200DS03K
KE00075



Side operated switch fuses with direct mounted handle

Including terminal bolt kit, a black Test-ON-OFF plastic handle and shaft as standard. The handle is padlockable in the OFF-position.

Rated op. current AC-20...23A ≤ 690V [A]	Rated op. power AC-23A 400/500/690V [kW]	Fuse size	No. of poles	Type	Order number	Units/ type [pcs]	Weight/ unit [kg]
Terminal bolt kit							
200	110/132/200	0	3	OS200DS03K	1SCA022871R0810	1	3.6
200	110/132/200	0	3	OS200DS30K	1SCA022871R1450	1	3.6
200	110/132/200	0	4	OS200DS04FK	1SCA022871R1020	1	4.5
200	110/132/200	0	4	OS200DS40FK	1SCA022871R1610	1	4.5
250	145/170/250	0-1	3	OS250DS03K	1SCA022860R3130	1	4.6
250	145/170/250	0-1	3	OS250DS30K	1SCA022871R2260	1	4.6
250	145/170/250	0-1	4	OS250DS04FK	1SCA022860R3300	1	5.4
250	145/170/250	0-1	4	OS250DS40FK	1SCA022871R2420	1	5.4
400	230/280/400	0-2	3	OS400DS03K	1SCA022860R3560	1	7.5
400	230/280/400	0-2	3	OS400DS30K	1SCA022871R2930	1	7.5
400	230/280/400	0-2	4	OS400DS04FK	1SCA022860R3720	1	9.5
400	230/280/400	0-2	4	OS400DS40FK	1SCA022871R3150	1	9.5
630	355/450/630	3	3	OS630DS03K	1SCA108129R1001	1	14.1
630	355/450/630	3	3	OS630DS30K	1SCA108136R1001	1	14.1
630	355/450/630	3	4	OS630DS04FK	1SCA108132R1001	1	17
630	355/450/630	3	4	OS630DS40FK	1SCA108138R1001	1	17
800	450/560/710	3	3	OS800DS03K	1SCA108093R1001	1	14.1
800	450/560/710	3	3	OS800DS30K	1SCA108099R1001	1	14.1
800	450/560/710	3	4	OS800DS04FK	1SCA108095R1001	1	17
800	450/560/710	3	4	OS800DS40FK	1SCA108101R1001	1	17

F = Fused switched neutral

Shafts and handles included as standard:

Suitable for switches	Included shaft	Included handle	Incl. terminal bolts
OS200_K	OXP6X42-TO	OHB65D6	M8x25
OS250_K	OXP6X42-TO	OHB65D6	M10x30
OS315...400_K	OXP12X47-TO	OHB95D12	M10x30
OS630...800_K	OXP12X59-TO	OHB145D12	M12x40

Ordering information
Switch fuses, DIN-type

OS32G...63GDS30
S07169



OS125G...160GDS30
S07010



OS200...250DS03
KE00074



Side operated switch fuses without handle

Including terminal bolt kit (OS125G…800) as standard. The handle and shaft have to be ordered separately.

Rated op. current AC-20...23A ≤ 690V [A]	Rated op. power AC-23A 400/500/690V [kW]	Fuse size	No. of poles	Type	Order number	Units/ type [pcs]	Weight/ unit [kg]
Protected tunnel terminals, IP20.							
32	15/18.5/22	000	3	OS32GDS30	1SCA115963R1001	1	1.3
32	15/18.5/22	000	4	OS32GDS40N2	1SCA116046R1001	1	1.6
32	15/18.5/22	000	4	OS32GDS40F	1SCA116755R1001	1	1.6
63	30/37/55	000	3	OS63GDS30	1SCA116007R1001	1	1.3
63	30/37/55	000	4	OS63GDS40N2	1SCA116047R1001	1	1.6
63	30/37/55	000	4	OS63GDS40F	1SCA116877R1001	1	1.6
Terminal bolt kit							
125	55/75/110	000, 00	3	OS125GDS30	1SCA115966R1001	1	1.5
125	55/75/110	000, 00	4	OS125GDS40N2	1SCA115967R1001	1	1.8
125	55/75/110	000, 00	4	OS125GDS40F	1SCA116756R1001	1	1.8
160	75/90/132	000, 00	3	OS160GDS30	1SCA115968R1001	1	1.5
160	75/90/132	000, 00	4	OS160GDS40N2	1SCA115969R1001	1	1.8
160	75/90/132	000, 00	4	OS160GDS40F	1SCA116757R1001	1	1.8
200	110/132/200	0	3	OS200DS03	1SCA022871R0720	1	3.5
200	110/132/200	0	3	OS200DS30	1SCA022871R1370	1	3.5
200	110/132/200	0	4	OS200DS04F	1SCA022871R0990	1	4.4
200	110/132/200	0	4	OS200DS40F	1SCA022871R1530	1	4.4
250	145/170/250	0-1	3	OS250DS03	1SCA022860R3050	1	4.5
250	145/170/250	0-1	3	OS250DS30	1SCA022871R2180	1	4.5
250	145/170/250	0-1	4	OS250DS04F	1SCA022860R3210	1	5.3
250	145/170/250	0-1	4	OS250DS40F	1SCA022871R2340	1	5.3
400	230/280/400	0-2	3	OS400DS03	1SCA022860R3480	1	7.3
400	230/280/400	0-2	3	OS400DS30	1SCA022871R2850	1	7.3
400	230/280/400	0-2	4	OS400DS04F	1SCA022860R3640	1	9.3
400	230/280/400	0-2	4	OS400DS40F	1SCA022871R3070	1	9.3
630	355/450/630	3	3	OS630DS03	1SCA108128R1001	1	13.9
630	355/450/630	3	3	OS630DS30	1SCA108135R1001	1	13.9
630	355/450/630	3	4	OS630DS04F	1SCA108131R1001	1	16.8
630	355/450/630	3	4	OS630DS40F	1SCA108137R1001	1	16.8
800	450/560/710	3	3	OS800DS03	1SCA108092R1001	1	13.9
800	450/560/710	3	3	OS800DS30	1SCA108098R1001	1	13.9
800	450/560/710	3	4	OS800DS04F	1SCA108094R1001	1	16.8
800	450/560/710	3	4	OS800DS40F	1SCA108100R1001	1	16.8

F = Fused switched neutral, N2 = Non-fused switched neutral on the right side

Terminal bolt kit included as standard

Suitable for switches	Included shaft	Included handle	Incl. terminal bolts
OS125G...200			M8X25
OS250…400			M10x30
OS630…800			M12x40

Ordering information
Switch fuses, DIN-type

OS200...250D22BBN2P
S07177



Special connected switch fuses, back in, back out connection (BB)

Including terminal bolt kit, a black ON-OFF plastic handle and shaft as standard. The handle is IP65 protected, padlockable in the OFF-position and with door interlock in the ON-position. The shaft is adjustable for a range of installation depths.

Rated op. current AC-20...23A ≤ 690V [A]	Rated op. power AC-23A 400/500/690V [kW]	Fuse*) size	No. of poles	Type	Order number	Units/ type [pcs]	Weight/ unit [kg]
Mechanism between the poles							
125	55/75/110	000, 00	3	OS125GD12BBP	1SCA120808R1001	1	2.3
160	75/90/132	000, 00	3	OS160GD12BBP	1SCA120752R1001	1	2.3
200	100/140/180	0	3	OS200D12BBP	1SCA102156R1001	1	3.3
200	100/140/180	0	4	OS200D22BBN2P	1SCA102006R1001	1	4.2
250	132/170/240	0...1	3	OS250D12BBP	1SCA102207R1001	1	4.3
250	132/170/240	0...1	4	OS250D22BBN2P	1SCA102212R1001	1	5.1
400	220/280/355	0...2	3	OS400D12BBP	1SCA102280R1001	1	7.1
400	220/280/355	0...2	4	OS400D22BBN2P	1SCA102283R1001	1	9.1

*) Fuse standards DIN 43620, IEC 60269-2-1 sec. I

Shafts and handles included as standard

Suitable for switches	Included shaft	Included handle	Incl. terminal bolts
OS125G_...160G_P	OXP6X161	OHB65J6	M8x25
OS200_P	OXP6X210	OHB65J6	M8x25
OS250_P	OXP6X210	OHB65J6	M10x30
OS400_P	OXP12X250	OHB95J12	M10x30

Ordering information
Switch fuses, DIN-type

OS200...250D03BBP
S07175



OS400D03BBP
S07176



Special connected switch fuses, back in, back out connection (BB)

Including terminal bolt kit, a black ON-OFF plastic handle and shaft as standard. The handle is IP65 protected, padlockable in the OFF-position and with door interlock in the ON-position. The shaft is adjustable for a range of installation depths.

Rated op. current AC-20...23A ≤ 690V [A]	Rated op. power AC-23A 400/500/690V [kW]	Fuse*) size	No. of poles	Type	Order number	Units/ type [pcs]	Weight/ unit [kg]
Mechanism at the end of the switch fuse							
125	55/75/110	000, 00	3	OS125GD03BBP	1SCA120802R1001	1	2.3
125	55/75/110	000, 00	4	OS125GD04BBN2P	1SCA120806R1001	1	2.7
160	75/90/132	000, 00	3	OS160GD03BBP	1SCA120655R1001	1	2.3
160	75/90/132	000, 00	4	OS160GD04BBN2P	1SCA120661R1001	1	2.7
200	100/140/180	0	3	OS200D03BBP	1SCA102150R1001	1	3.3
200	100/140/180	0	4	OS200D04BBN2P	1SCA102139R1001	1	4.2
250	132/170/240	0...1	3	OS250D03BBP	1SCA102190R1001	1	4.3
250	132/170/240	0...1	4	OS250D04BBN2P	1SCA102205R1001	1	5.1
400	220/280/355	0...2	3	OS400D03BBP	1SCA102260R1001	1	7.1
400	220/280/355	0...2	4	OS400D04BBN2P	1SCA102289R1001	1	9.1

*) Fuse standards DIN 43620, IEC 60269-2-1 sec. I

Shafts and handles included as standard

Suitable for switches	Included shaft	Included handle	Incl. terminal bolts
OS125G_...160G_P	OXP6X161	OHB65J6	M8x25
OS200_P	OXP6X210	OHB65J6	M8x25
OS250_P	OXP6X210	OHB65J6	M10x30
OS400_P	OXP12X250	OHB95J12	M10x30

Ordering information
Switch fuses, DIN-type

OS125G...160GD12LRP
S07174



OS250D12LRP
S07172



OS400D12LRP
S07173

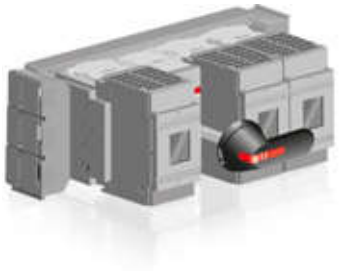

Special connected switch fuses, left in, right out connection (LR)

Including terminal bolt kit, a black ON-OFF plastic handle and shaft as standard. The handle is IP65 protected, padlockable in the OFF-position and with door interlock in the ON-position. The shaft is adjustable for a range of installation depths. Terminal angles for side terminals are accessories and are not included in standard delivery.

Rated op. current AC-20...23A ≤ 690V [A]	Rated op. power AC-23A 400/500/690V [kW]	Fuse*) size	No. of poles	Type	Order number	Units/ type [pcs]	Weight/ unit [kg]
Mechanism between the poles							
125	55/75/110	000, 00	3	OS125GD12LRP	1SCA120062R1001	1	2.9
125	55/75/110	000, 00	3	OS125GD21LRP	1SCA120255R1001	1	2.9
125	55/75/110	000, 00	4	OS125GD22LRP	1SCA120263R1001	1	3.7
160	75/90/132	000, 00	3	OS160GD12LRP	1SCA120267R1001	1	2.9
160	75/90/132	000, 00	3	OS160GD21LRP	1SCA120294R1001	1	2.9
160	75/90/132	000, 00	4	OS160GD22LRP	1SCA120275R1001	1	3.7
250	132/170/240	0...1	3	OS250D12LRP	1SCA022852R8410	1	6.2
250	132/170/240	0...1	3	OS250D21LRP	1SCA022852R8500	1	6.2
250	132/170/240	0...1	4	OS250D22LRP	1SCA022853R0310	1	9.1
400	220/280/355	0...2	3	OS400D12LRP	1SCA022853R2280	1	9.6
400	220/280/355	0...2	3	OS400D21LRP	1SCA022853R2360	1	9.6
400	220/280/355	0...2	4	OS400D22LRP	1SCA022853R4140	1	12.8

*) Fuse standards DIN 43620, IEC 60269-2-1 sec. I

Shafts and handles included as standard

Suitable for switches	Included shaft	Included handle	Incl. terminal bolts
OS125G_...160G_P	OXP6X161	OHB65J6	M8x25
OS250_P	OXP6X210	OHB65J6	M8x16
OS400_P	OXP12X250	OHB95J12	M8x16

Ordering information
Switch fuses, BS-type

(OS Mini)
OS20...32FB12A1
OS32FB12A2
OS32FB12F1
S01133A



OS32G...63GB12P
S07000



OS32G...63GB12P
S07001



Front operated switch fuses

Including a terminal bolt kit in OS100G...160G, a black ON-OFF plastic handle and shaft as standard. The handle is IP65 protected, padlockable in the OFF-position and with door interlock in the ON-position. The shaft is adjustable for a range of installation depths.

Rated op. current AC-20...23A ≤ 690V [A]	Rated op. power AC-23A 400/500/690V [kW]	Fuse size	No. of poles	Type	Order number	Units/ type [pcs]	Weight/ unit [kg]
Mechanism between the poles							
Protected tunnel terminals, IP20							
20	7.5/11/15	A1	3	OS20FB12A1	1SCA108790R1001	1	0.7
20	7.5/11/15	A1	4	OS20FB22A1N1	1SCA108796R1001	1	0.9
32	15/18/25	A1	3	OS32FB12A1	1SCA108840R1001	1	0.7
32	15/18/25	A1	4	OS32FB22A1N1	1SCA108853R1001	1	0.9
32	15/18.5/22	A2	3	OS32FB12A2	1SCA108847R1001	1	0.7
32	15/18.5/22	A2	4	OS32FB22A2N1	1SCA108863R1001	1	0.9
32	15/18.5/22	F1	3	OS32FB12F1	1SCA108851R1001	1	0.7
32	15/18.5/22	F1	4	OS32FB22F1N1	1SCA109003R1001	1	0.9
32	15/18.5/22	A2, A3	2	OS32GB11P	1SCA116718R1001	1	1.0
32	15/18.5/22	A2, A3	3	OS32GB12P	1SCA115331R1001	1	1.3
32	15/18.5/22	A2, A3	4	OS32GB22N1P	1SCA115345R1001	1	1.6
63	30/37/55	A2, A3	2	OS63GB11P	1SCA116872R1001	1	1.0
63	30/37/55	A2, A3	3	OS63GB12P	1SCA115325R1001	1	1.3
63	30/37/55	A2, A3	4	OS63GB22N1P	1SCA114601R1001	1	1.6
Terminal bolt kit							
100	55/55/90	A2-A4[1)]	2	OS100GB11P	1SCA116851R1001	1	1.2
100	55/55/90	A2-A4[1)]	3	OS100GB12P	1SCA114586R1001	1	1.5
100	55/55/90	A2-A4[1)]	4	OS100GB22N1P	1SCA114602R1001	1	1.8
125	55/75/110	A2-A4[1)]	2	OS125GB11P	1SCA116853R1001	1	1.2
125	55/75/110	A2-A4[1)]	3	OS125GB12P	1SCA114603R1001	1	1.5
125	55/75/110	A2-A4[1)]	4	OS125GB22N1P	1SCA115903R1001	1	1.8
160	75/90/132	A2-A4[1)]	2	OS160GB11P	1SCA117430R1001	1	1.2
160	75/90/132	A2-A4[1)]	3	OS160GB12P	1SCA115637R1001	1	1.5
160	75/90/132	A2-A4[1)]	4	OS160GB22N1P	1SCA115899R1001	1	1.8

N1 = Non-fused switched neutral on the left side
[1)] Max. fuse diameter 32 mm

Shafts and handles included as standard

Suitable for switches	Included shaft	Included handle	Incl. terminal bolts
OS20...32F_ (OS Mini)	OXP6X150	OHB65J6	
OS32G...63G_P	OXP6X161	OHB45J6	
OS100G...160G_P	OXP6X161	OHB65J6	M8X25

Ordering information
Switch fuses, BS-type

OS200...250B22N2P
S02110A



OS1250B12P
S07076

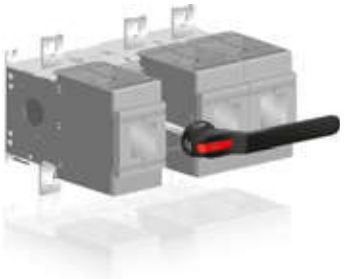

Front operated switch fuses

Including terminal bolt kit, a black ON-OFF plastic handle and shaft as standard. The handle is IP65 protected, padlockable in the OFF-position and with door interlock in the ON-position. The shaft is adjustable for a range of installation depths.

Rated op. current AC-20...23A ≤ 690V [A]	Rated op. power AC-23A 400/500/690V [kW]	Fuse size	No. of poles	Type	Order number	Units/ type [pcs]	Weight/ unit [kg]
Mechanism between the poles							
200	110/132/200	B1-B2	3	OS200B12P	1SCA022721R3210	1	3.3
200	110/132/200	B1-B2	4	OS200B22N2P	1SCA022721R3300	1	4.2
250	145/170/250	B1-B3	3	OS250B12P	1SCA022778R9860	1	4.3
250	145/170/250	B1-B3	4	OS250B22N2P	1SCA022778R9940	1	5.1
315	180/220/315	B1-B4	3	OS315B12P	1SCA022753R2310	1	7.1
315	180/220/315	B1-B4	4	OS315B22N2P	1SCA022753R3390	1	9.1
400	230/280/400	B1-B4	3	OS400B12P	1SCA022753R3470	1	7.1
400	230/280/400	B1-B4	4	OS400B22N2P	1SCA022753R7200	1	9.1
630	355/450/630	C1-C2	3	OS630B12P	1SCA022825R6400	1	13.6
630	355/450/630	C1-C2	4	OS630B22N2P	1SCA022825R6660	1	16.9
800	450/560/710	C1-C3	3	OS800B12P	1SCA022825R8280	1	13.6
800	450/560/710	C1-C3	4	OS800B22N2P	1SCA022825R8440	1	16.9
1250A[1)]	560/710/1000	D1	3	OS1250B12P	1SCA105470R1001	1	46
1250A[1)]	560/710/1000	D1	4	OS1250B22N2P	1SCA107937R1001	1	55

N2 = Non-fused switched neutral on the right side
[1)] 1250A / AC-20...22A, 1000A / AC-23A

Shafts and handles included as standard

Suitable for switches	Included shaft	Included handle	Incl. terminal bolts
OS200_P	OXP6X210	OHB65J6	M8X25
OS250_P	OXP6X210	OHB65J6	M10X30
OS315...400_P	OXP12X250	OHB95J12	M10X30
OS630...800_P	OXP12X280	OHB145J12	M12X40
OS1250_P	OXP12X395	OHB274J12	M12X50

Ordering information
Switch fuses, BS-type

OS32G...63GB03P
A04172



OS3100G...160GB03P
A04173



Front operated switch fuses

Including terminal bolt kit in OS100G...160G, a black ON-OFF plastic handle and shaft as standard. The handle is IP65 protected, padlockable in the OFF-position and with door interlock in the ON-position. The shaft is adjustable for a range of installation depths.

Rated op. current AC-20...23A ≤ 690V [A]	Rated op. power AC-23A 400/500/690V [kW]	Fuse size	No. of poles	Type	Order number	Units/ type [pcs]	Weight/ unit [kg]
Mechanism at the end of the switch fuse							
Protected tunnel terminals, IP20							
32	15/18.5/22	A2, A3	2	OS32GB02P	1SCA116721R1001	1	1.0
32	15/18.5/22	A2, A3	3	OS32GB03P	1SCA115259R1001	1	1.3
32	15/18.5/22	A2, A3	4	OS32GB04N1P	1SCA114610R1001	1	1.6
63	30/37/55	A2, A3	2	OS63GB02P	1SCA116854R1001	1	1.0
63	30/37/55	A2, A3	3	OS63GB03P	1SCA115235R1001	1	1.3
63	30/37/55	A2, A3	4	OS63GB04N1P	1SCA115238R1001	1	1.6
Terminal bolt kit							
100	55/55/90	A2-A4[1)]	2	OS100GB02P	1SCA116723R1001	1	1.2
100	55/55/90	A2-A4[1)]	3	OS100GB03P	1SCA114613R1001	1	1.5
100	55/55/90	A2-A4[1)]	4	OS100GB04N1P	1SCA114614R1001	1	1.8
125	55/75/110	A2-A4[1)]	2	OS125GB02P	1SCA116724R1001	1	1.2
125	55/75/110	A2-A4[1)]	3	OS125GB03P	1SCA115634R1001	1	1.5
125	55/75/110	A2-A4[1)]	4	OS125GB04N1P	1SCA115901R1001	1	1.8
160	75/90/132	A2-A4[1)]	2	OS160GB02P	1SCA116725R1001	1	1.2
160	75/90/132	A2-A4[1)]	3	OS160GB03P	1SCA115413R1001	1	1.5
160	75/90/132	A2-A4[1)]	4	OS160GB04N1P	1SCA115896R1001	1	1.8

N1 = Non-fused switched neutral on the left side
[1)] Max. fuse diameter 32 mm

Shafts and handles included as standard

Suitable for switches	Included shaft	Included handle	Incl. terminal bolts
OS32G...63G_P	OXP6X161	OHB45J6	
OS100G...160G_P	OXP6X161	OHB65J6	M8X25

Ordering information
Switch fuses, BS-type

OS200...250B03P
S01622A



OS200...250B03N3P
S01622A



OS200...250B04N2P
S01623A



OS315...400B03P
S01835A



Front operated switch fuses

Including terminal bolt kit, a black ON-OFF plastic handle and shaft as standard. The handle is IP65 protected, padlockable in the OFF-position and with door interlock in the ON-position. The shaft is adjustable for a range of installation depths.

Rated op. current AC-20...23A ≤ 690V [A]	Rated op. power AC-23A 400/500/690V [kW]	Fuse size	No. of poles	Type	Order number	Units/ type [pcs]	Weight/ unit [kg]
Mechanism at the end of the switch fuse							
200	110/132/200	B1-B2	2	OS200B02P	1SCA022769R7820	1	2.4
200	110/132/200	B1-B2	3	OS200B03P	1SCA022709R9330	1	3.3
200	110/132/200	B1-B2	3+N	OS200B03N3P	1SCA022750R0620	1	3.4
200	110/132/200	B1-B2	4	OS200B04N2P	1SCA022709R9410	1	4.2
250	145/170/250	B1-B3	2	OS250B02P	1SCA022769R9440	1	3.5
250	145/170/250	B1-B3	3	OS250B03P	1SCA022750R6660	1	4.3
250	145/170/250	B1-B3	3+N	OS250B03N3P	1SCA022750R8010	1	4.4
250	145/170/250	B1-B3	4	OS250B04N2P	1SCA022750R7800	1	5.1
315	180/220/315	B1-B4	2	OS315B02P	1SCA022817R3450	1	5.4
315	180/220/315	B1-B4	3	OS315B03P	1SCA022719R0680	1	7.1
315	180/220/315	B1-B4	3+N	OS315B03N3P	1SCA022753R8940	1	7.5
315	180/220/315	B1-B4	4	OS315B04N2P	1SCA022719R2710	1	9.1
400	230/280/400	B1-B4	2	OS400B02P	1SCA022813R7220	1	5.4
400	230/280/400	B1-B4	3	OS400B03P	1SCA022719R0840	1	7.1
400	230/280/400	B1-B4	3+N	OS400B03N3P	1SCA022753R9160	1	7.5
400	230/280/400	B1-B4	4	OS400B04N2P	1SCA022719R2890	1	9.1

N2 = Non-fused switched neutral on the right side
N3 = Include a detachable neutral link integrated into the mechanism.

Shafts and handles included as standard

Suitable for switches	Included shaft	Included handle	Incl. terminal bolts
OS200_P	OXP6X210	OHB65J6	M8X25
OS250_P	OXP6X210	OHB65J6	M10X30
OS315…400_P	OXP12X250	OHB95J12	M10X30

Ordering information
Switch fuses, BS-type

OS630...800B03P
S01622A



OS1250B03P
S07075



Front operated switch fuses

Including terminal bolt kit, a black ON-OFF plastic handle and shaft as standard. The handle is IP65 protected, padlockable in the OFF-position and with door interlock in the ON-position. The shaft is adjustable for a range of installation depths.

Rated op. current AC-20...23A ≤ 690V [A]	Rated op. power AC-23A 400/500/690V [kW]	Fuse size	No. of poles	Type	Order number	Units/ type [pcs]	Weight/ unit [kg]
Mechanism at the end of the switch fuse							
630	355/450/630	C1-C2	2	OS630B02P	1SCA113529R1001	1	10.3
630	355/450/630	C1-C2	3	OS630B03P	1SCA022825R5850	1	13.6
630	355/450/630	C1-C2	3+N	OS630B03N3P	1SCA100860R1001	1	14.5
630	355/450/630	C1-C2	4	OS630B04N2P	1SCA022825R6230	1	16.9
800	450/560/710	C1-C3	2	OS800B02P	1SCA022837R6480	1	10.3
800	450/560/710	C1-C3	3	OS800B03P	1SCA022825R7550	1	13.6
800	450/560/710	C1-C3	3+N	OS800B03N3P	1SCA100861R1001	1	14.5
800	450/560/710	C1-C3	4	OS800B04N2P	1SCA022825R8010	1	16.9
1250A[1)]	560/710/1000	D1	2	OS1250B02P	1SCA114070R1001	1	37
1250A[1)]	560/710/1000	D1	3	OS1250B03P	1SCA105250R1001	1	46
1250A[1)]	560/710/1000	D1	3+N	OS1250B03N3P	1SCA107936R1001	1	47
1250A[1)]	560/710/1000	D1	4	OS1250B04N2P	1SCA105469R1001	1	55

N2 = Non-fused switched neutral on the right side
N3 = Include a detachable neutral link integrated into the mechanism.
[1)] 1250A / AC-20...22A, 1000A / AC-23A

Shafts and handles included as standard

Suitable for switches	Included shaft	Included handle	Incl. terminal bolts
OS630...800_P	OXP12X280	OHB145J12	M12X40
OS1250_P	OXP12X395	OHB274J12	M12X50

Ordering information
Switch fuses, BS-type

OS32G...63GB03K
S07002



OS100G...160GB03K
S07003



Front operated switch fuses with direct mounted handle

Including terminal bolt kit in OS100G...160G, a black Test-OFF-ON plastic handle and shaft as standard. The handle is padlockable in the OFF-position.

Rated op. current AC-20...23A ≤ 690V [A]	Rated op. power AC-23A 400/500/690V [kW]	Fuse size	No. of poles	Type	Order number	Units/ type [pcs]	Weight/ unit [kg]
Mechanism at the end of the switch fuse							
Protected tunnel terminals, IP20							
32	15/18.5/22	A2, A3	3	OS32GB03K	1SCA116744R1001	1	1.3
32	15/18.5/22	A2, A3	4	OS32GB04N1K	1SCA116856R1001	1	1.6
63	30/37/55	A2, A3	3	OS63GB03K	1SCA116745R1001	1	1.3
63	30/37/55	A2, A3	4	OS63GB04N1K	1SCA116746R1001	1	1.6
Terminal bolt kit							
100	55/55/90	A2-A4[1)]	3	OS100GB03K	1SCA116747R1001	1	1.5
100	55/55/90	A2-A4[1)]	4	OS100GB04N1K	1SCA116748R1001	1	1.8
125	55/75/110	A2-A4[1)]	3	OS125GB03K	1SCA116751R1001	1	1.5
125	55/75/110	A2-A4[1)]	4	OS125GB04N1K	1SCA116752R1001	1	1.8
160	75/90/132	A2-A4[1)]	3	OS160GB03K	1SCA116753R1001	1	1.5
160	75/90/132	A2-A4[1)]	4	OS160GB04N1K	1SCA116754R1001	1	1.8

N1 = Non-fused switched neutral on the left side
[1)] Max. fuse diameter 32 mm

Shafts and handles included as standard

Suitable for switches	Included shaft	Included handle	Incl. terminal bolts
OS32G...63G_K		OSV200BK	
OS100G...160G_K		OSV200BK	M8X25

Ordering information
Switch fuses, BS-type

OS200...250B03K
S02013A

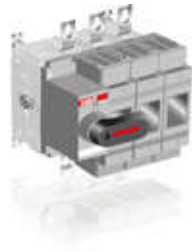

Front operated switch fuses with direct mounted handle

Including terminal bolt kit, a black Test-OFF-ON plastic handle and shaft as standard. The handle is padlockable in the OFF-position.

Rated op. current AC-20...23A ≤ 690V [A]	Rated op. power AC-23A 400/500/690V [kW]	Fuse size	No. of poles	Type	Order number	Units/ type [pcs]	Weight/ unit [kg]
Mechanism at the end of the switch fuse							
Terminal bolt kit							
200	110/132/200	B1-B2	3	OS200B03K	1SCA022763R6950	1	3.3
200	110/132/200	B1-B2	4	OS200B04N2K	1SCA022763R7090	1	4.2
250	145/170/250	B1-B3	3	OS250B03K	1SCA022763R6010	1	4.3
250	145/170/250	B1-B3	4	OS250B04N2K	1SCA022763R6280	1	5.1
315	180/220/315	B1-B4	3	OS315B03K	1SCA022763R6520	1	7.0
315	180/220/315	B1-B4	4	OS315B04N2K	1SCA022763R6610	1	9.0
400	230/280/400	B1-B4	3	OS400B03K	1SCA022763R6790	1	7.0
400	230/280/400	B1-B4	4	OS400B04N2K	1SCA022763R6870	1	9.0
630	355/450/630	C1-C2	3	OS630B03K	1SCA108708R1001	1	13
630	355/450/630	C1-C2	4	OS630B04N2K	1SCA108710R1001	1	16
800	450/560/710	C1-C3	3	OS800B03K	1SCA108713R1001	1	13
800	450/560/710	C1-C3	4	OS800B04N2K	1SCA108714R1001	1	16
1250A[1)]	560/710/1000	D1	3	OS1250B03K	1SCA108715R1001	1	45
1250A[1)]	560/710/1000	D1	4	OS1250B04N2K	1SCA108717R1001	1	54

N2 = Non-fused switched neutral on the right side
[1)] 1250A / AC-20…22A, 1000A / AC-23A

Shafts and handles included as standard

Suitable for switches	Included shaft	Included handle	Incl. terminal bolts
OS200_K		OSV200BK	M8X25
OS250_K		OSV250DK	M10X30
OS315…400_K		OSV400BK	M10X30
OS630...800_K		OSV800DK	M12X40
OS1250_K		OSV1250DK	M12x50

Ordering information
Switch fuses, BS-type

(OS Mini)
OS20...3FBS30A1
OS32FBS30A2
OS32FBS30F1
S01146A



OS32G...63GBS30K
S07009



OS100G...160GBS30K
S07010



Side operated switch fuses with pistol handle

Including a black ON-OFF plastic handle and shaft as standard. The handle is IP65 protected, padlockable in the OFF-position and with door interlock in the ON-position. The shaft is adjustable for a range of installation depths.

Rated op. current AC-20...23A ≤ 690V [A]	Rated op. power AC-23A 400/500/690V [kW]	Fuse size	No. of poles	Type	Order number	Units/ type [pcs]	Weight/ unit [kg]
Protected tunnel terminals, IP20.							
20	7.5/11/15	A1	3	OS20FBS30A1	1SCA108997R1001	1	0.7
20	7.5/11/15	A1	4	OS20FBS40A1N1	1SCA108998R1001	1	0.9
32	15/18.5/22	A1	3	OS32FBS30A1	1SCA108877R1001	1	0.7
32	15/18.5/22	A1	4	OS32FBS40A1N1	1SCA109006R1001	1	0.9
32	15/18.5/22	A2	3	OS32FBS30A2	1SCA108882R1001	1	0.7
32	15/18.5/22	A2	4	OS32FBS40A2N1	1SCA109007R1001	1	0.9
32	15/18.5/22	F1	3	OS32FBS30F1	1SCA109004R1001	1	0.7
32	15/18.5/22	F1	4	OS32FBS40F1N1	1SCA109005R1001	1	0.9

N1 = Non-fused switched neutral on the left side
Shaft mounting depths measured from the left side of the switch, 3-pole:H=154…166 mm and 4-pole: H= 189…201 mm.

Side operated switch fuses with direct mounted handle

Including terminal bolt kit (OS125G...160G), a black Test-ON-OFF plastic handle and shaft as standard. The handle is padlockable in the OFF-position.

Rated op. current AC-20...23A ≤ 690V [A]	Rated op. power AC-23A 400/500/690V [kW]	Fuse size	No. of poles	Type	Order number	Units/ type [pcs]	Weight/ unit [kg]
Protected tunnel terminals, IP20.							
32	15/18.5/22	A2, A3	3	OS32GBS30K	1SCA115918R1001	1	1.3
32	15/18.5/22	A2, A3	4	OS32GBS40N1K	1SCA115923R1001	1	1.6
63	30/37/55	A2, A3	3	OS63GBS30K	1SCA115924R1001	1	1.3
63	30/37/55	A2, A3	4	OS63GBS40N1K	1SCA115979R1001	1	1.6
Terminal bolt kit							
125	55/75/110	A2-A4[3)]	3	OS125GBS30K	1SCA116400R1001	1	1.5
125	55/75/110	A2-A4[3)]	4	OS125GBS40N1K	1SCA115926R1001	1	1.8
160	75/90/132	A2-A4[3)]	3	OS160GBS30K	1SCA115927R1001	1	1.5
160	75/90/132	A2-A4[3)]	4	OS160GBS40N1K	1SCA115928R1001	1	1.8

N1 = Non-fused switched neutral on the left side
[1)] Max. diameter 32 mm

Shafts and handles included as standard

Suitable for switches	Included shaft	Included handle	Incl. terminal bolts
OS20F...32F_ (OS Mini)	OXP6X70-V0	OHB65J6	
OS32G...63G_K	OXP6X42-TO	OHB65D6	
OS125G...160G_K	OXP6X42-TO	OHB65D6	M8X25

Ordering information
Switch fuses, BS-type

OS200...250BS03K
KE00075



Side operated switch fuses with direct mounted handle

Including terminal bolt kit, a black Test-ON-OFF plastic handle and shaft as standard. The handle is padlockable in the OFF-position.

Rated op. current AC-20...23A ≤ 690V [A]	Rated op. power AC-23A 400/500/690V [kW]	Fuse size	No. of poles	Type	Order number	Units/ type [pcs]	Weight/ unit [kg]
200	110/132/200	B1-B2	3	OS200BS03K	1SCA022860R3990	1	3.6
200	110/132/200	B1-B2	3	OS200BS30K	1SCA022870R7850	1	3.6
200	110/132/200	B1-B2	4	OS200BS04N2K	1SCA022870R7690	1	4.5
200	110/132/200	B1-B2	4	OS200BS40N2K	1SCA022870R8230	1	4.5
250	145/170/250	B1-B3	3	OS250BS03K	1SCA022860R4450	1	4.6
250	145/170/250	B1-B3	3	OS250BS30K	1SCA022870R8660	1	4.6
250	145/170/250	B1-B3	4	OS250BS04N2K	1SCA022870R8400	1	5.4
250	145/170/250	B1-B3	4	OS250BS40N2K	1SCA022870R9040	1	5.4
315	180/220/315	B1-B4	3	OS315BS03K	1SCA022860R4880	1	7.5
315	180/220/315	B1-B4	3	OS315BS30K	1SCA022870R9470	1	7.5
315	180/220/315	B1-B4	4	OS315BS04N2K	1SCA022870R9210	1	9.5
315	180/220/315	B1-B4	4	OS315BS40N2K	1SCA022870R9800	1	9.5
400	230/280/400	B1-B4	3	OS400BS03K	1SCA022860R5260	1	7.5
400	230/280/400	B1-B4	3	OS400BS30K	1SCA022871R0210	1	7.5
400	230/280/400	B1-B4	4	OS400BS04N2K	1SCA022871R0050	1	9.5
400	230/280/400	B1-B4	4	OS400BS40N2K	1SCA022871R0640	1	9.5
630	355/450/630	C1-C2	3	OS630BS03K	1SCA108142R1001	1	14.1
630	355/450/630	C1-C2	3	OS630BS30K	1SCA108148R1001	1	14.1
630	355/450/630	C1-C2	4	OS630BS04N2K	1SCA108146R1001	1	17
630	355/450/630	C1-C2	4	OS630BS40N2K	1SCA108151R1001	1	17
800	450/560/710	C1-C3	3	OS800BS03K	1SCA108077R1001	1	14.1
800	450/560/710	C1-C3	3	OS800BS30K	1SCA108084R1001	1	14.1
800	450/560/710	C1-C3	4	OS800BS04N2K	1SCA108082R1001	1	17
800	450/560/710	C1-C3	4	OS800BS40N2K	1SCA108087R1001	1	17

N2 = Non-fused switched neutral on the right side

Shafts and handles included as standard

Suitable for switches	Included shaft	Included handle	Incl. terminal bolts
OS200_K	OXP6X42-TO	OHB65D6	M8x25
OS250_K	OXP6X42-TO	OHB65D6	M10x30
OS315...400_K	OXP12X47-TO	OHB95D12	M10x30
OS630...800_K	OXP12X59-TO	OHB145D12	M12x40

Ordering information
Switch fuses, BS-type

OS32G...63GBS30
S07169



OS100G...160GBS30
S07170



Side operated switch fuses without handle

Including terminal bolt kit in types OS100G...160G as standard. The handle and shaft have to be ordered separately.

Rated op. current AC-20...23A ≤ 690V [A]	Rated op. power AC-23A 400/500/690V [kW]	Fuse size	No. of poles	Type	Order number	Units/ type [pcs]	Weight/ unit [kg]
Protected tunnel terminals, IP20.							
32	15/18.5/22	A2, A3	3	OS32GBS30	1SCA115955R1001	1	1.3
32	15/18.5/22	A2, A3	4	OS32GBS40N1	1SCA115956R1001	1	1.6
63	30/37/55	A2, A3	3	OS63GBS30	1SCA115957R1001	1	1.3
63	30/37/55	A2, A3	4	OS63GBS40N1	1SCA115978R1001	1	1.6
Terminal bolt kit							
100	55/55/90	A2-A4[1)]	3	OS100GBS30	1SCA116758R1001	1	1.5
100	55/55/90	A2-A4[1)]	4	OS100GBS40N1	1SCA116759R1001	1	1.8
100	55/55/90	A2-A4[1)]	4	OS100GBS40N2	1SCA116760R1001	1	1.8
125	55/75/110	A2-A4[1)]	3	OS125GBS30	1SCA116048R1001		1.5
125	55/75/110	A2-A4[1)]	4	OS125GBS40N1	1SCA115959R1001	1	1.8
125	55/75/110	A2-A4[1)]	4	OS125GBS40N2	1SCA116761R1001	1	1.8
160	75/90/132	A2-A4[1)]	3	OS160GBS30	1SCA115960R1001	1	1.5
160	75/90/132	A2-A4[1)]	4	OS160GBS40N1	1SCA115961R1001	1	1.8
160	75/90/132	A2-A4[1)]	4	OS160GBS40N2	1SCA116762R1001	1	1.8

N1 = Non-fused switched neutral on the left side
N2 = Non-fused switched neutral on the right side
[1)] Max. diameter 32 mm

Terminal bolt kits included as standard

Suitable for switches	Included shaft	Included handle	Incl. terminal bolts
OS125G...160G_			M8X25

Ordering information
Switch fuses, BS-type

OS200...250BS03
KE00074



Side operated switch fuses without handle

Including terminal bolt kit as standard. The handle and shaft have to be ordered separately.

Rated op. current AC-20...23A ≤ 690V [A]	Rated op. power AC-23A 400/500/690V [kW]	Fuse size	No. of poles	Type	Order number	Units/ type [pcs]	Weight/ unit [kg]
200	110/132/200	B1-B2	3	OS200BS03	1SCA022860R3810	1	3.5
200	110/132/200	B1-B2	3	OS200BS30	1SCA022870R7770	1	3.5
200	110/132/200	B1-B2	4	OS200BS04N2	1SCA022870R7510	1	4.4
200	110/132/200	B1-B2	4	OS200BS40N2	1SCA022870R8150	1	4.4
250	145/170/250	B1-B3	3	OS250BS03	1SCA022860R4370	1	4.5
250	145/170/250	B1-B3	3	OS250BS30	1SCA022870R8580	1	4.5
250	145/170/250	B1-B3	4	OS250BS04N2	1SCA022870R8310	1	5.3
250	145/170/250	B1-B3	4	OS250BS40N2	1SCA022870R8910	1	5.3
315	180/220/315	B1-B4	3	OS315BS03	1SCA022860R4700	1	7.3
315	180/220/315	B1-B4	3	OS315BS30	1SCA022870R9390	1	7.3
315	180/220/315	B1-B4	4	OS315BS04N2	1SCA022870R9120	1	9.3
315	180/220/315	B1-B4	4	OS315BS40N2	1SCA022870R9710	1	9.3
400	230/280/400	B1-B4	3	OS400BS03	1SCA022860R5180	1	7.3
400	230/280/400	B1-B4	3	OS400BS30	1SCA022871R0130	1	7.3
400	230/280/400	B1-B4	4	OS400BS04N2	1SCA022870R9980	1	9.3
400	230/280/400	B1-B4	4	OS400BS40N2	1SCA022871R0560	1	9.3
630	355/450/630	C1-C2	3	OS630BS03	1SCA108141R1001	1	13.9
630	355/450/630	C1-C2	3	OS630BS30	1SCA108147R1001	1	13.9
630	355/450/630	C1-C2	4	OS630BS04N2	1SCA108145R1001	1	16.8
630	355/450/630	C1-C2	4	OS630BS40N2	1SCA108152R1001	1	16.8
800	450/560/710	C1-C3	3	OS800BS03	1SCA108076R1001	1	13.9
800	450/560/710	C1-C3	3	OS800BS30	1SCA108083R1001	1	13.9
800	450/560/710	C1-C3	4	OS800BS04N2	1SCA108081R1001	1	16.8
800	450/560/710	C1-C3	4	OS800BS40N2	1SCA108086R1001	1	16.8

N2 = Non-fused switched neutral on the right side

Terminal bolt kits included as standard

Suitable for switches	Included shaft	Included handle	Incl. terminal bolts
OS200			M8x25
OS250			M10x30
OS315...400			M10x30
OS630...800			M12x40

Ordering information
Switch fuses, BS-type

OS200...250B22BBN2P
S07177



Special connected switch fuses, back in, back out connection (BB)

Including terminal bolt kit, a black ON-OFF plastic handle and shaft as standard. The handle is IP65 protected, padlockable in the OFF-position and with door interlock in the ON-position. The shaft is adjustable for a range of installation depths.

Rated op. current AC-20...23A ≤ 690V [A]	Rated op. power AC-23A 415/500/690V [kW]	Fuse size*)	No. of poles	Type	Order number	Units/ type [pcs]	Weight/ unit [kg]
Mechanism between the poles							
125	55/75/110	A2…A4[1)]	3	OS125GB12BBP	1SCA120799R1001	1	2.3
160	75/90/132	A2…A4[1)]	3	OS160GB12BBP	1SCA120726R1001	1	2.3
200	110/140/180	B1…B2[2)]	3	OS200B12BBP	1SCA102124R1001	1	3.3
200	110/140/180	B1…B2[2)]	4	OS200B22BBN2P	1SCA102130R1001	1	4.2
250	140/170/240	B1…B3[2)]	3	OS250B12BBP	1SCA102178R1001	1	4.3
250	140/170/240	B1…B3[2)]	4	OS250B22BBN2P	1SCA102188R1001	1	5.1
315	180/220/295	B1…B4[3)]	3	OS315B12BBP	1SCA102234R1001	1	7.1
315	180/220/295	B1…B4[3)]	4	OS315B22BBN2P	1SCA102247R1001	1	9.1
400	230/280/355	B1…B4[3)]	3	OS400B12BBP	1SCA102254R1001	1	7.1
400	230/280/355	B1…B4[3)]	4	OS400B22BBN2P	1SCA102263R1001	1	9.1

*) Fuse standards BS 88-2
1) Max fuse body dia 32 mm
2) Max fuse body dia 52 mm
3) Max fuse body dia 62 mm

Shafts and handles included as standard

Suitable for switches	Included shaft	Included handle	Incl. terminal bolts
OS125G...160G_P	OXP6X161	OHB65J6	M8x25
OS200_P	OXP6X210	OHB65J6	M8x25
OS250_P	OXP6X210	OHB65J6	M10x30
OS315...400_P	OXP12X250	OHB95J12	M10x30

Ordering information
Switch fuses, BS-type

OS200...250B03BBP
S07175



OS315...400B03BBP
S07176



Special connected switch fuses, back in, back out connection (BB)

Including terminal bolt kit, a black ON-OFF plastic handle and shaft as standard. The handle is IP65 protected, padlockable in the OFF-position and with door interlock in the ON-position. The shaft is adjustable for a range of installation depths.

Rated op. current AC-20...23A ≤ 690V [A]	Rated op. power AC-23A 415/500/690V [kW]	Fuse size*)	No. of poles	Type	Order number	Units/ type [pcs]	Weight/ unit [kg]
Mechanism at the end of the switch fuse							
125	55/75/110	A2…A4[1)]	3	OS125GB03BBP	1SCA120783R1001	1	2.3
125	55/75/110	A2…A4[1)]	4	OS125GB04BBN1P	1SCA122597R1001	1	2.7
160	75/90/132	A2…A4[1)]	3	OS160GB03BBP	1SCA120657R1001	1	2.3
160	75/90/132	A2…A4[1)]	4	OS160GB04BBN1P	1SCA122598R1001	1	2.7
200	110/140/180	B1…B2[2)]	3	OS200B03BBP	1SCA102082R1001	1	3.3
200	110/140/180	B1…B2[2)]	4	OS200B04BBN2P	1SCA102123R1001	1	4.2
250	140/170/240	B1…B3[2)]	3	OS250B03BBP	1SCA102168R1001	1	4.3
250	140/170/240	B1…B3[2)]	4	OS250B04BBN2P	1SCA102164R1001	1	5.1
315	180/220/295	B1…B4[3)]	3	OS315B03BBP	1SCA102222R1001	1	7.1
315	180/220/295	B1…B4[3)]	4	OS315B04BBN2P	1SCA102225R1001	1	9.1
400	230/280/355	B1…B4[3)]	3	OS400B03BBP	1SCA102252R1001	1	7.1
400	230/280/355	B1…B4[3)]	4	OS400B04BBN2P	1SCA102248R1001	1	9.1

*) Fuse standards BS 88-2
1) Max fuse body dia 32 mm
2) Max fuse body dia 52 mm
3) Max fuse body dia 62 mm

Shafts and handles included as standard

Suitable for switches	Included shaft	Included handle	Incl. terminal bolts
OS125G...160G_P	OXP6X161	OHB65J6	M8x25
OS200_P	OXP6X210	OHB65J6	M8x25
OS250_P	OXP6X210	OHB65J6	M10x30
OS315...400_P	OXP12X250	OHB95J12	M10x30

Ordering information
Switch fuses, BS-type

OS125G...160GB12LRP
S07174



OS200...250B12LRP
S07172



OS315...400B12LRP
S07173

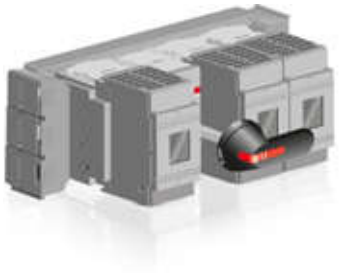

Special connected switch fuses, left in, right out connection (LR)

Including terminal bolt kit, a black ON-OFF plastic handle and shaft as standard. The handle is IP65 protected, padlockable in the OFF-position and with door interlock in the ON-position. The shaft is adjustable for a range of installation depths. Terminal angles for side terminals are accessories and are not included in standard delivery.

Rated op. current AC-20...23A ≤ 690V [A]	Rated op. power AC-23A 415/500/690V [kW]	Fuse size*)	No. of poles	Type	Order number	Units/ type [pcs]	Weight/ unit [kg]
Mechanism between the poles							
125	55/75/110	A2...A4[1)]	3	OS125GB12LRP	1SCA120258R1001	1	2.9
125	55/75/110	A2...A4[1)]	3	OS125GB21LRP	1SCA120261R1001	1	2.9
125	55/75/110	A2...A4[1)]	4	OS125GB22LRP	1SCA120265R1001	1	3.7
160	75/90/132	A2...A4[1)]	3	OS160GB12LRP	1SCA120271R1001	1	2.9
160	75/90/132	A2...A4[1)]	3	OS160GB21LRP	1SCA120273R1001	1	2.9
160	75/90/132	A2...A4[1)]	4	OS160GB22LRP	1SCA120277R1001	1	3.7
200	110/140/180	B1...B2[2)]	3	OS200B12LRP	1SCA022854R2910	1	6.2
200	110/140/180	B1...B2[2)]	3	OS200B21LRP	1SCA022854R3050	1	6.2
200	110/140/180	B1...B2[2)]	4	OS200B22LRP	1SCA022854R4290	1	9.1
250	140/170/240	B1...B3[2)]	3	OS250B12LRP	1SCA022854R5690	1	6.2
250	140/170/240	B1...B3[2)]	3	OS250B21LRP	1SCA022854R5850	1	6.2
250	140/170/240	B1...B3[2)]	4	OS250B22LRP	1SCA022854R7210	1	9.1
315	180/220/295	B1...B4[3)]	3	OS315B12LRP	1SCA022854R8790	1	9.6
315	180/220/295	B1...B4[3)]	3	OS315B21LRP	1SCA022854R8870	1	9.6
315	180/220/295	B1...B4[3)]	4	OS315B22LRP	1SCA022855R0000	1	12.8
400	230/280/355	B1...B4[3)]	3	OS400B12LRP	1SCA022855R1400	1	9.6
400	230/280/355	B1...B4[3)]	3	OS400B21LRP	1SCA022855R1580	1	9.6
400	230/280/355	B1...B4[3)]	4	OS400B22LRP	1SCA022855R2710	1	12.8

*) Fuse standards BS 88-2
1) Max fuse body dia 32 mm
2) Max fuse body dia 52 mm
3) Max fuse body dia 62 mm

Shafts and handles included as standard

Suitable for switches	Included shaft	Included handle	Incl. terminal bolts
OS125G...160G_P	OXP6X161	OHB65J6	M8x25
OS200...250_P	OXP6X210	OHB65J6	M8x16
OS315...400_P	OXP12X250	OHB95J12	M8x16

Ordering information
Switch fuses, NFC-type

(OS Mini)
OS25...32FF12_
S01133A



OS50GF12P
S07000



OS125GF12P
S07001



OS50GF03P
A04172



OS125GF03P
A04173



Front operated switch fuses

Including terminal bolt kit in OS125G, a black ON-OFF plastic handle and shaft as standard. The handle is IP65 protected, padlockable in the OFF-position and with door interlock in the ON-position. The shaft is adjustable for a range of installation depths.

Rated op. current AC-20...23A ≤ 690V [A]	Rated op. power AC-23A 415/500/690V [kW]	Fuse size	No. of poles	Type	Order number	Units/ type [pcs]	Weight/ unit [kg]
Mechanism between the poles							
Protected tunnel terminals, IP20.							
25	11/15/22	10x38	3	OS25FF1210	1SCA108636R1001	1	0.7
25	11/15/22	10x38	4	OS25FF2210N1	1SCA108638R1001	1	0.9
25	11/15/22	10x38	4	OS25FF2210F	1SCA108637R1001	1	0.9
32	15/18.5/22	14x51	3	OS32FF1214	1SCA108642R1001	1	0.7
32	15/18.5/22	14x51	4	OS32FF2214N1	1SCA108645R1001	1	0.9
32	15/18.5/22	14x51	4	OS32FF2214F	1SCA108643R1001	1	0.9
50	22/30/37	14x51	2	OS50GF11P	1SCA116870R1001	1	1.0
50	22/30/37	14x51	3	OS50GF12P	1SCA115553R1001	1	1.3
50	22/30/37	14x51	4	OS50GF22N1P	1SCA114622R1001	1	1.6
50	22/30/37	14x51	4	OS50GF22FP	1SCA114623R1001	1	1.6
Terminal bolt kit							
125	55/75/110	22x58	2	OS125GF11P	1SCA116726R1001	1	1.2
125	55/75/110	22x58	3	OS125GF12P	1SCA114624R1001	1	1.5
125	55/75/110	22x58	4	OS125GF22N1P	1SCA115893R1001	1	1.8
125	55/75/110	22x58	4	OS125GF22FP	1SCA115614R1001	1	1.8
Mechanism at the end of the switch fuse							
Protected tunnel terminals, IP20							
50	22/30/37	14x51	2	OS50GF02P	1SCA118345R1001	1	1.0
50	22/30/37	14x51	3	OS50GF03P	1SCA115492R1001	1	1.3
50	22/30/37	14x51	4	OS50GF04N1P	1SCA115495R1001	1	1.6
50	22/30/37	14x51	4	OS50GF04FP	1SCA115498R1001	1	1.6
Terminal bolt kit							
125	55/75/110	22x58	2	OS125GF02P	1SCA116727R1001	1	1.2
125	55/75/110	22x58	3	OS125GF03P	1SCA115602R1001	1	1.5
125	55/75/110	22x58	4	OS125GF04N1P	1SCA115888R1001	1	1.8
125	55/75/110	22x58	4	OS125GF04FP	1SCA115606R1001	1	1.8

F = Fused switched neutral
N1 = Non-fused switched neutral on the left side

Shafts and handles included as standard

Suitable for switches	Included shaft	Included handle	Incl. terminal bolts
OS25FF...32FF_ (OS Mini)	OXP6X150	OHB65J6	
OS50G_P	OXP6X161	OHB45J6	
OS125G_P	OXP6X161	OHB65J6	M8X25

Ordering information
Switch fuses, NFC-type

(OS Mini)
OS25...32FFS30_
S01146A



OS50GFS30K
S07009



OS125GFS30K
S07010



Side operated switch fuses with pistol handle

Including a black ON-OFF plastic handle and shaft as standard. The handle is IP65 protected, Nema type 1, 3R, 12, padlockable in the OFF-position and with door interlock in the ON-position. The shaft is adjustable for a range of installation depths.

Rated op. current AC-20...23A ≤ 690V [A]	Rated op. power AC-23A 415/500/690V [kW]	Fuse size	No. of poles	Type	Order number	Units/ type [pcs]	Weight/ unit [kg]
Shaft mounting depths measured from the left side of the switch, 3-pole: H=154…166 mm and 4 pole: H=189…201 mm. Protected tunnel terminals, IP20.							
25	11/15/22	10x38	3	OS25FFS3010	1SCA108639R1001	1	0.7
25	11/15/22	10x38	4	OS25FFS4010N1	1SCA108661R1001	1	0.9
25	11/15/22	10x38	4	OS25FFS4010F	1SCA108640R1001	1	0.9
32	15/18.5/22	14x51	3	OS32FFS3014	1SCA108646R1001	1	0.7
32	15/18.5/22	14x51	4	OS32FFS4014N1	1SCA108649R1001	1	0.9
32	15/18.5/22	14x51	4	OS32FFS4014F	1SCA108647R1001	1	0.9

F = Fused switched neutral
N1 = Non-fused switched neutral on the left side

Side operated switch fuses with direct mounted handle

Including terminal bolt kit (OS125G), a black Test-ON-OFF plastic handle and shaft as standard. The handle is padlockable in the OFF-position.

Rated op. current AC-20...23A ≤ 690V [A]	Rated op. power AC-23A 415/500/690V [kW]	Fuse size	No. of poles	Type	Order number	Units/ type [pcs]	Weight/ unit [kg]
Protected tunnel terminals, IP20.							
50	22/30/37	14x51	3	OS50GFS30K	1SCA116404R1001	1	1.3
50	22/30/37	14x51	4	OS50GFS40N1K	1SCA116013R1001	1	1.6
50	22/30/37	14x51	4	OS50GFS40FK	1SCA116425R1001	1	1.6
Terminal bolt kit							
125	55/75/110	22x58	3	OS125GFS30K	1SCA115944R1001	1	1.5
125	55/75/110	22x58	4	OS125GFS40N1K	1SCA115945R1001	1	1.8
125	55/75/110	22x58	4	OS125GFS40FK	1SCA115946R1001	1	1.8

F = Fused switched neutral
N1 = Non-fused switched neutral on the left side

Shafts and handles included as standard

Suitable for switches	Included shaft	Included handle	Incl. terminal bolts
OS25F...32F (OS Mini)	OXP6X70-V0	OHB65J6	
OS50G_K	OXP6X42-TO	OHB65D6	
OS125G_K	OXP6X42-TO	OHB65D6	M8X25

Ordering information
Switch fuses, NFC-type

OS50GFS30
S07169



OS125GFS30
S07170



Side operated switch fuses without handle

Including terminal bolt kit (OS125G) as standard.

Rated op. current AC-20...23A ≤ 690V [A]	Rated op. power AC-23A 415/500/690V [kW]	Fuse size	No. of poles	Type	Order number	Units/ type [pcs]	Weight/ unit [kg]
Protected tunnel terminals, IP20.							
50	22/30/37	14x51	3	OS50GFS30	1SCA116050R1001	1	1.3
50	22/30/37	14x51	4	OS50GFS40N1	1SCA116058R1001	1	1.6
50	22/30/37	14x51	4	OS50GFS40F	1SCA116014R1001	1	1.6
Terminal bolt kit							
125	55/75/110	22x58	3	OS125GFS30	1SCA115973R1001	1	1.5
125	55/75/110	22x58	4	OS125GFS40N1	1SCA115974R1001	1	1.8
125	55/75/110	22x58	4	OS125GFS40F	1SCA115975R1001	1	1.8

F = Fused switched neutral
N1 = Non-fused switched neutral on the left side

Terminal bolt kits included as standard

Suitable for switches	Included shaft	Included handle	Incl. terminal bolts
OS125G_			M8X25

Ordering information
Switch fuses, Neozed-type

(OS Mini)
OS16...35FD12_
S01133A



(OS Mini)
OS16...35FDS30_
S01146A



Front operated switch fuses

Including a black ON-OFF plastic handle and shaft as standard. The handle is IP65 protected, padlockable in the OFF-position and with door interlock in the ON-position. The shaft is adjustable for a range of installation depths.

Rated op. current AC-20...23A ≤ 690V [A]	Rated op. power AC-23A 415/500/690V [kW]	Fuse size	No. of poles	Type	Order number	Units/ type [pcs]	Weight/ unit [kg]
Mechanism between the poles							
Protected tunnel terminals, IP20.							
16	7.5/7.5/11	DO1[1)]	3	OS16FD1201	1SCA108788R1001	1	0.7
16	7.5/7.5/11	DO1[1)]	4	OS16FD2201N1	1SCA108789R1001	1	0.9
16	7.5/7.5/11	DO1[1)]	4	OS16FD2201F	1SCA108993R1001	1	0.9
35	15/22/30	DO2[1)]	3	OS35FD1202	1SCA108908R1001	1	0.7
35	15/22/30	DO2[1)]	4	OS35FD2202N1	1SCA108911R1001	1	0.9
35	15/22/30	DO2[1)]	4	OS35FD2202F	1SCA109008R1001	1	0.9

F = Fused switched neutral
N1 = Non-fused switched neutral on the left side
[1)] Use DO2 adapter rings.

Side operated switch fuses with pistol handle

Including a handle and shaft as standard. The handle is IP65 protected, padlockable in the OFF-position and with door interlock in the ON-position. The shaft is adjustable for a range of installation depths.

Rated op. current AC-20...23A ≤ 690V [A]	Rated op. power AC-23A 415/500/690V [kW]	Fuse size	No. of poles	Type	Order number	Units/ type [pcs]	Weight/ unit [kg]
Shaft mounting depths measured from the left side of the switch, 3-pole: H=154…166 mm and 4-pole: H=189…201 mm. Protected tunnel terminals, IP20.							
16	7.5/7.5/11	DO 1[1)]	3	OS16FDS3001	1SCA108994R1001	1	0.7
16	7.5/7.5/11	DO 1[1)]	4	OS16FDS4001N1	1SCA108995R1001	1	0.9
16	7.5/7.5/11	DO 1[1)]	4	OS16FDS4001F	1SCA108996R1001	1	0.9
35	15/22/30	DO 2	3	OS35FDS3002	1SCA109009R1001	1	0.7
35	15/22/30	DO 2	4	OS35FDS4002N1	1SCA109010R1001	1	0.9
35	15/22/30	DO 2	4	OS35FDS4002F	1SCA109011R1001	1	0.9

F = Fused switched neutral
N1 = Non-fused switched neutral on the left side
[1)] Use Neozed DO2 adaptor ring

Shafts and handles included as standard

Suitable for switches	Included shaft	Included handle	Incl. terminal bolts
OS16…35FD_ (OS Mini)	OXP6X150	OHB65J6	
OS16...35FDS_ (OS Mini)	OXP6X70-V0	OHB65J6	

Ordering information
Switch fuses, UL- and CSA-types

(OS Mini)
OS30FA_
S01133A



OS60GJ12P
S07000



OS100GJ12P
S07013



OS60GJ03P
A04172



OS100GJ03P
S07011



Front operated fusible disconnect switches

Including terminal bolt set (OS100G), a black ON-OFF plastic handle and shaft as standard. The handle is IP65, NEMA 1, 3R, 12 protected, padlockable in the OFF-position and with door interlock in the ON-position. The shaft is adjustable for a range of installation depths. Fuse standard UL 248.

Ampere rating [A]	Horsepower rating 240/480/600V [HP]	Fuse size	No. of poles	Type	Order number	Units/ type [pcs]	Weight/ unit [kg]
Mechanism between the poles							
Protected tunnel terminals, IP20, cable size 0.5…10 mm², (AWG 18 - 8).							
30	7.5/15/20	CC, 30A	3	OS30FACC12P	1SCA108817R1001	1	0.7
30	7.5/15/20	CC, 30A	4	OS30FACC22FP	1SCA108821R1001	1	0.9
30	7.5/15/20	J, 30A	3	OS30FAJ12P	1SCA108828R1001	1	0.7
30	7.5/15/20	J, 30A	4	OS30FAJ22FP	1SCA108831R1001	1	0.9
Protected tunnel terminals, IP20, cable size 2.5…25 mm² (AWG 14 - 4).							
60	15/30/50	J, 60A	3	OS60GJ12P	1SCA115449R1001	1	1.3
60	15/30/50	J, 60A	4	OS60GJ22N1P	1SCA116735R1001	1	1.6
60	15/30/50	J, 60A	4	OS60GJ22FP	1SCA115469R1001	1	1.6
Terminal bolt kit							
100	30/60/75	J, 100A	3	OS100GJ12P	1SCA115666R1001	1	1.5
100	30/60/75	J, 100A	4	OS100GJ22N1P	1SCA115910R1001	1	1.8
100	30/60/75	J, 100A	4	OS100GJ22FP	1SCA114636R1001	1	1.8
Mechanism at the end of the switch fuse							
Protected tunnel terminals, IP20, cable size 2.5…25 mm² (AWG 14 - 4).							
60	15/30/50	J, 60A	3	OS60GJ03P	1SCA115443R1001	1	1.3
60	15/30/50	J, 60A	4	OS60GJ04N1P	1SCA116736R1001	1	1.6
60	15/30/50	J, 60A	4	OS60GJ04FP	1SCA115446R1001	1	1.6
Terminal bolt kit							
100	30/60/75	J, 100A	3	OS100GJ03P	1SCA114639R1001	1	1.5
100	30/60/75	J, 100A	4	OS100GJ04N1P	1SCA115909R1001	1	1.8
100	30/60/75	J, 100A	4	OS100GJ04FP	1SCA115439R1001	1	1.8

F = Fused switched neutral
N1 = Non-fused switched neutral on the left side

Shafts and handles included as standard

Suitable for switches	Included shaft	Included handle	Incl. terminal bolts
OS30FA_P (OS Mini)	OXP6X150	OHB65J6	
OS60G_P	OXP6X161	OHB45J6	
OS100G_P	OXP6X161	OHB65J6	M8X25

Ordering information
Switch fuses, UL- and CSA-types

OS200J03P
S02160A



OS400J03P
S01835A



OS600..800J/L03P
KE00036



OS1200L03P
S07077



Front operated fusible disconnect switches

Including terminal bolt kit, a black ON-OFF plastic handle and shaft as standard. The handle is IP65, NEMA 1, 3R, 12 protected, padlockable in the OFF-position and with door interlock in the ON-position. The shaft is adjustable for a range of installation depths. Fuse standards UL 248.

Ampere rating [A]	Horsepower rating 240/480/600V [HP]	Fuse size	No. of poles	Type	Order number	Units/ type [pcs]	Weight/ unit [kg]
Mechanism at the end of the switch fuse							
Terminal bolt kit							
200	60/125/150	J/200A	2	OS200J02P	1SCA107598R1001	1	2.4
200	60/125/150	J/200A	3	OS200J03P	1SCA022709R9760	1	3.3
200	60/125/150	J/200A	4	OS200J04FP	1SCA022758R9770	1	4.2
400	125/250/350	J/400A	2	OS400J02P	1SCA107596R1001	1	5.6
400	125/250/350	J/400A	3	OS400J03P	1SCA022719R1140	1	7.3
400	125/250/350	J/400A	4	OS400J04FP	1SCA022755R3740	1	9.3
600	200/400/500	J/600A	2	OS600J02P	1SCA107595R1001	1	10.3
600	200/400/500	J/600A	3	OS600J03P	1SCA022825R8870	1	13.6
600	200/400/500	J/600A	4	OS600J04FP	1SCA022839R4030	1	16.9
800	250/500/500	L/800A	2	OS800L02P	1SCA116921R1001	1	10.3
800	250/500/500	L/800A	3	OS800L03P	1SCA022825R9920	1	13.6
800	250/500/500	L/800A	4	OS800L04FP	1SCA022839R5430	1	16.9
1200		L/1200A	2	OS1200L02P	1SCA116925R1001	1	37
1200		L/1200A	3	OS1200L03P	1SCA105468R1001	1	46
1200		L/1200A	4	OS1200L04FP	1SCA105466R1001	1	55

[1] Information on cULus and UL approval on request.

Shafts and handles included as standard

Suitable for switches	Included shaft	Included handle	Incl. terminal bolts
OS200_P	OXP6X210	OHB65J6	M8X25
OS400_P	OXP12X250	OHB95J12	M10X30
OS600...800_P	OXP12X280	OHB145J12	M12X40
OS1200_P	OXP12X395	OHB274J12	M12X50

Ordering information
Switch fuses, UL- and CSA-types

(OS Mini)
OS30FA_
S01146A



OS60GJS30K
S07009



OS100GJS30K
S07012



Side operated fusible disconnect switches with pistol handle

Including a black ON-OFF plastic handle and shaft as standard. The shaft is adjustable for a range of mounting depths. The handle is IP65 protected, Nema type 1, 3R, 12, padlockable in the OFF-position and with door interlock in the ON-position. Shaft mounting depths measured from the left side of the switch, 3-pole: H=154...166mm and 4-pole: H=189...201mm. Fuse standards UL 248.

Ampere rating [A]	Horsepower rating 240/480/600V [HP]	Fuse size	No. of poles	Type	Order number	Units/ type [pcs]	Weight/ unit [kg]
Protected tunnel terminals, IP20.							
30	7.5/15/20	CC, 30A	3	OS30FACCS30P	1SCA108999R1001	1	0.7
30	7.5/15/20	J, 30A	3	OS30FAJS30P	1SCA108838R1001	1	0.7

Side operated fusible disconnect switches with direct mounted handle

Including terminal bolt set (OS100G), a black Test-ON-OFF plastic handle and shaft as standard. The handle is padlockable in the OFF-position. Fuse standards UL 248.

Ampere rating [A]	Horsepower rating 240/480/600V [HP]	Fuse size	No. of poles	Type	Order number	Units/ type [pcs]	Weight/ unit [kg]
Protected tunnel terminals, IP20.[1)]							
60	15/30/50	J, 60A	3	OS60GJS30K	1SCA116426R1001	1	1.3
60	15/30/50	J, 60A	4	OS60GJS40FK	1SCA115941R1001	1	1.6
Terminal bolt kit							
100	30/60/75	J, 100A	3	OS100GJS30K	1SCA115942R1001	1	1.5
100	30/60/75	J, 100A	4	OS100GJS40FK	1SCA115943R1001	1	1.8

F = Fused switched neutral
[1)] Approval pending

Shafts and handles included as standard

Suitable for switches	Included shaft	Included handle	Incl. terminal bolts
OS30FA_P (OS Mini)	OXP6X70-V0	OHB65J6	
OS60GJS_K	OXP6X42-TO	OHB65D6	
OS100GJS_K	OXP6X42-TO	OHB65D6	M8X25

Ordering information
Switch fuses, UL- and CSA-types

OS60GJS30
S07169



OS100GJS30
S07171



Side operated fusible disconnect switches without handle

Including terminal bolt set (OS100G). Fuse standards UL 248.

Ampere rating [A]	Horsepower rating 240/480/600V [HP]	Fuse size	No. of poles	Type	Order number	Units/ type [pcs]	Weight/ unit [kg]
Protected tunnel terminals, IP20.[1]							
60	15/30/50	J, 60A	3	OS60GJS30	1SCA116051R1001	1	1.3
60	15/30/50	J, 60A	4	OS60GJS40N1	1SCA116763R1001	1	1.6
60	15/30/50	J, 60A	4	OS60GJS40F	1SCA115970R1001	1	1.6
Terminal bolt kit							
100	30/60/75	J, 100A	3	OS100GJS30	1SCA115971R1001	1	1.5
100	30/60/75	J, 100A	4	OS100GJS40N1	1SCA116764R1001	1	1.8
100	30/60/75	J, 100A	4	OS100GJS40N2	1SCA116765R1001	1	1.8
100	30/60/75	J, 100A	4	OS100GJS40F	1SCA115972R1001	1	1.8

F = Fused switched neutral
N1 = Non-fused switched neutral on the left side
N2 = Non-fused switched neutral on the right side
[1] Approval pending

Terminal bolts included as standard

Suitable for switches	Included shaft	Included handle	Incl. terminal bolts
OS100GJS_			M8X25

Ordering information
Motorized switch fuses OSM, DIN-type

OSM32...63_M_
S07020



OSM100...160_M_
S07021



OSM200...250_M_
S07022



OSM400_M_
S07023

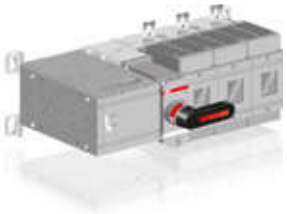

OSM630...800_M_
S07024

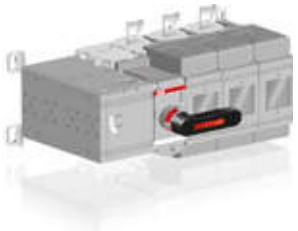

OSM1250_M_
S07025



Motorized switch fuses OSM

Including a handle for manual operation, bolt kit with nut and washers for all terminals (100A…1250A), male connectors for control circuit and a handle and spare fuse storage clip.
Type codes for motor voltage U_e = 220-240 VAC

Rated current AC-20...23 ≤ 690V	Fuse size	No. of poles	Type	Order number	Units/ type [pcs]	Weight/ unit [kg]
32	000	3	OSM32GD3M230C	1SCA116664R1001	1	7.0
32	000	4	OSM32GD4N2M230C	1SCA118822R1001	1	7.3
63	000	3	OSM63GD3M230C	1SCA116660R1001	1	7.0
63	000	4	OSM63GD4N2M230C	1SCA118865R1001	1	7.3
125	000,00	3	OSM125GD3M230C	1SCA116674R1001	1	7.6
125	000,00	4	OSM125GD4N2M230C	1SCA118828R1001	1	7.9
160	000,00	3	OSM160GD3M230C	1SCA116673R1001	1	7.6
160	000,00	4	OSM160GD4N2M230C	1SCA118831R1001	1	7.9
200	0	3	OSM200D3M230C	1SCA104284R1001	1	9.6
200	0	3+N	OSM200D3N3M230C	1SCA104282R1001	1	9.8
200	0	4	OSM200D4N2M230C	1SCA118836R1001	1	10.7
250	0-1	3	OSM250D3M230C	1SCA104295R1001	1	10.4
250	0-1	3+N	OSM250D3N3M230C	1SCA104297R1001	1	10.5
250	0-1	4	OSM250D4N2M230C	1SCA118838R1001	1	11.2
400	0-2	3	OSM400D3M230C	1SCA104315R1001	1	14.8
400	0-2	3+N	OSM400D3N3M230C	1SCA104317R1001	1	15.1
400	0-2	4	OSM400D4N2M230C	1SCA118842R1001	1	16.7
630	3	3	OSM630D3M230C	1SCA104518R1001	1	34
630	3	3+N	OSM630D3N3M230C	1SCA104533R1001	1	35
630	3	4	OSM630D4N2M230C	1SCA118846R1001	1	38
800	3	3	OSM800D3M230C	1SCA104522R1001	1	34
800	3	3+N	OSM800D3N3M230C	1SCA104534R1001	1	35
800	3	4	OSM800D4N2M230C	1SCA118847R1001	1	38
1250	4	3	OSM1250D3M230C	1SCA112549R1001	1	55
1250	4	3+N	OSM1250D3N3M230C	1SCA112547R1001	1	56
1250	4	4	OSM1250D4N2M230C	1SCA118850R1001	1	65
1250	4a	3	OSM1250DA3M230C	1SCA112546R1001	1	55
1250	4a	3+N	OSM1250DA3N3M230C	1SCA112544R1001	1	56
1250	4a	4	OSM1250DA4N2M230C	1SCA118851R1001	1	65

Number of poles: 3+N / Type: _N3_ = Include a detachable neutral link integrated into the mechanism
N2 = Non-fused switched neutral on the right side
Available on request: F = Fused switched neutral and N1 = Non-fused switched neutral on the left side

Handles and bolt kits included as standard

Suitable for switch fuses	Handle+shaft kit	Bolt kit
OSM32…63	OTV250EMK	-
OSM100…200	OTV250EMK	M8x25
OSM250	OTV250EMK	M10X30
OSM400	OTV400EMK	M10X30
OSM630…800	OTV800EMK	M12X40
OSM1250	OTV1000EMK	M12X50

Ordering information
Motorized switch fuses OSM, BS-type

OSM32...63_M_
S07020



OSM100...160_M_
S07021



OSM200...250_M_
S07022



OSM315...400_M_
S07023

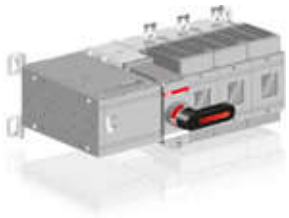

OSM630...800_M_
S07024

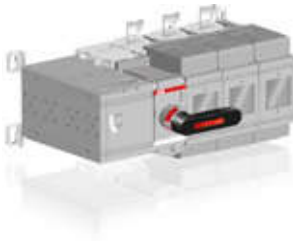

OSM1250_M_
S07025



Motorized switch fuses OSM

Including a handle for manual operation, bolt kit with nut and washers for all terminals (100A…1250A), male connectors for control circuit and a handle and spare fuse storage clip. Type codes for motor voltage U_e = 220-240 VAC.

Rated current AC-20...23 ≤ 690V	Fuse size	No. of poles	Type	Order number	Units/ type [pcs]	Weight/ unit [kg]
32	A2-A3	3	OSM32GB3M230C	1SCA116662R1001	1	7.0
32	A2-A3	4	OSM32GB4N1M230C	1SCA118775R1001	1	7.3
63	A2-A3	3	OSM63GB3M230C	1SCA116657R1001	1	7.0
63	A2-A3	4	OSM63GB4N1M230C	1SCA118776R1001	1	7.3
100	A2-A4	3	OSM100GB3M230C	1SCA116679R1001	1	7.6
100	A2-A4	4	OSM100GB4N1M230C	1SCA118779R1001	1	7.9
125	A2-A4	3	OSM125GB3M230C	1SCA116677R1001	1	7.6
125	A2-A4	4	OSM125GB4N1M230C	1SCA118780R1001	1	7.9
160	A2-A4	3	OSM160GB3M230C	1SCA116670R1001	1	7.6
160	A2-A4	4	OSM160GB4N1M230C	1SCA118781R1001	1	7.9
200	B1-B2	3	OSM200B3M230C	1SCA104272R1001	1	9.6
200	B1-B2	3+N	OSM200B3N3M230C	1SCA104323R1001	1	9.8
200	B1-B2	4	OSM200B4N1M230C	1SCA118784R1001	1	10.7
250	B1-B3	3	OSM250B3M230C	1SCA104287R1001	1	10.4
250	B1-B3	3+N	OSM250B3N3M230C	1SCA104290R1001	1	10.5
250	B1-B3	4	OSM250B4N1M230C	1SCA118785R1001	1	11.2
315	B1-B4	3	OSM315B3M230C	1SCA104303R1001	1	14.8
315	B1-B4	3+N	OSM315B3N3M230C	1SCA104306R1001	1	15.1
315	B1-B4	4	OSM315B4N1M230C	1SCA118788R1001	1	16.7
400	B1-B4	3	OSM400B3M230C	1SCA104310R1001	1	14.8
400	B1-B4	3+N	OSM400B3N3M230C	1SCA104312R1001	1	15.1
400	B1-B4	4	OSM400B4N1M230C	1SCA118789R1001	1	16.7
630	C1-C2	3	OSM630B3M230C	1SCA104516R1001	1	34
630	C1-C2	3+N	OSM630B3N3M230C	1SCA104535R1001	1	35
630	C1-C2	4	OSM630B4N1M230C	1SCA118791R1001	1	38
800	C1-C3	3	OSM800B3M230C	1SCA104520R1001	1	34
800	C1-C3	3+N	OSM800B3N3M230C	1SCA104536R1001	1	35
800	C1-C3	4	OSM800B4N1M230C	1SCA118792R1001	1	38
1250	D1	3	OSM1250B3M230C	1SCA112552R1001	1	55
1250	D1	3+N	OSM1250B3N3M230C	1SCA112550R1001	1	56
1250	D1	4	OSM1250B4N1M230C	1SCA118795R1001	1	65

Number of poles: 3+N / Type: _N3_ = Include a detachable neutral link integrated into the mechanism
N1 = Non-fused switched neutral on the left side
Available on request: F = Fused switched neutral, N2 = Non-fused switched neutral on the right side

Handle and bolt kits included as standard

Suitable for switch fuses	Handle+shaft kit	Bolt kit
OSM32…63	OTV250EMK	-
OSM100…200	OTV250EMK	M8x25
OSM250	OTV250EMK	M10X30
OSM315…400	OTV400EMK	M10X30
OSM630…800	OTV800EMK	M12X40
OSM1250	OTV1000EMK	M12X50

Ordering information
Motorized switch fuses OSM, NFC-type

OSM50GF3M_
S07020



OSM125GF3M_
S07021



Motorized switch fuses OSM

Including a handle for manual operation, bolt kit with nut and washers for all terminals (125A), male connectors for control circuit and a handle and spare fuse storage clip. Type codes for motor voltage U_e = 220-240 VAC.

Rated current AC-20...23 ≤ 690V	Fuse size	No. of poles	Type	Order number	Units/ type [pcs]	Weight/ unit [kg]
50	14X51	3	OSM50GF3M230C	1SCA116666R1001	1	7.0
50	14X51	4	OSM50GF4N1M230C	1SCA118871R1001	1	7.3
125	22X58	3	OSM125GF3M230C	1SCA116681R1001	1	7.6
125	22X58	4	OSM125GF4N1M230C	1SCA118798R1001	1	7.9

N1 = Non-fused switched neutral on the left side
Available on request: F = Fused switched neutral, N2 = Non-fused switched neutral on the right side

Handle and bolt kits included as standard

Suitable for switch fuses	Handle+shaft kit	Bolt kit
OSM50	OTV250EMK	-
OSM125	OTV250EMK	M8x25

Accessories
Selection overview

OS16...OS40 (OS Mini)

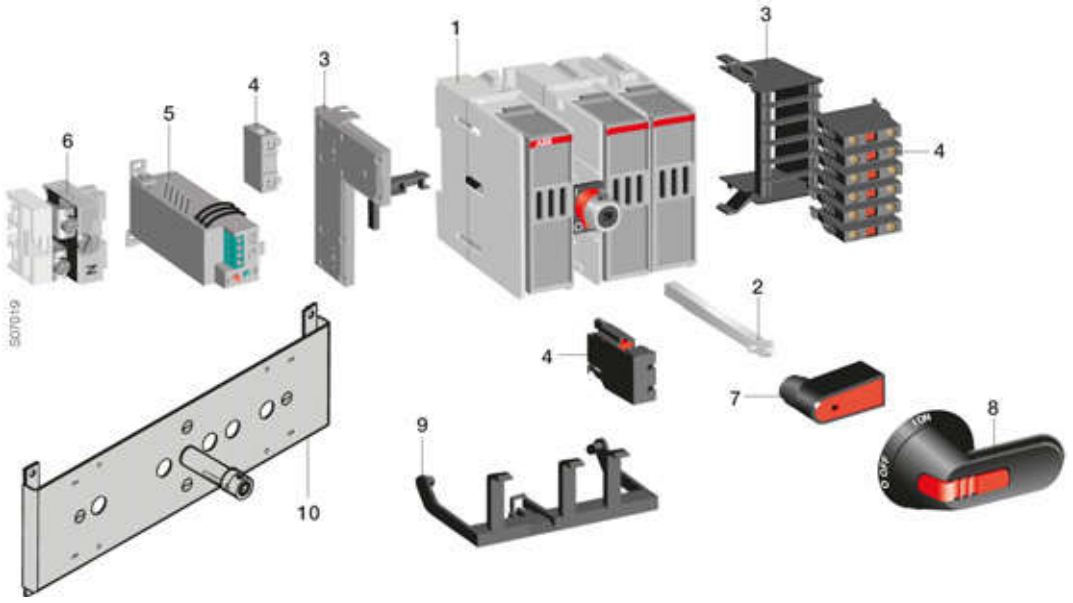

1 Switch fuse | 2 Extended shaft | 3 Mounting frame for auxiliary contact | 4 Auxiliary contact | 5 Fuse monitor | 6 Detachable neutral link | 7 Handle knob | 8 Pistol type handle | 9 Blown fuse indicator | 10 Conversion kit: 6/8-pole, C/O, mech. interlock

OS32G...OS63G

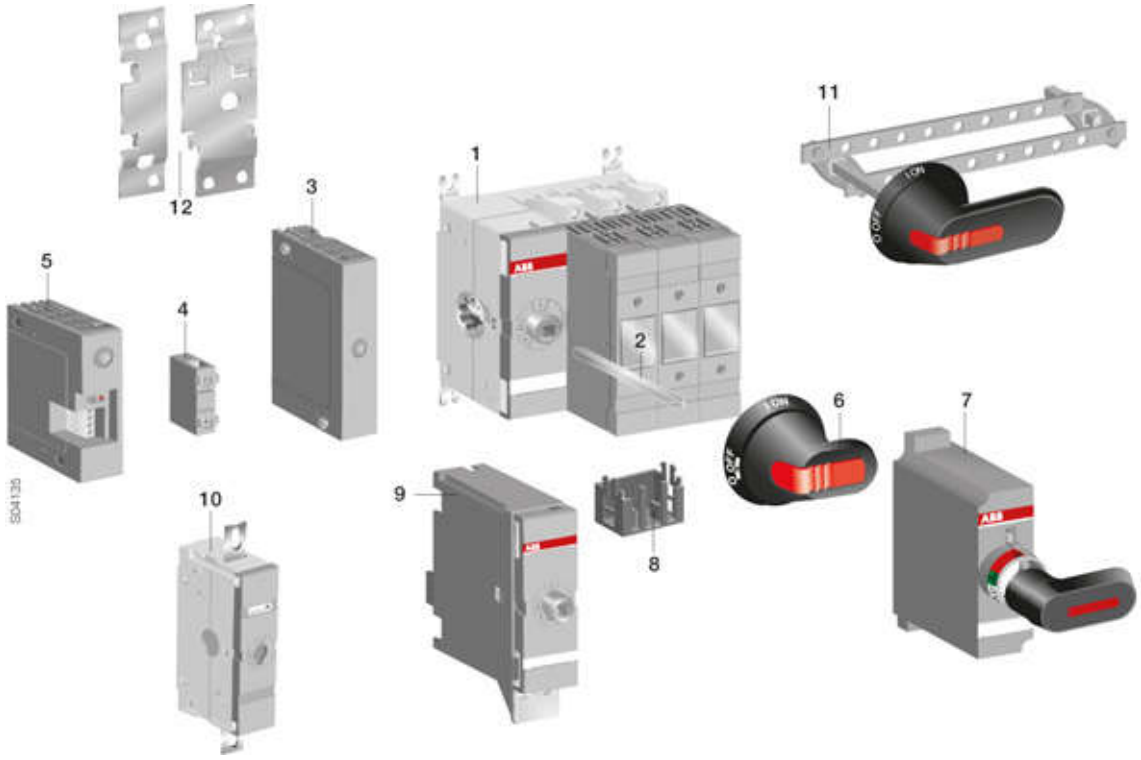

1 Switch fuse | 2 Extended shaft | 3 Module for auxiliary contacts | 4 Auxiliary contact | 5 Fuse monitor | 6 Pistol type handle | 7 Direct mounted handle | 8 Blown fuse indicator | 9 Interlocks, mechanical & electrical | 10 Detachable neutral link | 11 Conversion kit: 6/8-pole, C/O, bypass, mech. interlock | 12 DIN rail mounting kit

OS100G...OS1250_

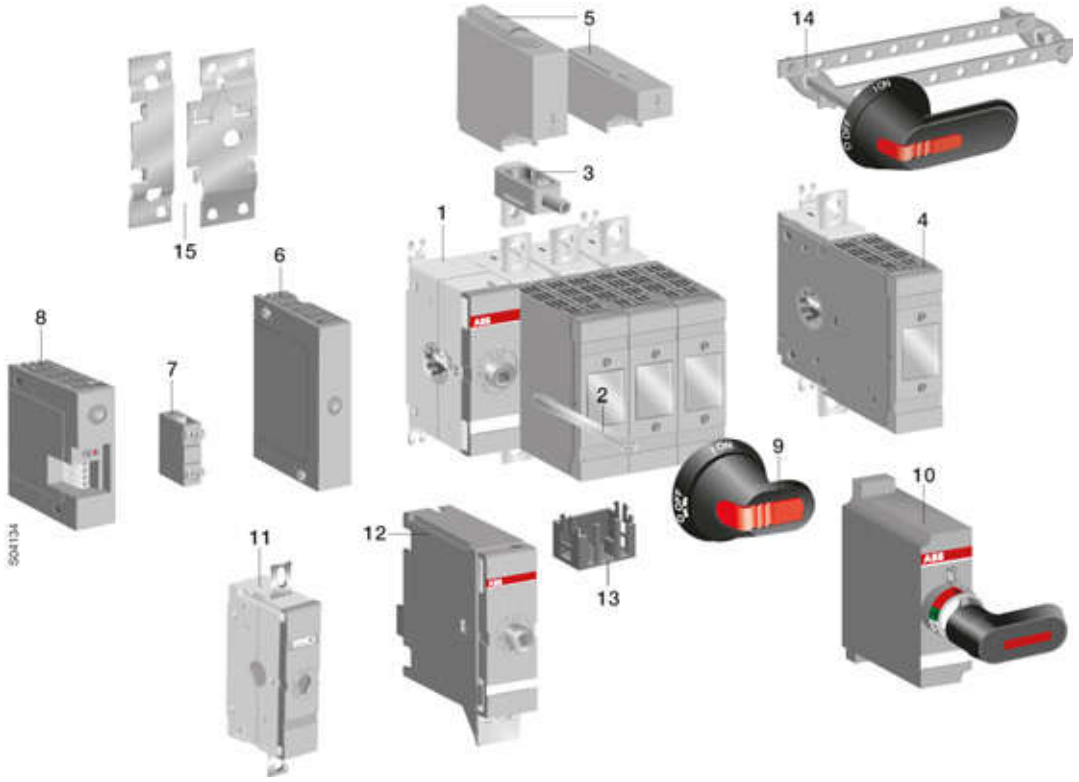

1 Switch fuse | 2 Extended shaft | 3 Terminal clamp | 4 Fourth pole | 5 Terminal shroud | 6 Module for auxiliary contacts | 7 Auxiliary contact | 8 Fuse monitor | 9 Pistol type handle | 10 Direct mounted handle | 11 Detachable neutral link | 12 Interlocks, mechanical & electrical | 13 Blown fuse indicator | 14 Conversion kit: 6/8-pole, C/O, bypass, mech. interlock | 15 DIN rail mounting kit (only for OS100G...160G_)

OSM32G...OSM1250

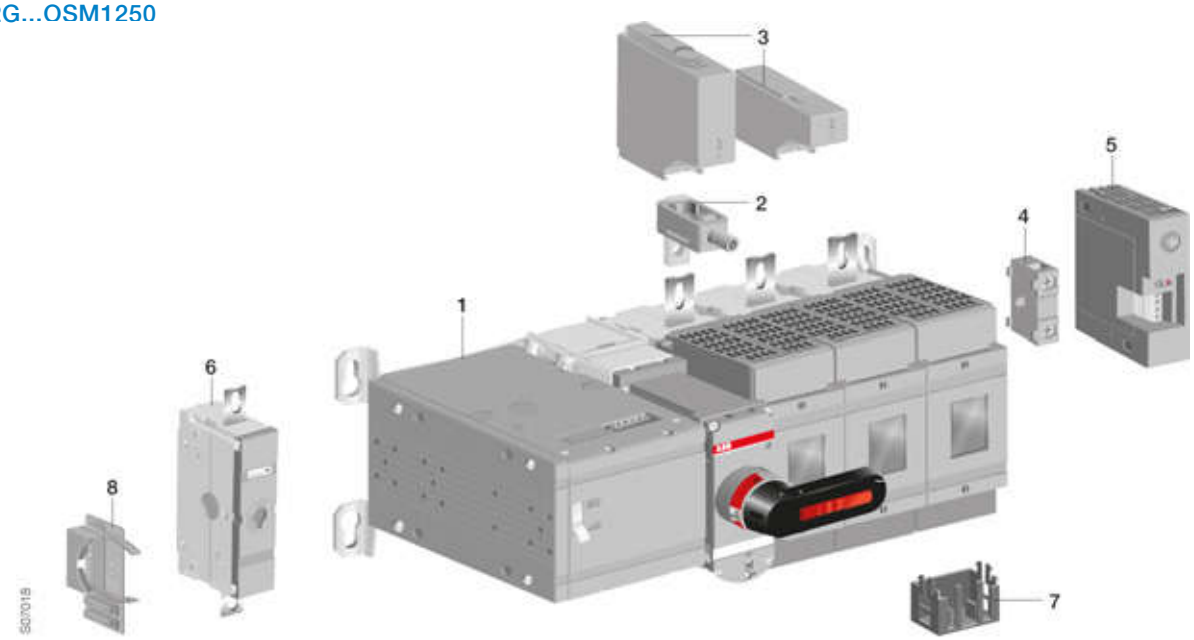

1 Motor operator | 2 Terminal clamp | 3 Terminal shroud | 4 Auxiliary contact | 5 Fuse monitor | 6 Detachable neutral link | 7 Blown fuse indicator | 8 Storage for handle and fuses

Ordering information
Accessories

OHB65J6
S00601A

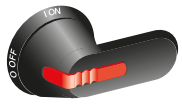

OHY65J6
S00836A

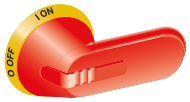

OHG65J6
S01200A

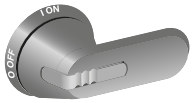

OHB_
S00469A

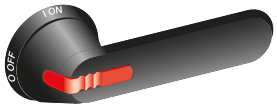

Optional handles for front operated switch fuses

Plastic pistol type handles, IP 65, Nema type 1, 3R, 12

Padlockable with 3 padlocks in the OFF-position, door interlock in the ON-position. Units/type = 1 pcs. Screw fixing from the back side of the handle, no screws on the front, ensures double insulation.

Colour	Handle length [mm]	Type	Order number	Delivery batch [pcs]	Weight/ unit [kg]
For shaft diameter 6 mm (for OSMini and OS32...250)					
Black and red-yellow: I-O/ON-OFF, grey: I-O.					
Black	45	OHB45J6	1SCA022380R8770	100	0.12
Red-yellow	45	OHY45J6	1SCA022380R8930	100	0.12
Grey	45	OHG45J6	1SCA022380R8850	100	0.12
Black	65	OHB65J6	1SCA022380R9660	100	0.12
Red-yellow	65	OHY65J6	1SCA022380R9820	100	0.12
Grey	65	OHG65J6	1SCA022380R9740	100	0.12
Black	80	OHB80J6	1SCA022381R0240	100	0.14
Black and red-yellow: Test/I-O/ON-OFF, grey: Test/I-O.					
Black	45	OHB45J6T	1SCA109870R1001	100	0.12
Black	65	OHB65J6T	1SCA022399R8110	100	0.12
Red-yellow	65	OHY65J6T	1SCA022456R9540	100	0.12
Grey	65	OHG65J6T	1SCA022456R9620	100	0.12
Black	80	OHB80J6T	1SCA022399R8290	100	0.14
For shaft diameter 12 mm (for OS315...400)					
Black and red-yellow: I-O/ON-OFF, grey: I-O.					
Black	95	OHB95J12	1SCA022381R0830	90	0.16
Red-yellow	95	OHY95J12	1SCA022381R1050	90	0.16
Grey	95	OHG95J12	1SCA022381R0910	90	0.16
Indication: Test-OFF-ON/Test-O-I					
Black	95	OHB95J12T	1SCA022736R1750	90	0.16
Red-yellow	95	OHY95J12T	1SCA022736R1910	90	0.16
For shaft diameter 12 mm (for OS630...800)					
Black and red-yellow: I-O/ON-OFF, grey: I-O.					
Black	125	OHB125J12	1SCA022381R1560	90	0.16
Red-yellow	125	OHY125J12	1SCA022381R1720	90	0.16
Grey	125	OHG125J12	1SCA022381R1640	90	0.16
Black	145	OHB145J12	1SCA022381R2110	90	0.17
Red-yellow	145	OHY145J12	1SCA022381R2370	90	0.17
Grey	145	OHG145J12	1SCA022381R2290	90	0.17
Black	175	OHB175J12	1SCA022381R2450	90	0.18
Red-yellow	175	OHY175J12	1SCA022381R2700	90	0.18
Grey	175	OHG175J12	1SCA022381R2610	90	0.18
Indication: Test-OFF-ON/Test-O-I					
Black	125	OHB125J12T	1SCA022652R2220	90	0.16
Red-yellow	125	OHY125J12T	1SCA022652R2310	90	0.16
Black	145	OHB145J12T	1SCA022652R2570	90	0.17
Red-yellow	145	OHY145J12T	1SCA022652R2650	90	0.17
Black	175	OHB175J12T	1SCA022708R0740	90	0.18

- Door interlocking in the ON-position means that the door cannot be opened, when the handle is in the ON-position. This can be defeated to allow authorized personnel access for inspection.
- Handles padlockable in all positions are available on request.

Ordering information
Accessories

OHB274/330J12
S07078

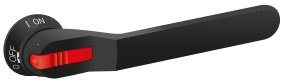

OHB_P
S02195A



OHM_
S02140A

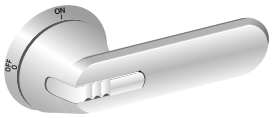

YASDA_
S00097A

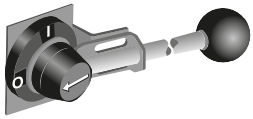

Optional handles for front operated switch fuses

Plastic pistol type handles, IP 65, Nema type 1, 3R, 12

Padlockable with 3 padlocks in the OFF-position, door interlock in the ON-position. Units/type = 1 pcs. Screw fixing from the back side of the handle, no screws on the front, ensures double insulation.

Colour	Handle length [mm]	Type	Order number	Delivery batch [pcs]	Weight/ unit [kg]
For shaft diameter 12 mm (for OS1200...1250)					
Black and red-yellow: I-O/ON-OFF.					
Black	274	OHB274J12	1SCA115920R1001	25	0.54
Red-yellow	274	OHY274J12	1SCA115919R1001	25	0.54
Black	330	OHB330J12	1SCA115922R1001	25	0.58
Red-yellow	330	OHY330J12	1SCA115921R1001	25	0.58
Black	2x150	OHB150J12P	1SCA022865R9430	50	0.17
Red-yellow	2x150	OHY150J12P	1SCA101586R1001	50	0.17
Black	2x200	OHB200J12P	1SCA022865R9510	50	0.40
Red-yellow	2x200	OHY200J12P	1SCA101587R1001	50	0.40
Indication: Test-OFF-ON/Test-O-I					
Black	274	OHB274J12T	1SCA120250R1001	25	0.54
Black	330	OHB330J12T	1SCA120252R1001	25	0.58
Black	2x200	OHB200J12PT	1SCA106510R1001	50	0.40
Red-yellow	2x200	OHY200J12PT	1SCA111512R1001	50	0.40

- Door interlocking in the ON-position means that the door cannot be opened, when the handle is in the ON-position. This can be defeated to allow authorized personnel access for inspection.
- Handles padlockable in all positions are available on request.

Stainless steel pistol type handles, IP66, NEMA 4X

Padlockable with 3 padlocks in the OFF-position, door interlock in the ON-position, indication: I-O/ON-OFF

Colour	Handle length [mm]	Type	Order number	Units/ type [pcs]	Weight/ unit [kg]
For shaft diameter 6 mm (for OSMini and OS32...250)					
Metallic	65	OHM65L6	1SCA022739R1070	1	0.73
For shaft diameter 12 mm					
Metallic	125	OHM125L12	1SCA022739R1150	1	0.76
Metallic	175	OHM175L12	1SCA022739R1230	1	0.83
Metallic	275	OHM275L12	1SCA022832R4840	1	0.96

Metallic pistol type handles

Padlockable with 3 padlocks in OFF-position, door interlock in the ON-position.

For shaft diameter 12 mm					
Black 1-0	220	YASDA 7	1SCA022071R3010	1	0.70
Black ON-OFF	220	YASDA 8	1SCA022071R3270	1	0.70
Black I-0	320	YASDA35	1SCA104400R1001	1	0.80

Ordering information
Accessories

OH_E00S
S07004



OHZX14
S02194A



Optional handles for side operated switch fuses

Plastic pistol type handles , IP 65, Nema type 1, 3R, 12

For mounting on the side of the enclosure. Padlockable with three padlocks in the OFF-position, door interlock in the ON-position, IP 65. The position indications are rotated 90°. If the handle is mounted on the front of the door, a standard handle can be used as well. Units/ type = 1 pcs.

Colour	Handle length [mm]	Type	Order number	Delivery batch [pcs]	Weight/ unit [kg]
For shaft diameter 6 mm					
Plastic handles, black and red-yellow: I-O/ON-OFF, grey: I-O.					
Black	65	OHB65J6E00S	1SCA022382R9850	100	0.12
Red-yellow	65	OHY65J6E00S	1SCA022382R9930	100	0.12
Grey	65	OHG65J6E00S	1SCA022383R4510	100	0.12
Plastic handles, black and red-yellow: Test/I-O/ON-OFF, grey: Test/I-O.					
Black	65	OHB65J6TE00S	1SCA109016R1001	100	0.12
Red-yellow	65	OHY65J6TE00S	1SCA022688R0140	100	0.12
Grey	65	OHG65J6TE00S	1SCA109014R1001	100	0.12
For shaft diameter 12 mm					
Plastic handles, indication I-O/ON-OFF					
Black	145	OHB145J12E00S	1SCA022679R9700	90	0.17

- Door interlocking in the ON-position means that the door cannot be opened, when the handle is in the ON-position. This can be defeated to allow authorized personnel access for inspection.
- Handles padlockable in all positions are available on request.

Extension ring for pistol type handles

Suitable for handles	Colour	Type	Order number	Units/ type [pcs]	Weight unit [kg]
OHB_	Black	OHZX14	1SCA022851R6590	1	0.06

Ordering information
Accessories

OHBS5
S00435A S00659A



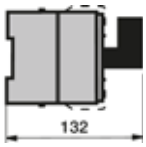

OSV_
S01985A



OSV1250DK
S07113



OHB4
S00778A



OFAE504
S00370A



OFAE505
S00371A



Direct mounted handles

Plastic handles for front operated switch fuses

Panel board handle, can be padlocked in the OFF-position. Includes a special shaft.
The handle can also be used with a standard shaft as padlocking device.

Suitable for switches	Colour	Type	Order number	Units/ type [pcs]	Weight/ unit [kg]
Suitable for OS Mini					
Indication: I-O/ON-OFF/TEST					
Padlockable with 2 padlocks in the OFF- and Test-positions when the door is open. Max. bail dia 8 mm.					
OS16F…40F_	Black	OHBS5	1SCA109015R1001	1	0.05
Suitable for OS 32G...1250					
Indication: Test OFF-ON/Test O-I indication					
Padlockable with three padlocks in the OFF-position, optionally also in the ON-position.					
Includes shaft and mechanism cover.					
OS32G...160G,	Black	OSV200BK	1SCA022779R7530	1	0.14
OS200B/J_K	Red-yellow	OSVY200BK	1SCA022779R7700	1	0.14
OS200D…250D/B_K	Black	OSV250DK	1SCA022763R3510	1	0.16
OS200D…250D/B_K	Red-yellow	OSVY250DK	1SCA022778R6500	1	0.16
OS400D_K	Black	OSV400DK	1SCA022763R4230	1	0.34
OS400D_K	Red-yellow	OSVY400DK	1SCA022779R5590	1	0.34
OS315…400B/J_K	Black	OSV400BK	1SCA022763R3930	1	0.33
OS315…400B/J_K	Red-yellow	OSVY400BK	1SCA022779R5830	1	0.33
OS600…800_K	Black	OSV800DK	1SCA107794R1001	1	1.1
OS600…800_K	Red-yellow	OSVY800DK	1SCA108703R1001	1	1.1
OS1200...OS1250_K	Black	OSV1250DK	1SCA107797R1001	1	1.5
OS1200...OS1250_K	Red-yellow	OSVY1250DK	1SCA108702R1001	1	1.5

Plastic handles for side operated switch fuses

Panel board handle, can be padlocked in the OFF-position. Includes a special shaft.
The handle can also be used with a standard shaft as padlocking device.

Suitable for switches	Colour	Type	Order number	Units/ type [pcs]	Weight/ unit [kg]
Suitable for OS Mini					
Padlockable with three padlocks in the OFF- position when the door is open. Max. bail dia 6 mm.					
OS16F…40F_	Black	OHB4	1SCA022439R4050	1	0.05

Fuse replacement handles

For DIN-fuse sizes	Description	Type	Order number	Units/ type [pcs]	Weight/ unit [kg]
000, 00, 1, 2, 3	Compact	OFAE 504	1SCA022007R6880	1	0.16
000, 00, 1, 2, 3	690 V	OFAE 505	2CMA125276R1000	1	0.80

Ordering information
Accessories

OHP6X_
S00050A



OHP_X_-45
S00669A



Extended shafts

Units/type = 1 piece

Shaft length [mm]	Front operated H [mm]	Side operated H [mm]	Type	Order number	Delivery batch [pcs]	Weight/ unit [kg]
For OS 16...35 (Mini)[2], shaft diameter 6 mm						
150	135...210	154...166	OXP6X150[5]	1SCA022295R5600	10	0.05
170	155...230	174...186	OXP6X170	1SCA108224R1001	10	0.05
265	250...325	269...281	OXP6X265	1SCA108225R1001	10	0.08
400	385...460	404...416	OXP6X400	1SCA108226R1001	10	0.12
150	135...210	154...166	OXP6X150-45[1]	1SCA022294R4400	10	0.05
170	155...230	174...186	OXP6X170-45[1]	1SCA108227R1001	10	0.05
265	380...460	269...281	OXP6X265-45[1]	1SCA108228R1001	10	0.08
400	380...460	404...416	OXP6X400-45[1]	1SCA108229R1001	10	0.12
For OS 40 (Mini)[2], shaft diameter 6 mm						
150	135...210	235...243	OXP6X150[5]	1SCA022295R5600	10	0.05
170	155...230	255...363	OXP6X170	1SCA108224R1001	10	0.05
265	250...325	352...360	OXP6X265	1SCA108225R1001	10	0.08
400	385...460	487...495	OXP6X400	1SCA108226R1001	10	0.12
150	135...210	235...243	OXP6X150-45[1]	1SCA022294R4400	10	0.05
170	155...230	255...363	OXP6X170-45[1]	1SCA108227R1001	10	0.05
265	250...325	352...360	OXP6X265-45[1]	1SCA108228R1001	10	0.08
400	385...460	487...495	OXP6X400-45[1]	1SCA108229R1001	10	0.12
For OS 32G...63G[4] , shaft diameter 6 mm						
63		161…167	OXP6X63	1SCA111010R1001	10	0.02
90		188…194	OXP6X90	1SCA022064R1180	10	0.03
130	127…174[6]	228…234	OXP6X130	1SCA022057R0570	10	0.04
161	138…205		OXP6X161[3]	1SCA022067R1760	10	0.05
210	187…254		OXP6X210	1SCA022295R6080	10	0.06
290	267…334		OXP6X290	1SCA022042R6370	10	0.08
360	337…404		OXP6X360	1SCA022042R6530	10	0.10
430	407…474		OXP6X430	1SCA022056R6030	10	0.12
210	187…254		OXP6X210-45[1]	1SCA022294R4230	10	0.06
290	267…334		OXP6X290-45[1]	1SCA022304R4290	10	0.08
360	337…404		OXP6X360-45[1]	1SCA022341R4640	10	0.10

[1] The shaft position is rotated 45 degrees
[2] Side operated, 4-pole: add 36 mm
[3] Included as standard in P-types
[4] Side operated 3-pole OS60GJ: add 33mm, 4-pole types: OS32…63GD/GB: add 23.5 mm, OS60GJ: add 68mm
[5] Included as standard in front operated types
[6] OS32…63GB/GF: 115…174

Ordering information
Accessories

OHP6X_
S00050A



OHP_X_-45
S00669A



OHP12X_
S00047A

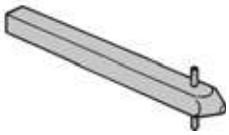

Extended shafts

Units/type = 1 piece

Shaft length [mm]	Front operated H [mm]	Side operated H [mm]	Type	Order number	Delivery batch [pcs]	Weight/ unit [kg]
For OS100G...160G[2], shaft diameter 6 mm						
63		196…202	OXP6X63	1SCA111010R1001	10	0.02
90		223…229	OXP6X90	1SCA022064R1180	10	0.03
130	137…174[4]	263…269	OXP6X130	1SCA022057R0570	10	0.04
161	138…205		OXP6X161[3]	1SCA022067R1760	10	0.05
210	187…254		OXP6X210	1SCA022295R6080	10	0.06
290	267…334		OXP6X290	1SCA022042R6370	10	0.08
360	337…404		OXP6X360	1SCA022042R6530	10	0.10
430	407…474		OXP6X430	1SCA022056R6030	10	0.12
210	187…254		OXP6X210-45[1]	1SCA022294R4230	10	0.06
290	267…334		OXP6X290-45[1]	1SCA022304R4290	10	0.08
360	337…404		OXP6X360-45[1]	1SCA022341R4640	10	0.10
For OS 200...250 DIN-type, shaft diameter 6 mm						
161	160...205		OXP6X161	1SCA022067R1760	10	0.05
210	189...254		OXP6X210[3]	1SCA022295R6080	10	0.06
290	269...334		OXP6X290	1SCA022042R6370	10	0.08
For OS 200...250 BS-type, shaft diameter 6 mm						
161	140…205		OXP6X161	1SCA022067R1760	10	0.05
210	189…254		OXP6X210[3]	1SCA022295R6080	10	0.06
290	269…334		OXP6X290	1SCA022042R6370	10	0.08
For OS 315...400, shaft diameter 12 mm						
250	230…325		OXP12X250[3]	1SCA022325R6980	1	0.30
280	260…355		OXP12X280	1SCA022137R5140	1	0.30
325	305…400		OXP12X325	1SCA022042R5810	1	0.36
395	375…470		OXP12X395	1SCA022042R5990	1	0.43
465	445…540		OXP12X465	1SCA022042R6020	1	0.51
535	515…610		OXP12X535	1SCA022042R6110	1	0.59

[1] The shaft position is rotated 45 degrees
[2] Side operated 4-pole types: add 35mm
[3] Included as standard in P-types
[4] OS100GJ: 113…174, OS100GB…160GB: 121…174

Ordering information
Accessories

OHP12X_
S00047A

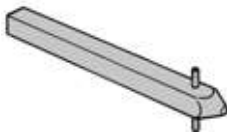

OHP12X_-45
S00669A



OETLZX95
S00080A

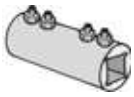

OETLZK19
S01035A

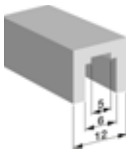

Extended shafts

Shaft length [mm]	Front operated H [mm]	H [mm]	Type	Order number	Units/ type [pcs]	Weight/ unit [kg]
For OS 630...800, shaft diameter 12 mm						
280	258...382		OXP12X280[2]	1SCA022137R5140	1	0.30
325	303...427		OXP12X325	1SCA022042R5810	1	0.40
395	373...497		OXP12X395	1SCA022042R5990	1	0.50
465	443...567		OXP12X465	1SCA022042R6020	1	0.60
535	513...637		OXP12X535	1SCA022042R6110	1	0.70
280	258...382		OXP12X280-45[1]	1SCA022382R0800	1	0.30
325	303...427		OXP12X325-45[1]	1SCA022304R4450	1	0.40
For OS 1200...1250, shaft diameter 12 mm						
395	366...495[3]	371...500[4]	OXP12X395[2]	1SCA022042R5990	1	0.43
465	436...565[3]	441...570[4]	OXP12X465	1SCA022042R6020	1	0.51
535	506...635[3]	441...571[4]	OXP12X535	1SCA022042R6110	1	0.59

[1] The shaft position is rotated 45 degrees
[2] Included as standard in front operated P-types
[3] H with handle OH_274/330J12
[4] H with handle OHB150/200J12P

Shaft extension socket

For extending the shaft of combination attachment.

Suitable for shaft with diameter [mm]	Type	Order number	Units/ type [pcs]	Weight/ unit [kg]
12	OETLZX95	1SCA022083R5620	1	0.04

Adapters for extension socket

Adapters to place inside of OETLZX 95 to connect shafts of different sizes.

Suitable for shaft with diameter [mm]	Type	Order number	Units/ type [pcs]	Weight/ unit [kg]
6/6, 6/12	OETLZK19	1SCA022093R1850	1	0.02

Ordering information
Accessories

OS Mini
S01399A

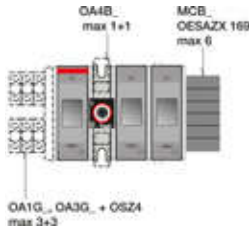

Auxiliary contacts for OS16F_…40F_ (OS Mini)

Units/type = 1 piece

MCB_
S00040A



Description	Type	Order number	Delivery batch [pcs]	Weight/ unit [kg]
Mounting to the switch mechanism				
Change over contacts				
Auxiliary/test contacts. Max. two change over contacts.				
See function chart below	OA4B1C	1SCA022193R0150	1	0.03
Single pole contacts				
> 3 mm contact gap.				
1 NO	OA4B10	1SCA022276R9050	1	0.03
1 NC	OA4B01	1SCA022276R9210	1	0.03

OA_G
S00261A



Mounting on the side of the switch				
Mounting on the side of the switch with aux.contact frame OESAZX 169				
1NO	MCB-10	1SCA022150R5110	1	0.03
1NC	MCB-01	1SCA022150R5370	1	0.03
Snap-on mounting on the switch, by using a frame OSZ4, IP20				
NO contacts are provided with a positive opening feature.				
Types _AU have gold plated contacts for harsh environments and low operating voltages.				
1 NO	OA1G10	1SCA022353R4970	10	0.03
1 NC	OA3G01	1SCA022456R7410	10	0.03
1 NO	OA1G10AU	1SCA022436R7910	10	0.03
1 NC	OA3G01AU	1SCA022819R5260	10	0.03

OSZ4
S01163B



Mounting frames for auxiliary contacts of OS16F_…40F_ (OS Mini)

OESAZX169
S00544A



Description	Amount of auxiliary contacts [pcs]	Type	Order number	Units/ type [pcs]	Weight/ unit [kg]
Frame for auxiliary contacts OA1G10 and OA3G01 and for fuse monitor					
Mounting on the left side of the switch	max. 6	OSZ4	1SCA022530R0200	1	0.06
Frame for MCB-_ auxiliary contacts. Not suitable for side operated switches					
Mounting on the right side of the switch	max. 6	OESAZX169	1SCA022196R9360	1	0.06

Function chart, change over contacts OA4B1C / OS Mini

Handle position	Main contacts	Aux./Test contacts N.O.
Test	open	closed
0	open	open
I	closed	closed

Ordering information
Accessories

OA_G_
S00261A



Auxiliary contacts for OS/OSM32G...1250

Types _AU have gold plated contacts for harsh environments and low operating voltages. Units/type = 1 piece.

Suitable for switches	Description	Protection degree	Type	Order number	Delivery batch [pcs]	Weight/ unit [kg]
OS/OSM32G...1250	1NO	IP20	OA1G10	1SCA022353R4970	10	0.03
OS/OSM32G...1250	1NC	IP20	OA3G01	1SCA022456R7410	10	0.03
OS/OSM32G...1250	1NO	IP20	OA1G10AU	1SCA022436R7910	10	0.03
OS/OSM32G...1250	1NC	IP20	OA3G01AU	1SCA022819R5260	10	0.03

Mounting under the mechanism cover

The “test” contacts operate in ON- and OFF-positions as well as when the handle is turned to TEST-position = 45 degrees over the OFF-position. The “test tindication” contacts operate only when the handle is turned to TEST-position. See the function table below. The OA1G10 (N.O.) or OA3G01 (N.C.) auxiliary contact blocks can be used as standard auxiliary contacts, “test” or “test indication” contacts. The desired functions are achieved when an auxiliary contact block is installed in a specific place shown in the mounting instruction. In order to activate the “test” and “test indication” features, a handle with test function is required. See the optional handles, pages 58...59.

Function table of OS/OSM32G...1250 auxiliary contacts

Handle position	Main contacts	Aux./Test contacts N.O.	Test indication contacts N.O.
Test	open	closed	closed
0	open	open	open
I	closed	closed	open

Maximum number of contact blocks, “Aux./test” contacts and “test indication” contacts, see the table below. Standard versions include all except for N3-types, which are equipped with integrated neutral through the mechanism.

Maximum number of auxiliary contacts under the mechanism cover

	OS/OSM32G...250		OS/OSM315...800		OS/OSM1200...1250	
Pole version	Standard	N3	Standard	N3	Standard	N3
Maximum number of contact blocks	4	0	8	4	12	8
Aux./Test contacts	4	0	4	2	8[1)]	6[2)]
Test indication contacts	2	0	4	2	4	2

The contact timing: see the chart, pages 115-116.
[1)] 6 aux/test contacts and 2 early operation aux./test contacts
[2)] 4 aux/test contacts and 2 early operation aux./test contacts

Mounting on the side of OS/OSM switch fuse

Mounting on the left side of the OS switch fuse:
Maximum 8 auxiliary contact blocks (N.O. or N.C.) with the OEA28 module.
Side operated types: OS_S30..._S40 types only.
Mounting on the right side of the OSM motorized switch fuse:
Maximum 4 auxiliary contact blocks (N.O. or N.C.), snap-on mounting.

Ordering information
Accessories

OEA28
S01641A



Module for auxiliary contacts for OS32...1250

Description	Type	Order number	Delivery batch [pcs]	Weight/ unit [kg]
Screw mounting to the left side of the switch	OEA28	1SCA022714R8810	1	0.04

Performance data for auxiliary contacts according to IEC 60947-5-1

OA1G_, OA3G_

U_i/[V]	690
U_{imp}/[kV]	4
Pollution degree	3
I_{th}/[A]	16
Cable size	1...2 x 0,75...2,5 mm²
Maximum fuse	16 A/gG
NEMA	A600, R300
Wire size	18 - 14AWG, 1 (2)

OA1G_, OA3G_

	AC15			DC12		DC13
Ue /[V]	**Ie/[A]**	**Ue/[V]**	**Ie/[A]**	**P/[W]**	**Ie/[A]**	**P/[W]**
230	6	**24**	10	240	2	48
400	4	**72**	4	288	0.8	58
690	2	**125**	2	250	0.55	69
		250	0.55	138	0.27	68
		440	0.1	44		

OA4_

EN61058-1	
U_i /[V]	400
I_{th} /[A]	10
I_e	400V AC
	10 (4) A, 10E3
	6 (2,5) A, 50E3
NEMA	10 A, 125-250V AC, 1/4 HP
M3 Screw connection	

MCB_

IEC60947-5-1				
U_i /[V]	690			
I_{th} /[A]	10			
		AC12	**AC15**	**DC13**
I_e /[A]	24V	10	8	5
	110V	10	8	1.1
	220/240V	10	6	0.55
	250V		4	0.55
	380/415V		4	
	660/690V		2	
NEMA	A600, 10A, 600VAC			

Ordering information
Accessories

OSP
S02023A



Fourth poles

Snap-on mounting to the side of the switch (not suitable for OSM-types).

Suitable for 3-pole switches	Mounting side	Type	Order number	Units/ type [pcs]	Weight/ unit [kg]
Fusible 4. poles					
OS100GB...160GB	Left/right	OSP160GB	1SCA114769R1001	1	0.45
OS125GD...160GD	Left/right	OSP160GD	1SCA114768R1001	1	0.45
OS200B	Left/right	OSP200B	1SCA022735R9180	1	1.20
OS200D	Left/right	OSP200D	1SCA022735R8960	1	1.20
OS250B	Left/right	OSP250B	1SCA022770R4030	1	1.20
OS250D	Left/right	OSP250D	1SCA022735R9340	1	1.20
OS315B...400B	Left/right	OSP400B	1SCA022770R3140	1	2.00
OS400D	Left/right	OSP400D	1SCA022770R3220	1	2.00
OS630...800D	Left/right	OSP800D	1SCA100433R1001	1	4.20
OS630...800B	Left/right	OSP800B	1SCA100434R1001	1	4.20
OS1250D	Left/right	OSP1250D	1SCA107946R1001	1	7.20
OS1250DA	Left/right	OSP1250DA	1SCA112402R1001	1	7.20
OS1250B	Left/right	OSP1250B	1SCA107950R1001	1	7.20
Switched 4. poles					
OS100G...160G	Left/right	OSP160GN	1SCA114770R1001	1	0.45
OS200_	Left/right	OSP200N	1SCA022735R8700	1	1.20
OS250_	Left/right	OSP250N	1SCA022735R9260	1	1.20
OS400_	Left/right	OSP400N	1SCA022770R3490	1	1.20
OS630...800	Left/right	OSP800N	1SCA100432R1001	1	4.40
OS1200...1250	Left/right	OSP1250N	1SCA107943R1001	1	7.20

Ordering information
Accessories

OSZ1, 2
S00968A



OESAZX171
S00542A



OXN_
S01918A



OESAZX_
S01994A



Neutral links

Max. wire	H/W/D [mm]	Mounting holes	Type	Order number	Units/ type [pcs]	Weight/ unit [kg]
For OS Mini						
Detachable, mounting on the side of the switch, on the mounting plate or DIN-rail.						
16 mm² Cu	39/41/40	ø 4.2, distance 32	OESAZX171	1SCA022197R2580	1	0.15
For OS/OSM 32G...160G						
Detachable, mounting onto the base plate or DIN-rail.						
16 mm² Cu	39/41/40	ø 4.2, distance 32	OSZ1	1SCA022481R3710	1	0.06
35 mm² Cu	39/44/45	ø 4.2, distance 35	OSZ2	1SCA022481R3800	1	0.07
For OS/OSM 100G...1250						
Mounting with screws (included) onto either side of the switch (OXN250 to OS200...250) or on the base plate (OXN250...1250) according the table below.						
Detachable, mounting on the switch						
OS200...250			OXN250	1SCA022752R9950	1	0.40
Detachable, mounting on the base plate						
OS/OSM32G...250			OXN250	1SCA022752R9950	1	0.40
OS/OSM315...400			OXN400	1SCA022770R3060	1	0.70
OS/OSM630...800			OXN800S	1SCA022831R4880	1	1.20
OS/OSM1250			OXN1250S	1SCA104163R1001	1	2.50

Mounting separately to the base plate

I_{th} [A]	Terminal size (WxD) [mm]	Bolt size	Type	Order number	Units/ type [pcs]	Weight/ unit [kg]
250	12x3	M6	OESAZX162	1SCA022193R0400	1	0.12
315	20x3	M8	OESAZX164	1SCA022202R9520	1	0.10
400	25x4	M10	OESAZX165	1SCA022202R9790	1	0.12
1000	40x5	M12	OESAZX160	1SCA022186R3960	1	1.00

Ordering information
Accessories

OFAW00
S00955A



OESAZG5,OESAZS36
OESAZK98, OESAZL79
S01042A

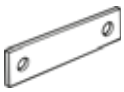

OTVS_
S07017



PB_



PB100
KE00101



PB200
KE00102

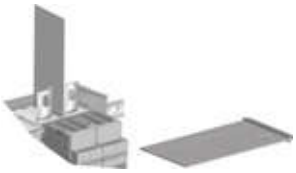

Solid links

Suitable for	Type	Order number	Units/ type [pcs]	Weight/ unit [kg]
OS20FB...OS 32FB_A1	OESAZG98	1SCA022354R9650	1	0.01
OS32GD...OS160GD	OFAW00	1SCA022003R9680	1	0.08
OS32FB_A2...OS63GB	OESAZG5	1SCA022057R1380	1	0.02
OS100GB...OS160GB	OESAZS36	1SCA022044R4600	1	0.02
OS100GJ	OESAZS175	1SCA022354R9570	1	0.03
OS200…250B, J	OEZNL1	1SCA022723R7400	1	0.19
OS315...400B, J[1)]	OESAZK98	1SCA022067R7370	1	0.24
OS630 B...800 B	OESAZL79	1SCA022067R7110	1	0.64
OS600J, 800…1200L	OEZNL8	1SCA113998R1001	1	0.58
OS1250B	OEZNL10	1SCA116437R1001	1	0.60
OS250 D	OFAW1	1SCA022003R9760	1	0.15
OS400 D	OFAW2	1SCA022003R9840	1	0.24
OS630/800 D	OFAW3	1SCA022003R9920	1	0.28

[1)] For OS400J fixing bolts and washers (M8) shall be ordered separately, type FLHSUM8x16-KB/41, two required.

Handle and spare fuse storage clip for OSM

Handle and two spare fuses (for motor operator) can be stored on the OTVS_. OTVS_ can be installed on the left side of the motorized switch-fuse OSM_. Snap-on mounting, no tools required. On OSM1250, the size of the handle prevents the installation onto the switch frame. However, the handle clip can be separately installed on the panel frame and the fuse holder clip onto the switch frame.

Suitable for	Type	Order number	Units/ type [pcs]	Weight/ unit [kg]
OSM32G...250	OTVS1	1SCA111413R1001	1	0.02
OSM315...1250	OTVS2	1SCA111414R1001	1	0.04

Phase barriers

The phase barriers designed for ABB Tmax T4-T5 MCCB's can also be used for OS200…400 switch fuses. 3-pole switch fuses need 4 barriers and 4-pole switch fuses need 6 barriers for full protection. Cutting width of the phase barrier 55mm.

Suitable for switches	No. of poles	Height h [mm]	Type	Order number	Units/ type [pcs]	Weight/ unit [kg]
OS125G...160G_LR, OS200B/D, OS250	3	100	PB100 low	1SDA054970R1	4	
OS125G...160G_LR, OS200B/D, OS250	4	100	PB100 low	1SDA054971R1	6	
OS315, OS400	3	200	PB200 high	1SDA054972R1	4	
OS315, OS400	4	200	PB200 high	1SDA054973R1	6	

Ordering information
Accessories

OSS_L
S01638A



OSS_S
S01637A



OSS800_1L
KE00039



OSS800_1S
KE00038



Terminal shrouds

Suitable for switches	Description	Type	Order number	Units/ type [pcs]	Weight/ unit [kg]
Pack of single pole terminal shrouds					
Snap-on mounting, grey plastic, IP 3X from front. Transparent shrouds available on request.					
OS/OSM100G…160G	Long type	OSS160GG1L/3	1SCA114764R1001	3	0.08
OS/OSM100G…160G	Short type	OSS160GG1S/3	1SCA114766R1001	3	0.05
OS/OSM100G…160G	Long type	OSS160GG1L/4	1SCA114765R1001	4	0.11
OS/OSM100G…160G	Short type	OSS160GG1S/4	1SCA114767R1001	4	0.07
OS/OSM200	Long type	OSS200G1L/3	1SCA022731R8910	3	0.09
OS/OSM200	Short type	OSS200G1S/3	1SCA022732R0130	3	0.06
OS/OSM200	Long type	OSS200G1L/4	1SCA022731R9040	4	0.12
OS/OSM200	Short type	OSS200G1S/4	1SCA022732R0050	4	0.08
OS/OSM250	Long type	OSS250G1L/3	1SCA022731R9390	3	0.09
OS/OSM250	Short type	OSS250G1S/3	1SCA022731R9550	3	0.06
OS/OSM250	Long type	OSS250G1L/4	1SCA022731R9470	4	0.12
OS/OSM250	Short type	OSS250G1S/4	1SCA022731R9630	4	0.08
OS/OSM315...400	Long type	OSS400G1L/3	1SCA022776R6650	3	0.18
OS/OSM315...400	Short type	OSS400G1S/3	1SCA022776R6900	3	0.10
OS/OSM315...400	Long type	OSS400G1L/4	1SCA022776R6730	4	0.25
OS/OSM315...400	Short type	OSS400G1S/4	1SCA022776R7030	4	0.15
OS/OSM600...800	Long type	OSS800G1L/3	1SCA022776R7200	3	0.53
OS/OSM600...800	Short type	OSS800G1S/3	1SCA022776R7540	3	0.21
OS/OSM600...800	Long type	OSS800G1L/4	1SCA022776R7380	4	0.70
OS/OSM600...800	Short type	OSS800G1S/4	1SCA022776R7460	4	0.28
OS1200...1250/ OSM1250	Long type	OSS1250G1L/3	1SCA107938R1001	3	0.76
OS1200...1250/ OSM1250	Short type	OSS1250G1S/3	1SCA107939R1001	3	0.40
OS1200...1250/ OSM1250	Long type	OSS1250G1L/4	1SCA107940R1001	4	1.00
OS1200...1250/ OSM1250	Short type	OSS1250G1S/4	1SCA107941R1001	4	0.52
Terminal shrouds suitable for mechanisms with detachable integrated neutral (N3 versions)					
OS/OSM100G…250_N3_	Long type	OTS250G1L	1SCA022715R5340	1	0.03
OS/OSM100G…250_N3_	Short type	OTS250G1S	1SCA022715R5260	1	0.02
OS/OSM315…400_N3_	Long type	OSS250G1L	1SCA022727R5080	1	0.03
OS/OSM315…400_N3_	Short type	OSS250G1S	1SCA022727R4940	1	0.02
OS/OSM630…800_N3_	Long type	OTS800G1L	1SCA022776R7710	1	0.10
OS/OSM630…800_N3_	Short type	OTS800G1S	1SCA022776R8010	1	0.06
OS1200…1250/OSM1250_N3_	Long type	OTS1600G1L	1SCA106134R1001	1	0.20
OS1200…1250/OSM1250_N3_	Short type	OTS1600G1S	1SCA102667R1001	1	0.12
Single pole terminal shroud for the fourth pole side terminals (LR-types)					
IP20, snap-on mounting, grey plastic.					
OS250_LR	Short type	OSS250G1SH/1	1SCA103500R1001	1	0.003
OS400_LR	Short type	OSS400G1SH/1	1SCA103503R1001	1	0.003

Ordering information
Accessories

OSS_G3_
S01202A



Terminal shrouds

Three and four pole terminal shrouds for side terminals (LR types)

IP20. Snap-on mounting, grey plastic.

Suitable for switches	No. of poles	Remarks	Type	Order number	Units/ type [pcs]	Weight/ unit [kg]
OS100G...160G_LR	3	Long type	OSS160GG3LS	1SCA121570R1001	1	0.01
OS100G...160G_LR	4	Long type	OSS160GG4LS	1SCA121571R1001	1	0.01
OS200...400_	3	Short type	OSS400G3SS	1SCA100390R1001	1	0.01
OS200...400_	3	Long type	OSS400G3LS	1SCA100396R1001	1	0.01
OS200...400_	4	Left side, short	OSS400G4SSL	1SCA100392R1001	1	0.01
OS200...400_	4	Left side, long	OSS400G4LSL	1SCA100398R1001	1	0.01
OS200...400_	4	Right side, short	OSS400G4SSR	1SCA100394R1001	1	0.01
OS200...400_	4	Right side, long	OSS400G4LSR	1SCA100400R1001	1	0.01

OZXB2K
S00215A S00216A

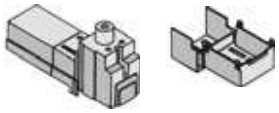

OZXB3K
S00217A S00220A
S00218A S00219A

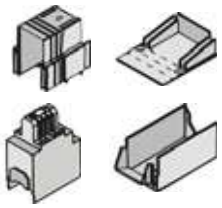

Single pole terminal shroud for terminal clamps

Snap-on mounting, transparent plastic, IP 2X.

Suitable for terminal clamps	Type	Order number	Units/ type [pcs]	Weight/ unit [kg]
OZXB2, 2L	OZXB2K	1SCA022264R0010	1	0.06
OZXB2, 2L	OZXB2K/1	1SCA022644R6700	1	0.02
OZXB3, 4	OZXB3K	1SCA022264R0440	1	0.18
OZXB3, 4	OZXB3K/1	1SCA022644R6880	1	0.06
OZXB5, 6	OZXB4K	1SCA022199R2850	1	0.24
OZXB5, 6	OZXB4K/1	1SCA022644R6960	1	0.08
OZXB7, 7L	OZXB5K	1SCA022283R8040	1	0.15
OZXB7, 7L	OZXB5K/1	1SCA022644R7000	1	0.05

OZXB4K
S00221A S00222A

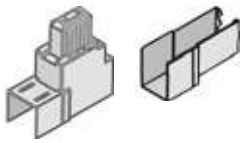

OZXB5K
S00223A S00224A

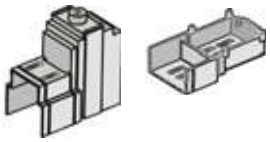

Terminal angle for side terminals (LR types)

Terminal angle extension bar for cable connections in upper or lower position.
Including terminal bolts M10x30.

Suitable for switches	Type	Order number	Units/ type [pcs]	Weight/ unit [kg]
OS100G...160G_LR, 3-pole	OEZXU68/3	1SCA121380R1001	3	
OS100G...160G_LR, 4-pole	OEZXU68/4	1SCA121379R1001	4	
OS200...400_LR	OEZXU14/3	1SCA100361R1001	3	0.24
OS200...400_LR	OEZXU14/4	1SCA101082R1001	4	0.32

OEZXU14
KE00098



Ordering information
Accessories

OZXT1
S00738A



OZXB1L
S00177A



OZXB2
S00179A



OZXB2L, 7L
S00182A



OZXB8, 9
S01806A



OZXB3, 5
S00186A



OZXB4, 6
S00188A



OZXB17
KE00099



Terminal clamp sets for Al- and Cu-cables

Suitable for switches	Cable cross section [mm²]	Type	Order number	Units/ type [pcs]	Weight/ unit [kg]
Insulated versions					
OS/OSM32G…63G	16…50 Al, 2.5…50 Cu	OZXT1	1SCA022469R6310	3	0.05
OS/OSM32G…63G	16…50 Al, 2.5…50 Cu	OZXT1/1	1SCA022469R6490	1	0.02

OZXB-type Al/Cu connectors made of stainless steel

Suitable for switches	Cable cross section [mm²]	Suitable shroud	Type	Order number	Units/ type [pcs]	Weight/ unit [kg]
OS/OSM100G…160G[1)]	10…70	OSS160G_	OZXB1L	1SCA022169R2030	3	0.15
OS/OSM100G…160G[1)]	10…70	OSS160G_	OZXB1L/1	1SCA022194R0030	1	0.05
OS/OSM100G…160G[1)]	95…185	OSS160G_	OZXB8	1SCA022744R1510	3	0.50
OS/OSM100G…160G[1)]	95…185	OSS160G_	OZXB8/1	1SCA022744R1600	1	0.17
OS/OSM200	10…70	OSS200_L	OZXB1L	1SCA022169R2030	3	0.15
OS/OSM200	10…70	OSS200_L	OZXB1L/1	1SCA022194R0030	1	0.05
OS/OSM200	25…120	OZXB2K	OZXB2	1SCA022119R7610	3	0.34
OS/OSM200	25…120	OZXB2K	OZXB2/1	1SCA022194R0200	1	0.12
OS/OSM200[2)]	25…120	OZXB2K	OZXB2L	1SCA022158R7750	3	0.42
OS/OSM200[2)]	25…120	OZXB2K	OZXB2L/1	1SCA022194R0460	1	0.14
OS/OSM200	95…185	OSS200_L	OZXB8	1SCA022744R1510	3	0.50
OS/OSM200	95…185	OSS200_L	OZXB8/1	1SCA022744R1600	1	0.17
OS200	95…240	OSS200_L	OZXB9	1SCA022750R3210	3	0.50
OS200	95…240	OSS200_L	OZXB9/1	1SCA022750R3300	1	0.17
OSM250	10…70	OSS200_L	OZXB1L	1SCA022169R2030	3	0.15
OSM250	10…70	OSS200_L	OZXB1L/1	1SCA022194R0030	1	0.05
OS/OSM250[2)]	25…120	OZXB2K	OZXB2L	1SCA022158R7750	3	0.42
OS/OSM250[2)]	25…120	OZXB2K	OZXB2L/1	1SCA022194R0460	1	0.14
OS/OSM250[2)]	95…185	OZXB3K	OZXB3	1SCA022136R8100	3	1.30
OS/OSM250[2)]	95…185	OZXB3K	OZXB3/1	1SCA022194R0620	1	0.44
OS/OSM250[2)]	2x(95…185)	OZXB3K	OZXB4	1SCA022137R4760	3	1.70
OS/OSM250[2)]	2x(95…185)	OZXB3K	OZXB4/1	1SCA022194R0890	1	0.57
OS/OSM250[2)]	120…300	OZXB4K	OZXB5	1SCA022137R2470	3	2.30
OS/OSM250[2)]	120…300	OZXB4K	OZXB5/1	1SCA022194R1010	1	0.77
OS/OSM250[2)]	120…240	OZXB5K	OZXB7L	1SCA022185R7130	3	1.20
OS/OSM250[2)]	120…240	OZXB5K	OZXB7L/1	1SCA022194R1600	1	0.40
OS/OSM250[2)]	95…185	OSS250_L	OZXB8	1SCA022744R1510	3	0.50
OS/OSM250[2)]	95…185	OSS250_L	OZXB8/1	1SCA022744R1600	1	0.17
OS250[2)]	95…240	OSS250_L	OZXB9	1SCA022750R3210	3	0.50
OS250[2)]	95…240	OSS250_L	OZXB9/1	1SCA022750R3300	1	0.17
OS200…400_LR_	95…240	OSS400G4LSL	OZXB17	1SCA022859R3230	3	0.53
OS200…400_LR_	95…240	OSS400G4LSL	OZXB17/1	1SCA022859R3150	1	0.17

[1)] Suitable for OS125G...160G_LR -types only with terminal angle OEZXU68
[2)] Suitable for OS250_BB -types, OS200B_LR, for OS250_LR types suitable only with terminal angle OEZXU14

Ordering information
Accessories

OZXB7
S00179A



OZXB2L, 7L
S00182A



OZXB8, 9
S01806A



OZXB3, 5
S00186A



OZXB4, 6
S00188A



Terminal clamp sets for Al- and Cu-cables

Suitable for switches	Cable cross section [mm²]	Suitable shroud	Type	Order number	Units/ type [pcs]	Weight/ unit [kg]
OZXB-type Al/Cu connectors made of stainless steel						
OS/OSM315…400[1)]	25…120	OSS400_L	OZXB2L	1SCA022158R7750	3	0.42
OS/OSM315…400[1)]	25…120	OSS400_L	OZXB2L/1	1SCA022194R0460	1	0.14
OS/OSM315…400[1)]	95…185	OZXB3K	OZXB3	1SCA022136R8100	3	1.30
OS/OSM315…400[1)]	95…185	OZXB3K	OZXB3/1	1SCA022194R0620	1	0.44
OS/OSM315…400[1)]	2x(95…185)	OZXB3K	OZXB4	1SCA022137R4760	3	1.70
OS/OSM315…400[1)]	2x(95…185)	OZXB3K	OZXB4/1	1SCA022194R0890	1	0.57
OS315...400[1)]	120…300	OZXB4K	OZXB5	1SCA022137R2470	3	2.30
OS315...400[1)]	120…300	OZXB4K	OZXB5/1	1SCA022194R1010	1	0.77
OS315...400[1)]	2x(120…300)	OZXB4K	OZXB6	1SCA022137R4920	3	3.03
OS315...400[1)]	2x(120…300)	OZXB4K	OZXB6/1	1SCA022194R1270	1	1.00
OS/OSM315...400[1)]	120…240	OZXB5K	OZXB7	1SCA022185R0040	3	1.00
OS/OSM315…400[1)]	120…240	OZXB5K	OZXB7/1	1SCA022194R1430	1	0.34
OS/OSM315…400[1)]	95…185	OSS400_L	OZXB8	1SCA022744R1510	3	0.50
OS/OSM315…400[1)]	95…185	OSS400_L	OZXB8/1	1SCA022744R1600	1	0.17
OS/OSM315…400[1)]	95…240	OSS400_L	OZXB9	1SCA022750R3210	3	0.50
OS/OSM315…400[1)]	95…240	OSS400_L	OZXB9/1	1SCA022750R3300	1	0.17
OS/OSM630…800	95…185	OSS800_L	OZXB3	1SCA022136R8100	3	1.30
OS/OSM630…800	95…185	OSS800_L	OZXB3/1	1SCA022194R0620	1	0.44
OS/OSM630…800	2x(95…185)	OSS800_L	OZXB4	1SCA022137R4760	3	1.70
OS/OSM630…800	2x(95…185)	OSS800_L	OZXB4/1	1SCA022194R0890	1	0.57
OS/OSM630…800	120…300	OSS800_L	OZXB5	1SCA022137R2470	3	2.30
OS/OSM630…800	120…300	OSS800_L	OZXB5/1	1SCA022194R1010	1	0.77
OS/OSM630…800	2x(120…300)	OSS800_L	OZXB6	1SCA022137R4920	3	3.03
OS/OSM630…800	2x(120…300)	OSS800_L	OZXB6/1	1SCA022194R1270	1	1.00
OS/OSM630…800	120…240	OSS800_L	OZXB7L	1SCA022185R7130	3	1.20
OS/OSM630…800	120…240	OSS800_L	OZXB7L/1	1SCA022194R1600	1	0.40
OS/OSM630…800	95…185	OSS800_L	OZXB8	1SCA022744R1510	3	0.50
OS/OSM630…800	95…185	OSS800_L	OZXB8/1	1SCA022744R1600	1	0.17
OS/OSM630…800	95…240	OSS800_L	OZXB9	1SCA022750R3210	3	0.50
OS/OSM630…800	95…240	OSS800_L	OZXB9/1	1SCA022750R3300	1	0.17

[1)] Suitable for OS315...400_BB_-types, for OS315...400_LR_-types suitable only with terminal angle OEZXU14

Ordering information
Accessories

OZXB3, 5
S00186A



OZXB4, 6
S00188A



OZXB7L
S00182A



OZXB8, 9
S01806A



OZXR240



OZXR2X300



OZXP240



OZXP2X240



Terminal clamp sets for Al- and Cu-cables

Suitable for switches	Cable cross section [mm²]	Suitable shroud	Type	Order number	Units/ type [pcs]	Weight/ unit [kg]
OZXB-type Al/Cu connectors made of stainless steel						
OS/OSM1250	95…185	OTS1600_L	OZXB3	1SCA022136R8100	3	1.30
OS/OSM1250	95…185	OTS1600_L	OZXB3/1	1SCA022194R0620	1	0.44
OS/OSM1250	2x(95…185)	OTS1600_L	OZXB4	1SCA022137R4760	3	1.70
OS/OSM1250	2x(95…185)	OTS1600_L	OZXB4/1	1SCA022194R0890	1	0.57
OS/OSM1250	120…300	OTS1600_L	OZXB5	1SCA022137R2470	3	2.30
OS/OSM1250	120…300	OTS1600_L	OZXB5/1	1SCA022194R1010	1	0.77
OS/OSM1250	2x(120…300)	OTS1600_L	OZXB6	1SCA022137R4920	3	3.03
OS/OSM1250	2x(120…300)	OTS1600_L	OZXB6/1	1SCA022194R1270	1	1.00
OS/OSM1250	120…240	OTS1600_L	OZXB7L	1SCA022185R7130	3	1.20
OS/OSM1250	120…240	OTS1600_L	OZXB7L/1	1SCA022194R1600	1	0.40
OS/OSM1250	95…185	OTS1600_L	OZXB8	1SCA022744R1510	3	0.50
OS/OSM1250	95…185	OTS1600_L	OZXB8/1	1SCA022744R1600	1	0.17
OS/OSM1250	95…240	OTS1600_L	OZXB9	1SCA022750R3210	3	0.50
OS/OSM1250	95…240	OTS1600_L	OZXB9/1	1SCA022750R3300	1	0.17
OZXR type Al/Cu connectors made of stainless steel and copper[2)]						
OS100G…160G[1)]	6…70	OSS160G_L	OZXR70	1SCA115529R1001	3	0.15
OS100G…160G[1)]	25…95	OSS160G_L	OZXR95	1SCA115530R1001	3	0.21
OS200	25…95	OSS200_L	OZXR95	1SCA115530R1001	3	0.21
OS200	95…185	OSS200_L	OZXR185	1SCA115531R1001	3	0.45
OS200	2x(95…185)	-	OZXR2X185	1SCA115534R1001	3	0.66
OS250	95…185	OSS250_L	OZXR185	1SCA115531R1001	3	0.45
OS250	2x(95…185)	-	OZXR2X185	1SCA115534R1001	3	0.66
OS315…400	95…240	OSS400_L	OZXR240	1SCA115532R1001	3	0.42
OS315…400	2x(95…185)	-	OZXR2X185	1SCA115534R1001	3	0.66
OS315…400	185…300	-	OZXR300	1SCA115533R1001	3	0.87
OS630…800	2x(185…300)	OSS800_L	OZXR2X300	1SCA115535R1001	3	1.59
OZXP type Al/Cu connectors made of tin plated aluminium profile[2)]						
OS100G…160G[1)]	6…95	OSS160G_L	OZXP95	1SCA115539R1001	3	0.09
OS200	6…95	OSS200_L	OZXP95	1SCA115539R1001	3	0.09
OS200	16…120	OSS200_L	OZXP120	1SCA115540R1001	3	0.15
OS200	25…150	-	OZXP150	1SCA115541R1001	3	0.18
OS200	35…240	-	OZXP240	1SCA115542R1001	3	0.27
OS250	35…240	-	OZXP240	1SCA115542R1001	3	0.27
OS315…400	35…240	-	OZXP240	1SCA115542R1001	3	0.27
OS315…400	95…300	-	OZXP300	1SCA115543R1001	3	0.42
OS315…400	2x(70…240)	-	OZXP2X240	1SCA115544R1001	3	1.38
OS630…800	2x(70…240)	OSS800_L	OZXP2X240	1SCA115544R1001	3	1.38

[1)] For _LR-types, suitable only with terminal angle OEZXU68
[2)] Suitable also for OS200...400_BB_, for OS200...400_LR_-types suitable only with terminal angle OEZXU14

Ordering information
Accessories

OW_6DS_
S00538A

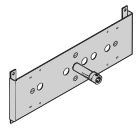

Conversion kits for front operated combination switches

Suitable for switches	Switches needed [pcs]	Shaft distance [mm]	Type	Order number	Units/ type [pcs]	Weight/ unit [kg]
6 and 8-pole switch mechanism						
Parallel attachment for connecting 3- and 4-pole switches. The switches work simultaneously.						
6-pole switches, OS Mini						
OS Mini	Two 3-pole		OWP6DS1	1SCA105255R1001	1	0.69
8-pole switches, OS Mini						
OS Mini	Two 4-pole		OWP6DS2	1SCA105256R1001	1	0.69
6 and 8-pole switches, OS32G...400						
The attachment levers are provided with holes, enabling different shaft distances.						
The combination switches can be mounted either horizontally or vertically.						
OS32G...250	Two 3- or 4-pole	45+(0-13)x15	OESAZW2	1SCA022078R1600	1	0.37
OS315...400	Two 3- or 4-pole	60+(0-19)x20	OETLZW9	1SCA022061R3300	1	1.1
Change-over switch mechanism						
Two switches connected with a mechanism operating into I-O-II positions.						
OS Mini	Two 3-pole		OWC6DSH1	1SCA105251R1001	1	1.0
OS Mini	Two 4-pole		OWC6DSH2	1SCA105252R1001	1	1.0
OS32G...250	Two 3- or 4-pole	210+(0 - 18)x20	OTZW25	1SCA022778R6920	1	2.8
OS315...400	Two 3- or 4-pole	210+(0 - 11)x20	OETLZW11	1SCA022078R0030	1	3.0
OS315...400	Two 3- or 4-pole	210+(0 - 20)x20	OETLZW12	1SCA022078R0200	1	4.6
Bypass switch mechanism						
A combination of two switches in parallel with a third switch for change-over operation to bypass, for example, a breaker for maintenance. The bypass attachment can be used together with another combination attachment.						
OS32G...250	Three 3- or 4-pole		OTZW26	1SCA022778R7060	1	3.3
	Between 1 and 2:	210+(0 - 9)x20				
	Between 1 and 3:	250+(0 - 9)x20				
OS315...400	Three 3- or 4-pole		OETLZW13	1SCA022078R0460	1	4.0
	Between 1 and 2:	210+(0 - 18)x20				
	Between 1 and 3:	250+(0 - 18)x20				
Mechanical interlock mechanism						
Prevents one switch from closing to ON -position, if the other is not in OFF - position. OTZW/OETLZW-types: When mounted upside down, prevents one switch from opening to OFF-position, if the other is not in the ON-position. (UPS-usage, make-before-break)						
OS Mini	Two 3-pole		OWM6DS1	1SCA105253R1001	1	0.30
OS Mini	Two 4-pole		OWM6DS2	1SCA105254R1001		0.30
OS32G...250	Two 3- or 4-pole	190	OTZW10	1SCA022431R5280	1	0.40
OS315...800	Two 3- or 4-pole	250	OETLZW14	1SCA022077R3410	1	0.70
OS315...800	Two 3- or 4-pole	300	OETLZW3	1SCA022049R0380	1	0.80
OS315...1250	Two 3- or 4-pole	500	OETLZW15	1SCA022081R9340	1	1.24

OESAZW2
S01246A



OETLZW9
S00739A



OTZW25, OETLZW11
S00054B



OETLZW12
S00055A



OTZW26
S00058B



OETLZW13
S00056A

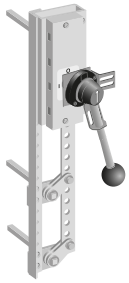

OTZW10
S00938A

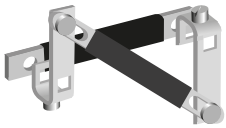

OETLZW3, 14, 15
S00053A

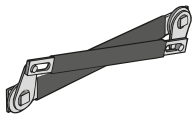

Ordering information
Accessories

Change-over switches
S01233A

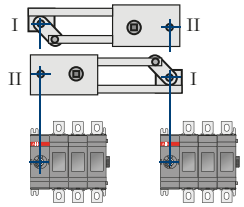

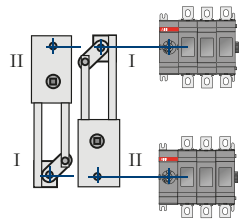

Change-over and bypass switches
S01233A

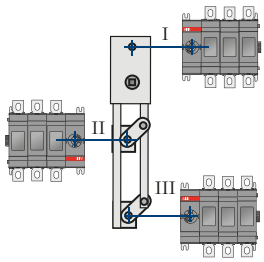

The shafts and handles for conversion kits

Conversion kit type	To be ordered separately: Shaft	To be ordered separately: Handle	Included in the conversion kit delivery: Shaft	Included in the conversion kit delivery: Handle	The standard handle or shaft of one of the combined switches can be used: Shaft	The standard handle or shaft of one of the combined switches can be used: Handle
6 and 8-pole switches						
OWP6DS1	x	-	-	-	-	x
OWP6DS2	x	-	-	-	-	x
OESAZW2	-	-	x (2 pcs)	OHB145J12	-	-
OETLZW9	-	-	-	-	x	x
Change-over switches						
OWC6DSH1	x (length min. 170mm)	-	-	OHB65J6E011	-	-
OWC6DSH2	x (length min. 170mm)	-	-	OHB65J6E011	-	-
OTZW25	-	-	x (2 pcs)	OHB95J12E011	-	-
OETLZW11	-	-	x (2 pcs)	OHB145J12E011	-	-
OETLZW12	-	-	x (2 pcs)	YASDA21	-	-
Bypass switches						
OTZW26	-	-	x (3 pcs)	OHB95J12E011	-	-
OETLZW13	-	-	x (3 pcs)	YASDA 6	-	-
Mechanical interlock						
OWM6DS1	x (2 pcs, length min. 170mm)	x (2 pcs)	-	-	-	-
OWM6DS2	x (2 pcs, length min. 170mm)	x (2 pcs)	-	-	-	-
OTZW10	-	-	-	-	x	x
OETLZW14	-	-	-	-	x	x
OETLZW3	-	-	-	-	x	x
OETLZW15	-	-	-	-	x	x

Mechanical interlock
S01037A

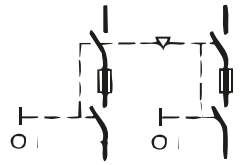

Change-over switches

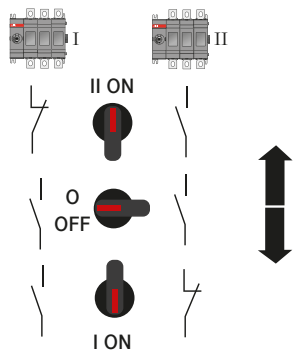

Bypass switches

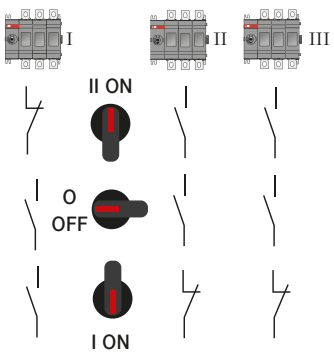

Ordering information
Accessories

OFM_
S00908A

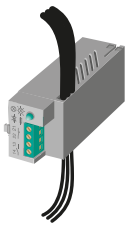

Electronic fuse monitor

Includes the auxiliary contacts 1NO + 1NC. More information, see brochure OFM_OFS20GB.

Rated voltage [V]	Type	Order number	Units/ type [pcs]	Weight/ unit [kg]
OS Mini				
Mounting onto the left side of OS Mini (with a frame OSZ4) or on mounting plate.				
120...260/AC	OFM260	1SCA022459R8560	1	0.14
380...690/AC	OFM690	1SCA022459R8480	1	0.14
OS/OSM32G...1250				
Mounting onto the left side of OS32G-1250 switch fuse (right side of OSM motorized switch fuses) or on DIN-rail or on mounting plate.				
100...260/AC	OFS260	1SCA022716R0180	1	0.16
380...690/AC	OFS690	1SCA022715R9920	1	0.16
48...110/DC	OFD110EA	1SCA121775R1001	1	0.155
110...500/DC	OFD500EA	1SCA121776R1001	1	0.155

OFS_
S01982A



OFD_EA
S07189



Mounting accessories for fuse monitor

Suitable for switches	Flat terminal size [mm]	Type	Order number	Units/ type [pcs]	Weight /unit [kg]
Crimp terminals					
OS_	2.8 - 0.8	OFMZX2	1SCA022475R9910	6	0.01
Mounting frame for OS Mini					
Mounting on the left side of the switch		OSZ4	1SCA022530R0200	1	0.60

OFMZX2
S00954A



OSZ4
S01163B

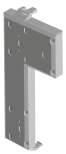

Ordering information
Accessories

OSD25
S00543A

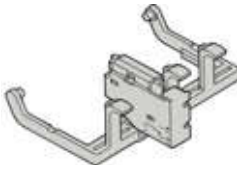

OSZX_
S02206A



Blown fuse indicators (DPMM)

Striker type fuse is needed. See the dimensions in IEC60269-2-1, Section 1A.

Suitable for switches	Type	Order number	Units/ type [pcs]	Weight/ unit [kg]
OS Mini				
Auxiliary contact (1x C/O) included. See the ratings on page 63, type OA4				
for 3-pole switches	OSD25P3	1SCA022192R9060	1	0.10
for 4-pole switches, fused neutral	OSD25P4	1SCA022196R9520	1	0.10
OS/OSM50GF_				
Auxiliary contacts (3 x C/O in 3-pole, 4 x C/O in 4-pole) included. Ratings: Ith: 5A, AC15: 0.15A/250VAC. NEMA 5A, 125-250 VAC, 1/10 HP				
for 3-pole switches	OSGD50P3	1SCA116401R1001	1	0.015
for 4-pole switches, fused neutral	OSGD50P4	1SCA115689R1001	1	0.020
OS/OSM125GF_				
Auxiliary contacts (3 x C/O in 3-pole, 4 x C/O in 4-pole) included. Ratings: Ith: 5A, AC15: 0.15A/250VAC. NEMA 5A, 125-250 VAC, 1/10 HP				
for 3-pole switches	OSGD125P3	1SCA115690R1001	1	0.025
for 4-pole switches, fused neutral	OSGD125P4	1SCA115692R1001	1	0.035
OS/OSM250D...800D				
Auxiliary contacts (3xNO + 3xNC in 3-pole and 4xNO + 4xNC in 4-pole) included. See the ratings on page 63, type OA1G_, OA3G_				
for 3-pole switches	OSZX3	1SCA101224R1001	1	0.15
for 4-pole switches, fused neutral	OSZX4	1SCA101225R1001	1	0.20

Ordering information
Accessories

OETLZW5
S00059A

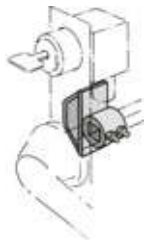

Cam attachment

For Castell, Lowe & Fletcher and Ronis interlock. Cam attachment for adapting the switches to the interlock system. The interlock is not included.

Suitable for switches	Type	Order number	Units/ type [pcs]	Weight /unit [kg]
OS16...250	OETLZW16	1SCA022095R2070	1	0.17
OS315...1250	OETLZW5	1SCA022052R3900	1	0.14

OSZT1_
S04001



Mechanism interlock kits and Electrical interlocks

OS32G…1250 switch fuses can be interlocked in the OFF position using padlocks and by using a mechanical interlock kit mounted on the mechanism. The diameter of the lock bail can be max 8 mm.
Note: The shaft must go through the interlock into the switch mechanism.

OSZT2...4_
S04003



Suitable for switches	Type	Order number	Units/ type [pcs]	Weight /unit [kg]
Interlocking in the OFF position				
OS32G...160G	OTZT1A	1SCA106522R1001	1	0.21
OS200 ... 250_	OSZT1A	1SCA106532R1001	1	0.32
OS315 ... 400_	OSZT2A	1SCA106534R1001	1	0.75
OS600 ...800_	OSZT3A	1SCA106535R1001	1	1.20
OS1200 ... 1250_	OSZT4A	1SCA106536R1001	1	2.00
Interlocking in the OFF & ON positions				
OS32G...160G	OTZT1L	1SCA106527R1001	1	0.21
OS200 ... 250_	OSZT1L	1SCA106538R1001	1	0.32
OS315 ... 400_	OSZT2L	1SCA106539R1001	1	0.75
OS600 ...800_	OSZT3L	1SCA106540R1001	1	1.20
OS1200 ... 1250_	OSZT4L	1SCA106541R1001	1	2.00

Ordering information
Accessories

PDAL2_
S04005



PSGZD1
S07005



Coils

By installing a coil inside the housing of the interlock kit the switch can be interlocked electrically in the OFF position or both in the OFF and ON positions. The electrical interlock works using the “closed circuit principle”, meaning that when the control voltage is not connected to the coil, the switches provided with A-type interlocks cannot be turned to the ON position and switches with L-type interlocks cannot be turned to the ON or OFF positions.

Suitable for switches	Type	Order number	Units/ type [pcs]	Weight /unit [kg]
AC coils				
24 VAC, 60 Hz	PDAL2/24AC60Hz	1SCA111350R1001	1	0.15
110 VAC, 50Hz	PDAL2/110AC50Hz	1SCA106543R1001	1	0.15
110 VAC, 60Hz	PDAL2/110AC60Hz	1SCA107100R1001	1	0.15
120 VAC, 60 Hz	PDAL2/120AC60Hz	1SCA111353R1001	1	0.15
208 VAC, 60Hz	PDAL2/208AC60Hz	1SCA107101R1001	1	0.15
230 VAC, 50Hz	PDAL2/230AC50Hz	1SCA107102R1001	1	0.15
240 VAC, 60 Hz	PDAL2/240AC60Hz	1SCA111356R1001	1	0.15
DC coils				
24 VDC	PDAL2/24DC	1SCA106542R1001	1	0.15
48 VDC	PDAL2/48DC	1SCA107103R1001	1	0.15
60 VDC	PDAL2/60DC	1SCA107104R1001	1	0.15
110 VDC	PDAL2/110DC	1SCA107105R1001	1	0.15
125 VDC	PDAL2/125DC	1SCA111338R1001	1	0.15
220 VDC	PDAL2/220DC	1SCA112503R1001	1	0.15

Technical data for the coil

Operating voltage		U=0.7...1.1 x Un
Operating ambient temperature		-40°C...+65°C
Power consumption	with AC	6.5 W
	with DC	9 VA

Mounting accessories

DIN-rail mounting kit

For mounting a switch fuse into 35 mm DIN-rail

Suitable for switches	Type	Order number	Units/ type [pcs]	Weight /unit [kg]
OS32G...160G, 1 - 4 -pole	OSGZD1	1SCA115688R1001	1	0.20

Dimension drawings
Front operated switch fuses

OS Mini

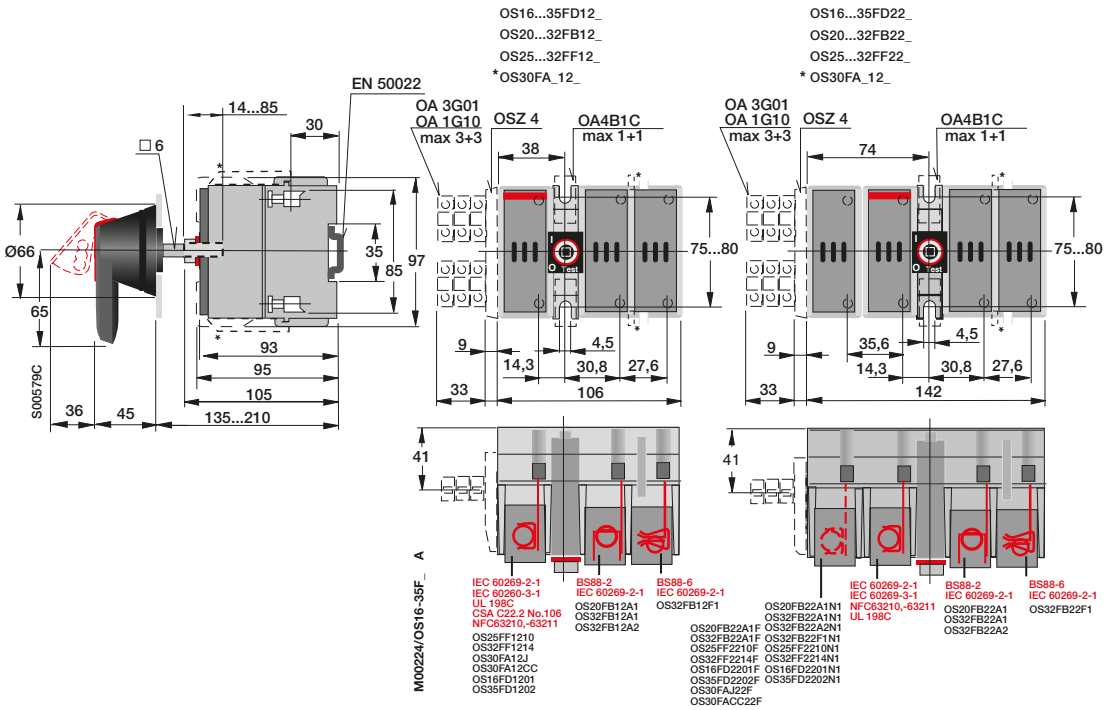

OS40 Mini

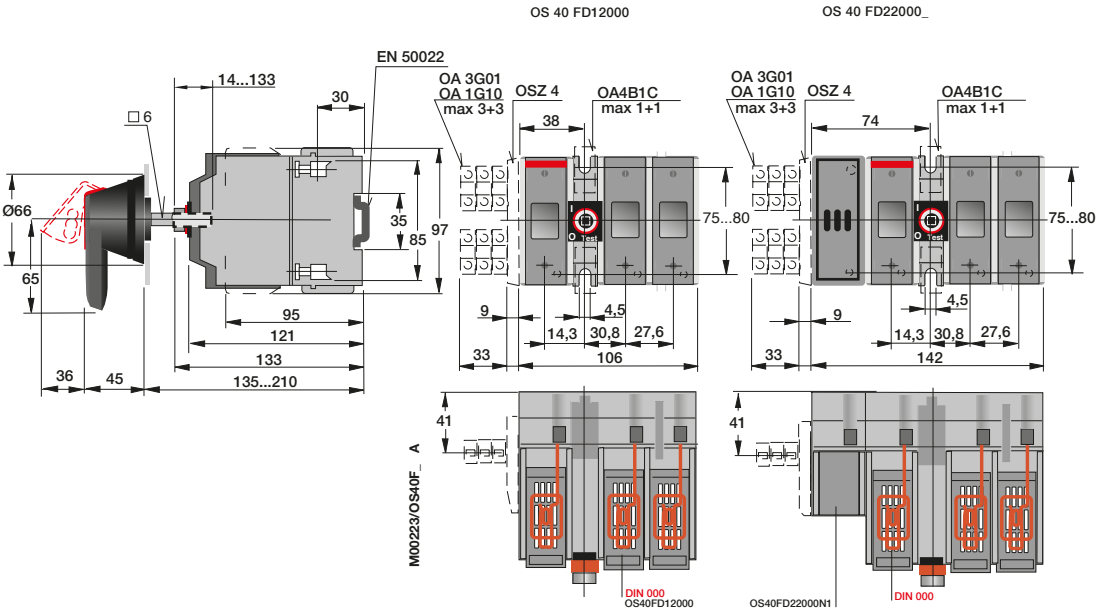

Dimension drawings
Front operated switch fuses

OS32...63G_P

Mechanism at the end of the switch fuse

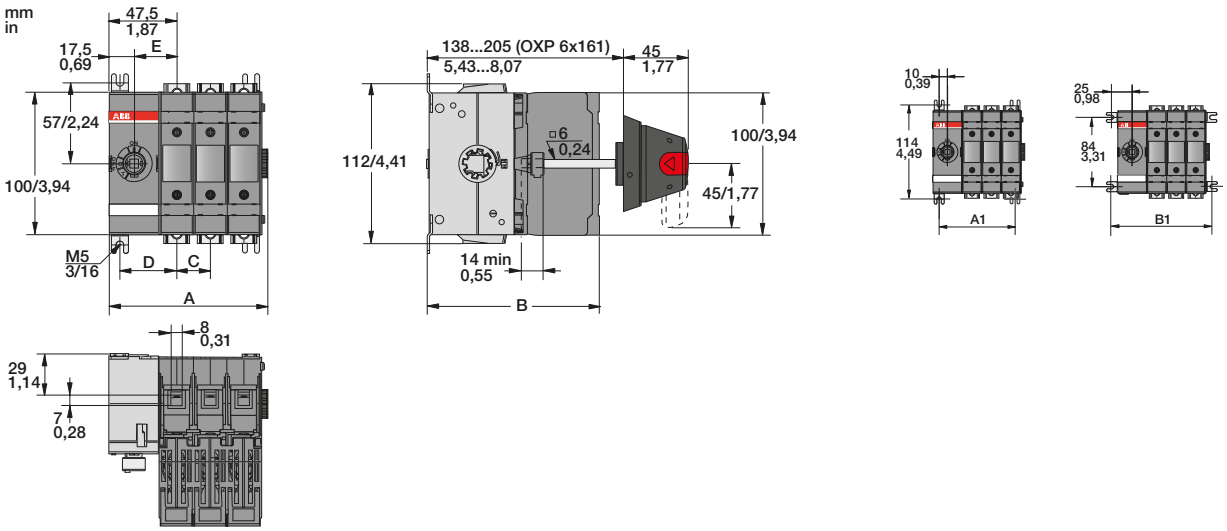

M00287/OS32-63G_01-04 B

OS32-63GD				
[mm]	D01	D02	D03	D04
A	64,5	88	111,5	135,5
B	120,5	120,5	120,5	120,5
C	-	23,5	23,5	23,5
D	40	40	40	40
E	30	30	30	30
A1	45	68,5	92	111,5
B1	75	98,5	122	145,5

OS32-63GB/F				
[mm]	B/F01	B/F02	B/F03	B/F04
A	64,5	88	111,5	135,5
B	108,5	108,5	108,5	108,5
C	-	23,5	23,5	23,5
D	40	40	40	40
E	30	30	30	30
A1	45	68,5	92	111,5
B1	75	98,5	122	145,5

OS60GJ				
[mm/in]	J01	J02	J03	J04
A	74,5/2,93	109,5/4,31	144,5/5,69	179,5/7,07
B	118/4,65	118/4,65	118/4,65	118/4,65
C	-	35/1,38	35/1,38	35/1,38
D	45,5/1,79	45,5/1,79	45,5/1,79	45,5/1,79
E	36/1,41	36/1,41	36/1,41	36/1,41
A1	51/2,01	86/3,39	121/4,76	156/6,14
B1	81/3,19	116/4,57	151/5,94	186/7,32

Mechanism between the poles

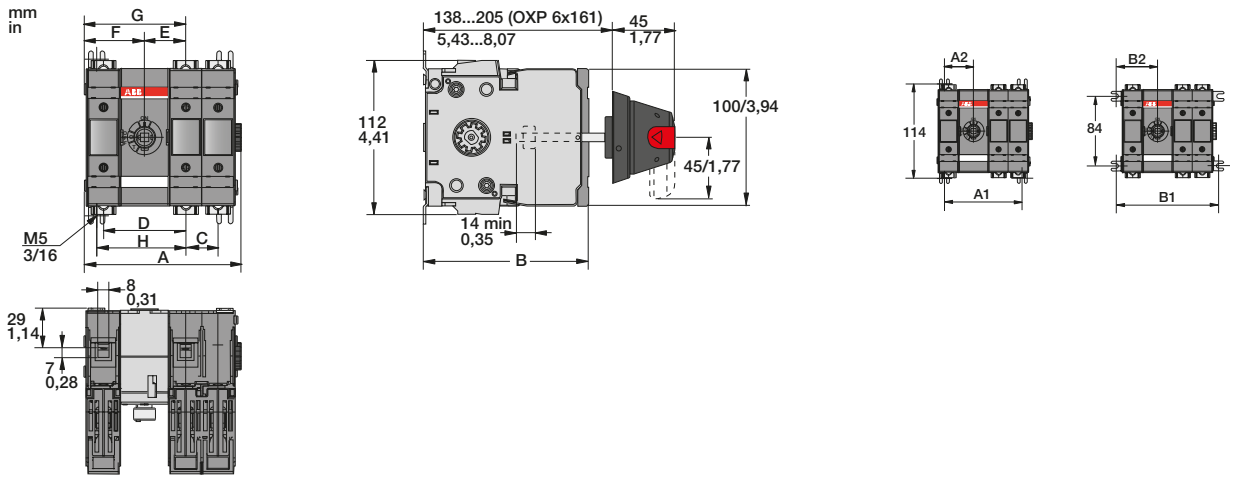

M00288/OS32-63G_11-22 B

OS32-63GD				
[mm]	D11	D12	D13	D22
A	91	114,5	138	138
B	120,5	120,5	120,5	120,5
C	-	23,5	23,5	23,5
D	60	60	60	60
E	30	30	30	30
F	44	44	44	67,5
G	74	74	74	97,5
A1	70	93,5	117	117
A2	35	35	35	58,5
B1	75	123,5	147	147
B2	50	50	50	73,5

OS32-63GB/F				
[mm]	B/F11	B/F12	B/F13	B/F22
A	91	114,5	138	138
B	108,5	108,5	108,5	108,5
C	-	23,5	23,5	23,5
D	60	60	60	60
E	30	30	30	30
F	44	44	44	67,5
G	74	74	74	97,5
A1	70	93,5	117	117
A2	35	35	35	58,5
B1	75	123,5	147	147
B2	50	50	50	73,5

OS60GJ				
[mm/in]	J11	J12	J13	J22
A	74,5/2,93	148/5,82	183,5/7,20	179,5/8,58
B	118/4,65	118/4,65	118/4,65	118/4,65
C	-	35/1,38	35/1,38	35/1,38
D	71,5/2,81	71,5/2,81	71,5/2,81	71,5/2,81
E	36/1,41	36/1,41	36/1,41	36/1,41
F	55,5/2,19	55,5/2,19	55,5/2,19	90,5/3,56
G	91,5/3,6	91,5/3,6	91,5/3,6	126,5/4,98
A1	81,5/3,21	116,5/4,59	151,5/5,96	151,5/5,96
A2	40,5/1,59	40,5/1,59	40,5/1,59	75,5/2,97
B1	111,5/4,39	146,5/5,77	181,5/7,15	181,5/7,15
B2	70,5/2,78	70,5/2,78	70,5/2,78	105,5/4,15

Dimension drawings
Front operated switch fuses

OS100...160G_P

Mechanism at the end of the switch fuse

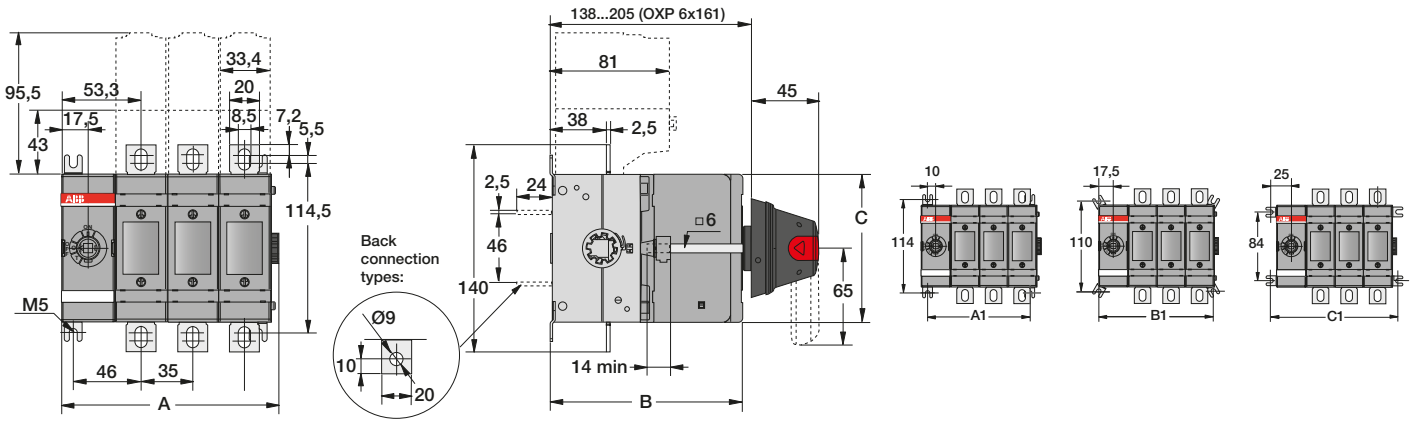

M002289/OS100-160G_01-04 B

OS100-160GD/F				
[mm]	D/F01	D/F02	D/F03	D/F04
A	76,5	111,5	146,5	181,5
B	130	130	130	130
C	100	100	100	100
A1	55	90	125	160
B1	70	105	140	175
C1	85	120	155	190

OS100-160GB				
[mm]	B01	B02	B03	B04
A	76,5	111,5	146,5	181,5
B	114,5	114,5	114,5	114,5
C	118	118	118	118
A1	55	90	125	160
B1	70	105	140	175
C1	85	120	155	190

Mechanism between the poles

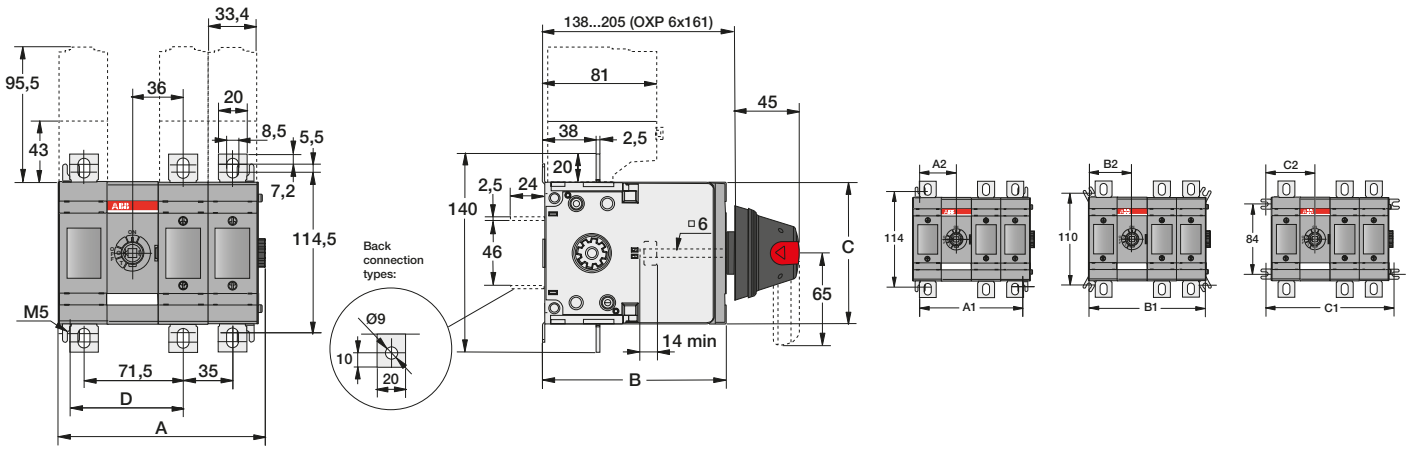

M002290/OS100-160G_11-22 B

OS100-160GD/F				
[mm]	D/F11	D/F12	D/F13	D/F22
A	113	148	183	183
B	130	130	130	130
C	100	100	100	100
D	81	81	81	116
A1	90	125	160	160
A2	45	45	45	80
B1	105	140	175	175
B2	52,5	52,5	52,5	87,5
C1	120	155	190	190
C2	60	60	60	95

OS100-160GB				
[mm]	B11	B12	B13	B22
A	113	148	183	183
B	114,5	114,5	114,5	114,5
C	118	118	118	118
D	81	81	81	116
A1	90	125	160	160
A2	45	45	45	80
B1	105	140	175	175
B2	52,5	52,5	52,5	87,5
C1	120	155	190	190
C2	60	60	60	95

Dimension drawings
Front operated switch fuses

OS200_P and OS250_P

Mechanism at the end of the switch fuse

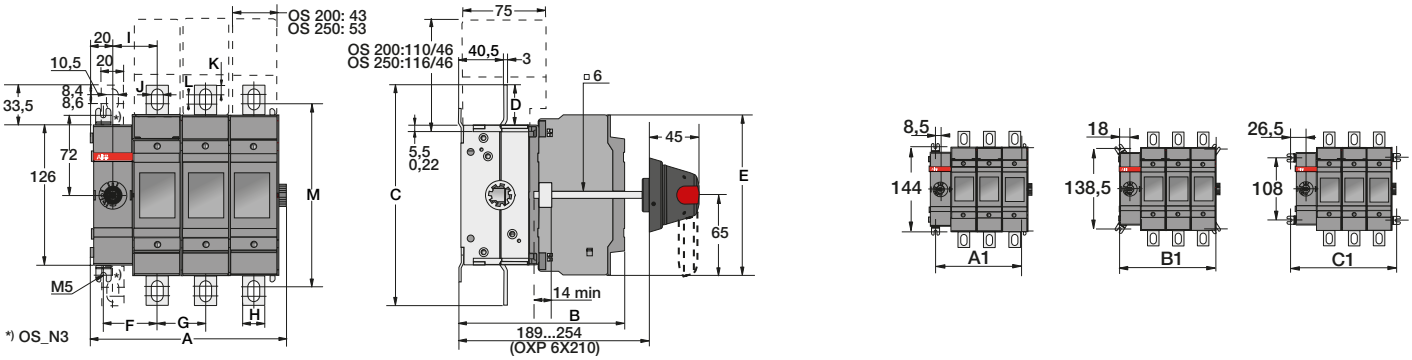

OS200

[mm]	D01	B01	D02	B02	D03	B03	D04	B04
A	89,5	89,5	133	133	176,5	176,5	220	220
B	149	130	149	130	149	130	149	149
C	198,5	198,5	198,5	198,5	198,5	198,5	198,5	198,5
D	36,5	36,5	36,5	36,5	36,5	36,5	36,5	36,5
E	144,5	144,5	144,5	144,5	144,5	144,5	144,5	144,5
F	48,5	48,5	48,5	48,5	48,5	48,5	48,5	48,5
G	-	-	43,5	43,5	43,5	43,5	43,5	43,5
H	20	20	20	20	20	20	20	20
I	40	40	40	40	40	40	40	40
J	10	10	10	10	10	10	10	10
K	8,4	8,4	8,4	8,4	8,4	8,4	8,4	8,4
L	8,6	8,6	8,6	8,6	8,6	8,6	8,6	8,6
M	164,5	164,5	164,5	164,5	164,5	164,5	164,5	164,5
A1	60,5	60,5	104	104	147,5	147,5	191	191
B1	79,5	79,5	123	123	166,5	166,5	210	210
C1	96,5	96,5	140	140	183,5	183,5	227	227

OS250

[mm]	D01/B01	D02/B02	D03/B03	D04/B02
A	99,5	153,5	207,5	261,5
B	154	154	154	154
C	193	193	193	193
D	33,5	33,5	33,5	33,5
E	148,5	148,5	148,5	148,5
F	53,5	53,5	53,5	53,5
G	-	54	54	54
H	25	25	25	25
I	45	45	45	45
J	11	11	11	11
K	11,5	11,5	11,5	11,5
L	4	4	4	4
M	162	162	162	162
A1	70,5	124,5	178,5	232,5
B1	89,5	143,5	197,5	251,5
C1	106,5	160,5	214,5	268,5

M00008/OS200_250_01_04 H

Mechanism between the poles

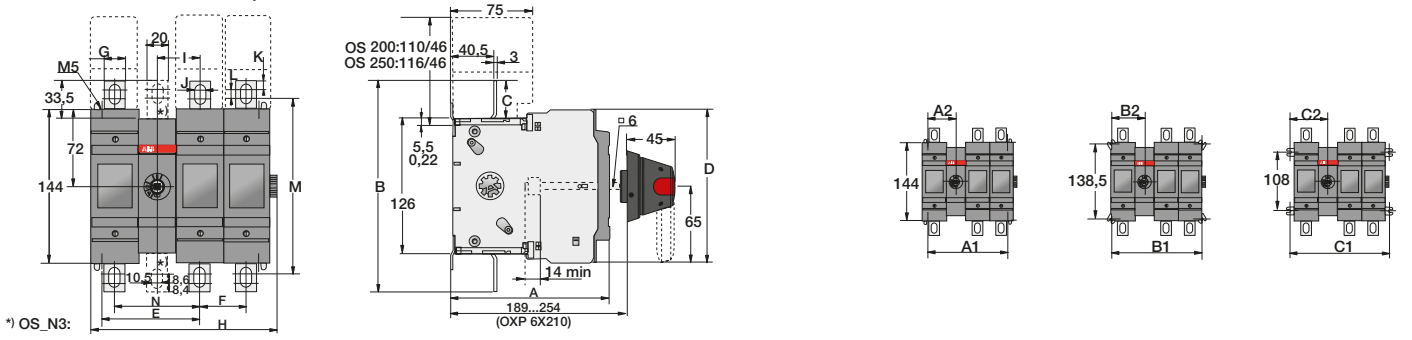

OS200

[mm]	D11	B11	D12	B12	D13	B13	D22	B22
A	149	130	149	130	141	130	149	130
B	199	199	199	199	199	199	199	199
C	36,5	36,5	36,5	36,5	36,5	36,5	36,5	36,5
D	144,5	144,5	144,5	144,5	144,5	144,5	144,5	144,5
E	92	92	92	92	92	92	135,5	135,5
F	43,5	43,5	43,5	43,5	43,5	43,5	43,5	43,5
G	20	20	20	20	20	20	20	20
H	132	132	175,5	175,5	219	219	219	219
I	40	40	40	40	40	40	40	40
J	10	10	10	10	10	10	10	10
K	8,4	8,4	8,4	8,4	8,4	8,4	8,4	8,4
L	8,6	8,6	8,6	8,6	8,6	8,6	8,6	8,6
M	165	165	165	165	165	165	165	165
N	80	80	80	80	80	80	80	80
A1	104	104	147,5	147,5	191	191	191	191
A2	52	52	52	52	52	52	95,5	95,5
B1	123	123	166,5	166,5	210	210	210	210
B2	61,5	61,5	61,5	61,5	61,5	61,5	105	105
C1	140	140	183,5	183,5	227	227	227	227
C2	70	70	70	70	70	70	113,5	113,5

OS250

[mm]	D11	D12	D13	D22
A	154	154	154	154
B	193	193	193	193
C	33,5	33,5	33,5	33,5
D	148,5	148,5	148,5	148,5
E	112,5	112,5	112,5	161
F	54	54	54	54
G	25	25	25	25
H	152	206	260	260
I	45	45	45	45
J	11	11	11	11
K	11,5	11,5	11,5	11,5
L	4	4	4	4
M	162	162	162	162
N	90	90	90	90
A1	124	178	232	232
A2	62	62	62	116
B1	143	197	251	251
B2	71,5	71,5	71,5	125,5
C1	160	214	268	268
C2	80	80	80	134

M00014/OS200_250_11_22 H

Dimension drawings
Front operated switch fuses

OS315_P and OS400_P

Mechanism at the end of the switch fuse

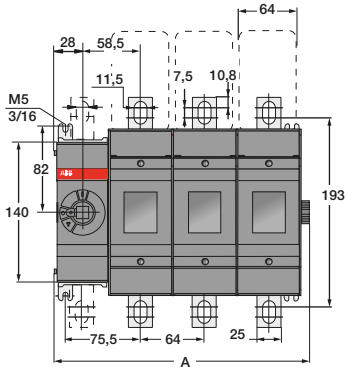

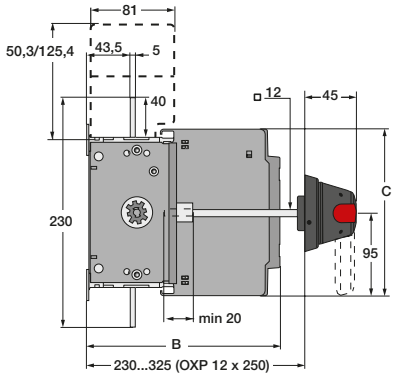

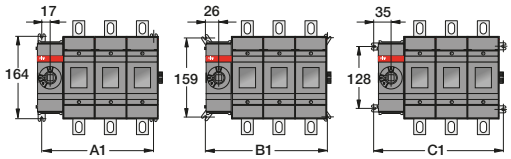

C000014 /OS315_400_001_04 A

OS315				
[mm]	B01	B02	B03	B04
A	127	191	255	319
B	176	176	176	176
C	194	194	194	194

OS400								
[mm]	B01	B02	B03	B04	D01	D02	D03	D04
A	127	191	255	319	127	191	255	319
B	176	176	176	176	193	193	193	193
C	194	194	194	194	166	166	166	166

OS315				
[mm]	B01	B02	B03	B04
A1	98,5	162,5	226,5	290,5
B1	116,5	180,5	244,5	308,5
C1	134,5	198,5	262,5	326,5

OS400				
[mm]	B01/D01	B02/D02	B03/D03	B04/D04
A1	98,5	162,5	226,5	290,5
B1	116,5	180,5	244,5	308,5
C1	134,5	198,5	262,5	326,5

Mechanism between the poles

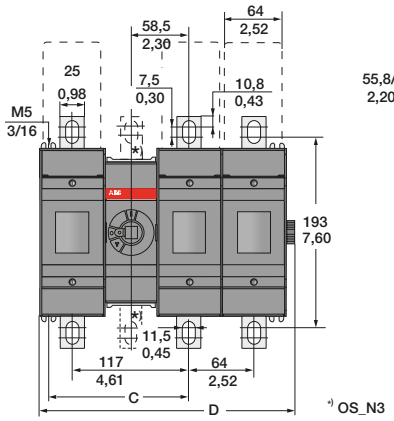

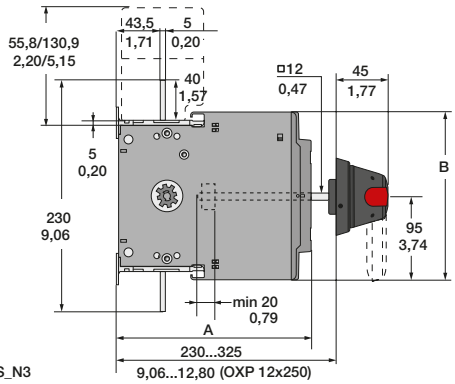

*) OS_N3

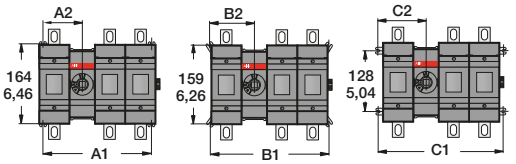

C000011/OS315-400_11_22 B

OS315-400					
[mm]	B11	B12	B13	B21	B22
A	176	176	176	176	176
B	194	194	194	194	194
C	140	140	140	204	204
D	190	254	318	254	318

OS400					
[mm]	D11	D12	D13	D21	D22
A	193	193	193	193	193
B	166	166	166	166	166
C	140	140	140	204	204
D	190	254	318	254	318

OS400					
[mm/in]	J11	J12	J13	J21	J22
A	176/6,93	176/6,93	176/6,93	176/6,93	176/6,93
B	194/7,64	194/7,64	194/7,64	194/7,64	194/7,64
C	140/5,51	140/5,51	140/5,51	204/8,03	204/8,03
D	190/7,48	254/10,00	318/12,52	254/10,00	318/12,52

OS315					
[mm]	B11	B12	B21	B22	B13
A1	163	227	227	291	291
A2	81,5	81,5	145,5	145,5	81,5
B1	181	245	245	309	309
B2	90,5	90,5	154,5	154,5	90,5
C1	199	263	263	327	327
C2	99,5	99,5	163,5	163,5	99,5

OS400					
[mm/in]	B11/D11/J11	B12/D12/J12	B21/D21/J21	B22/D22/J22	B13/D13/J13
A1	163/6,42	227/8,94	227/8,94	291/11,46	291/11,46
A2	81,5/3,21	81,5/3,21	145,5/5,73	145,5/5,73	81,5/3,21
B1	181/7,13	245/9,65	245/9,65	309/12,17	309/12,17
B2	90,5/3,56	90,5/3,56	154,5/6,08	154,5/6,08	90,5/3,56
C1	199/7,83	263/10,35	263/10,35	327/12,87	327/12,87
C2	99,5/3,92	99,5/3,92	163,5/6,44	163,5/6,44	99,5/3,92

Dimension drawings
Front operated switch fuses

OS 630_P and OS 800_P

Mechanism at the end of the switch fuse

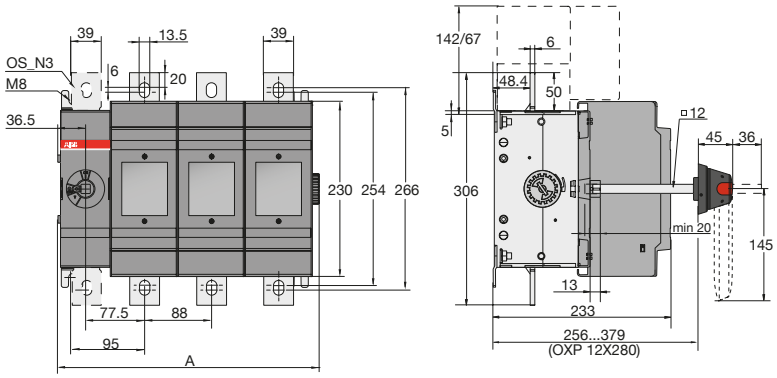

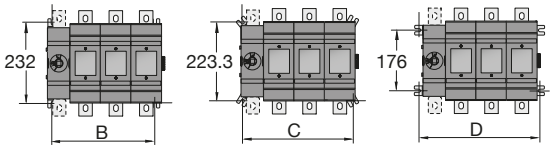

M00097/OS600-800_01-04 A / KE00041

OS630-800

[mm]	D/B01	D/B02	D/B03	D/B04
A	167	255	343	431
B	120	208	296	384
C	150	238	326	414
D	176	264	352	440

Mechanism between the poles

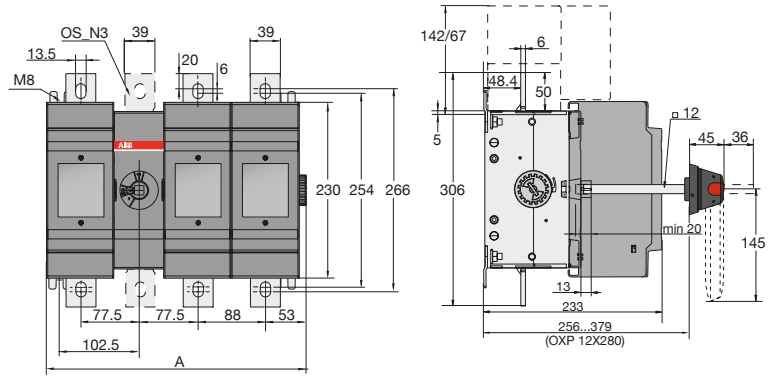

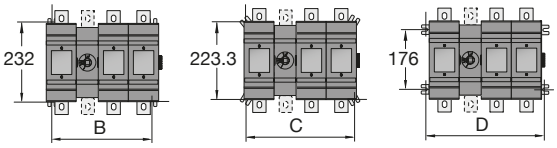

KE00042 / M00100/OS600-800_11-22 A

OS630-800

[mm]	D/B11	D/B12	D/B13	D/B22
A	253	341	429	429
B	205	293	381	381
C	235	323	411	411
D	261	349	437	437

Dimension drawings
Front operated switch fuses

OS1200...1250_P

Mechanism at the end of the switch fuse

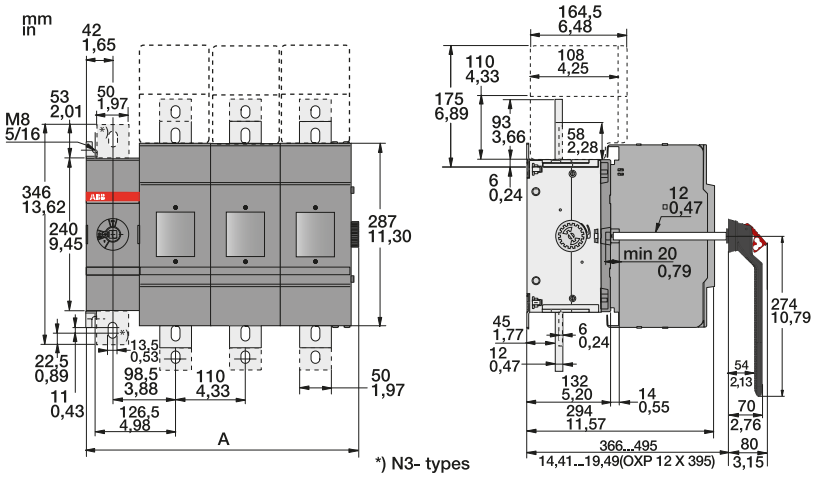

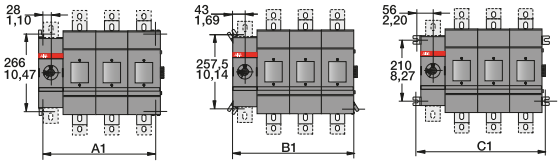

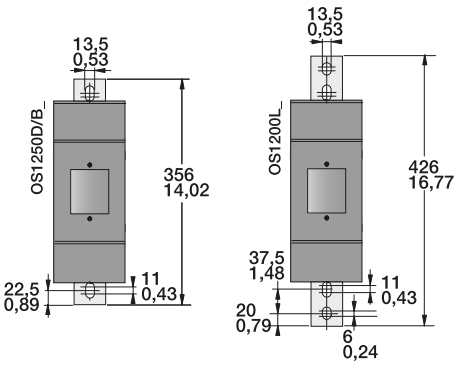

M002207 / OS1200-1250_01-04 B

OS1200/1250				
[mm/in]	D/L/B01	D/L/B02	D/L/B03	D/L/B04
A	209/8,23	319/12,56	429/16,89	539/21,22
A1	166/6,54	276/10,87	386/15,20	496/19,53
B1	196/7,72	306/12,05	416/16,38	526/20,71
C1	222/8,74	332/13,07	442/17,40	552/21,73

Mechanism between the poles

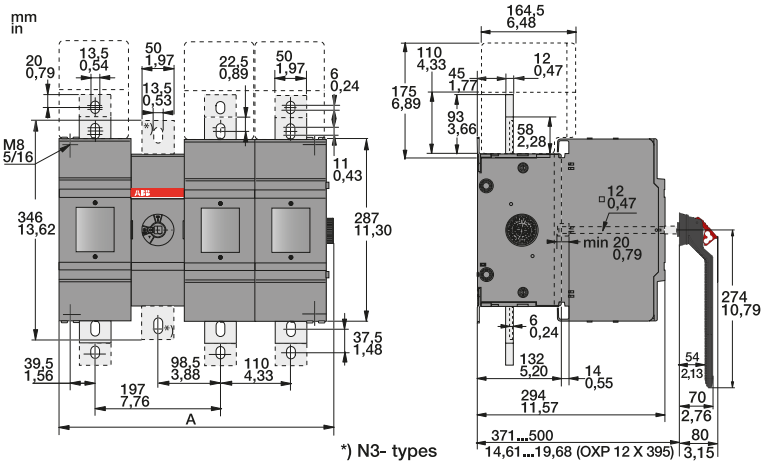

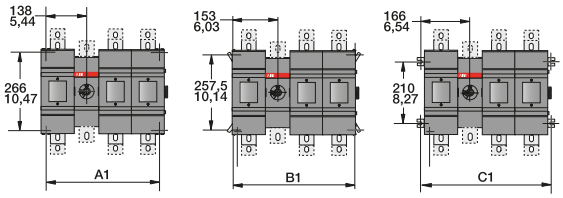

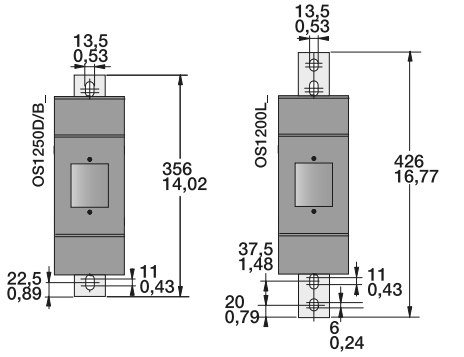

M002208/OS1200-1250_11-22 B

OS1200/1250				
[mm/in]	D/L/B11	D/L/B12	D/L/B13	D/L/B22
A	322/12,68	432/17,01	542/21,34	542/21,34
A1	276/10,87	386/15,20	496/19,53	496/19,53
B1	306/12,05	416/16,38	526/20,71	526/20,71
C1	322/13,07	442/17,40	552/21,73	552/21,73

Dimension drawings
Front operated switch fuses

OS100GJ_

Mechanism at the end of the switch fuse

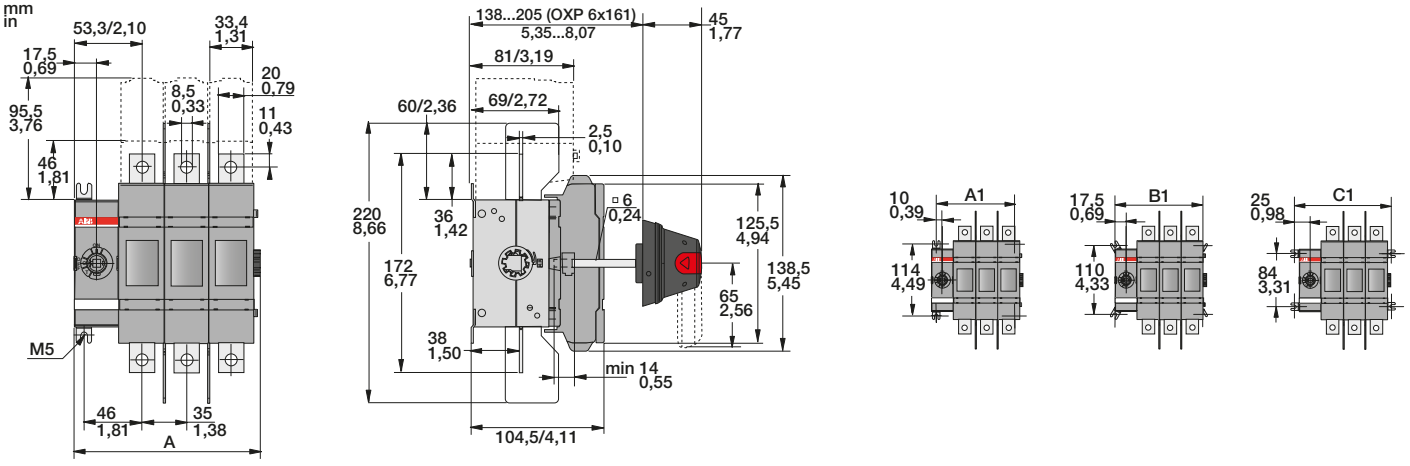

M00291/OS100GJ01-04 B

OS100GJ				
[mm/in]	J01	J02	J03	J04
A	76,5/3,01	111,5/4,39	146,5/5,77	181,5/7,15
A1	55/2,17	90/3,54	125/4,92	160/6,30
B1	70/2,76	105/4,13	140/5,51	175/6,89
C1	85/3,35	120/4,72	155/6,10	190/7,48

Mechanism between the poles

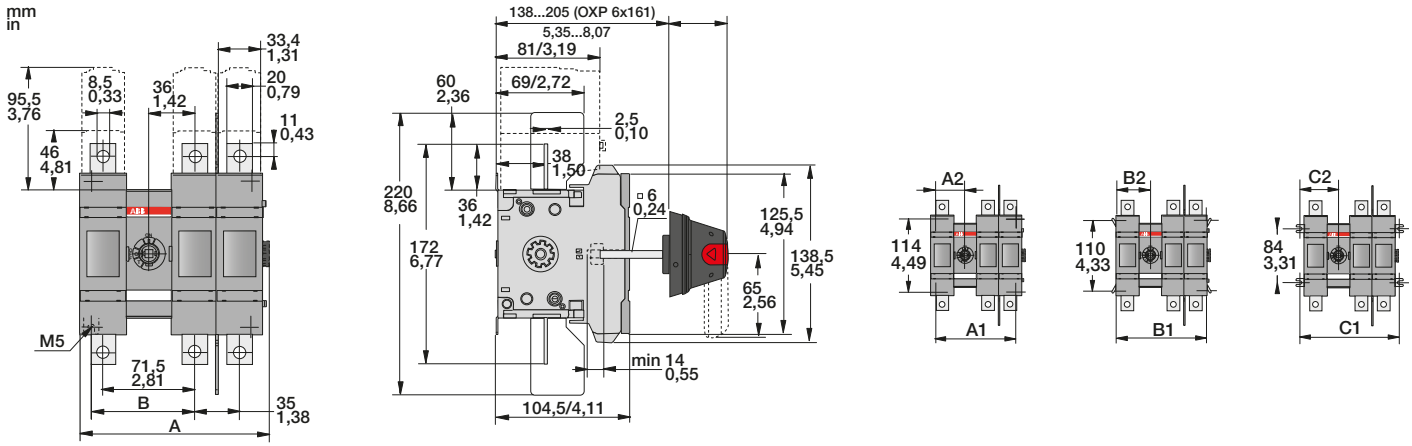

M00292/OS100GJ11-22 B

OS100GJ				
[mm/in]	J11	J12	J13	J22
A	113/4,45	148/5,83	183/7,20	183/7,20
B	81/3,19	81/3,19	81/3,19	116/4,57
A1	90/3,54	125/4,92	160/6,30	160/6,30
A2	45/1,77	45/1,77	45/1,77	80/3,15
B1	105/4,13	140/5,51	175/6,89	175/6,89
B2	52,5/2,07	52,5/2,07	52,5/2,07	160/3,44
C1	120/4,72	155/6,10	190/7,48	190/7,48
C2	60/2,36	60/2,36	60/2,36	95/3,74

Dimension drawings
Front operated switch fuses

OS200J

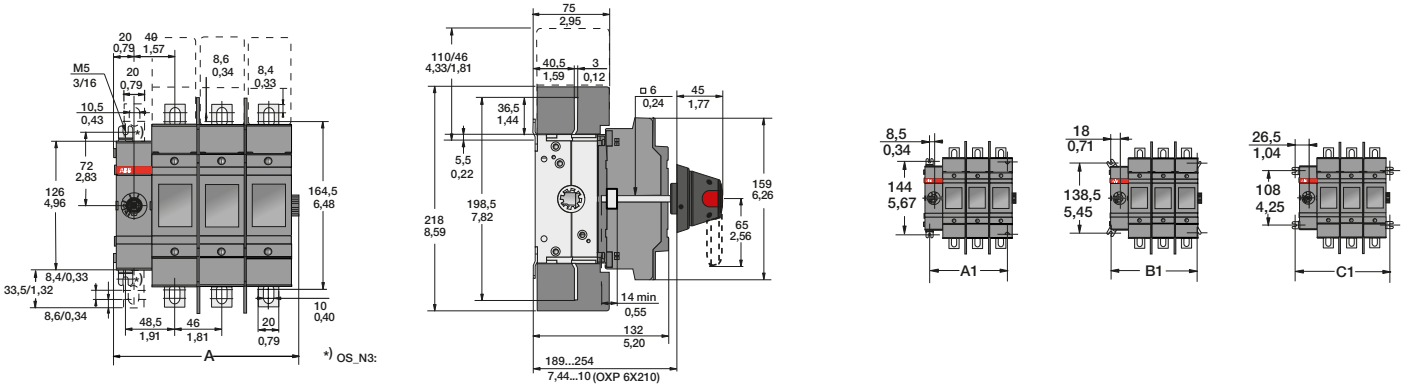

OS200

[mm/in]	J01	J02	J03	J04
A	89,5 / 3,52	135,5/5,34	181,5/7,15	227,5/8,96
A1	60,5 / 2,38	106,5/4,19	152,5/6,00	198,5/7,82
B1	79,5 / 3,13	125,5/4,94	171,5/6,75	217,5/8,56
C1	96,5 / 3,80	142,5 / 5,61	188,5/7,42	234,5/9,23

M000001/OS200J01_04 H

OS400J

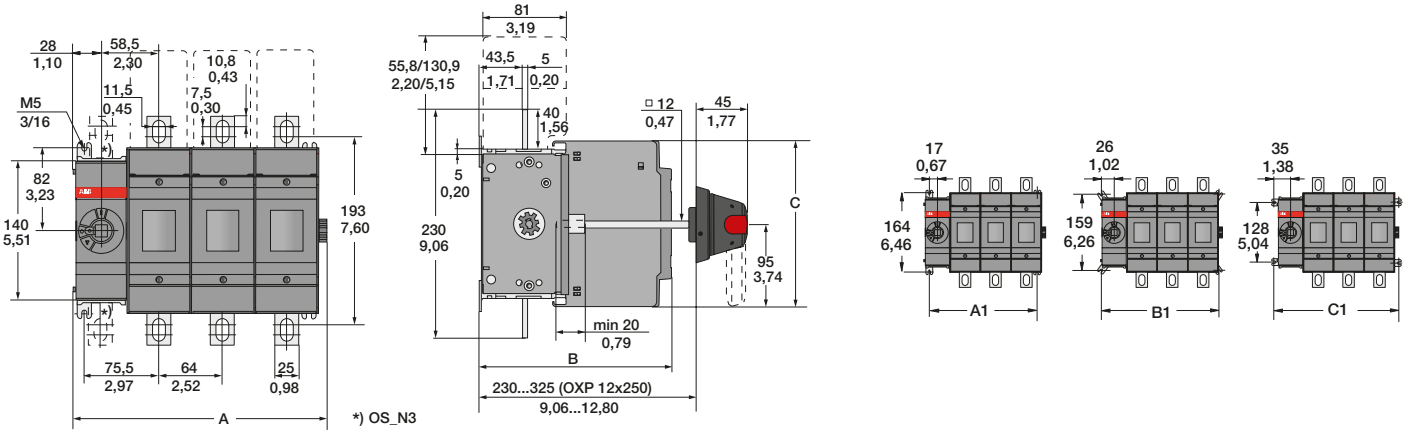

OS315-400

[mm]	B01	B02	B03	B04
A	127	191	255	319
B	176	176	176	176
C	194	194	194	194

OS400

[mm]	D01	D02	D03	D04
A	127	191	255	319
B	193	193	193	193
C	166	166	166	166

OS400

[mm/in]	J01	J02	J03	J04
A	127/5,00	191/7,52	255/10,04	319/12,56
B	176/6,93	176/6,93	176/6,93	176/6,93
C	194/7,64	194/7,64	194/7,64	194/7,64

OS315

[mm]	B01	B02	B03	B04
A1	98,5	162,5	226,5	290,5
B1	116,5	180,5	244,5	308,5
C1	134,5	198,5	262,5	326,5

OS315

[mm/in]	B01/D01/J01	B02/D02/J02	B03/D03/J03	B04/D04/J04
A1	98,5/3,88	162,5/6,40	226,5/8,92	290,5/11,44
B1	116,5/4,59	180,5/7,11	244,5/9,63	308,5/12,15
C1	134,5/5,30	198,5/7,81	262,5/10,33	326,5/12,85

C000012 /OS315_400_01_04 B

Dimension drawings
Front operated switch fuses

OS600J and OS800L

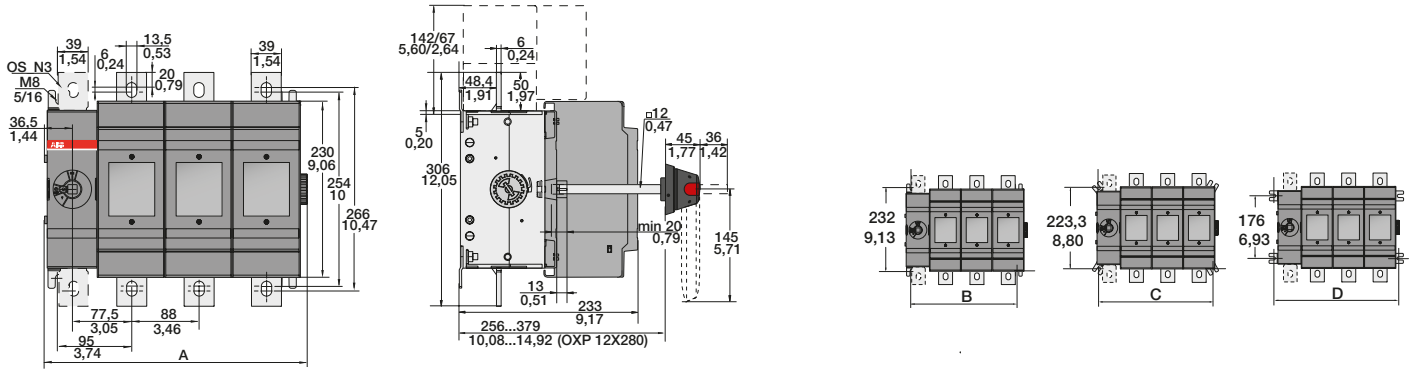

M00097 / OS 600-800_01-04 B

OS600-800

[mm/in]	D/B/J/L01	D/B/J/L02	D/B/J/L03	D/B/J/L04
A	167/6,57	255/10,04	343/13,50	431/16,97
B	120/4,72	208/8,19	296/11,65	384/15,12
C	150/5,91	238/9,37	326/12,83	414/16,30
D	176/6,93	264/10,39	352/13,86	440/17,32

OS1200L

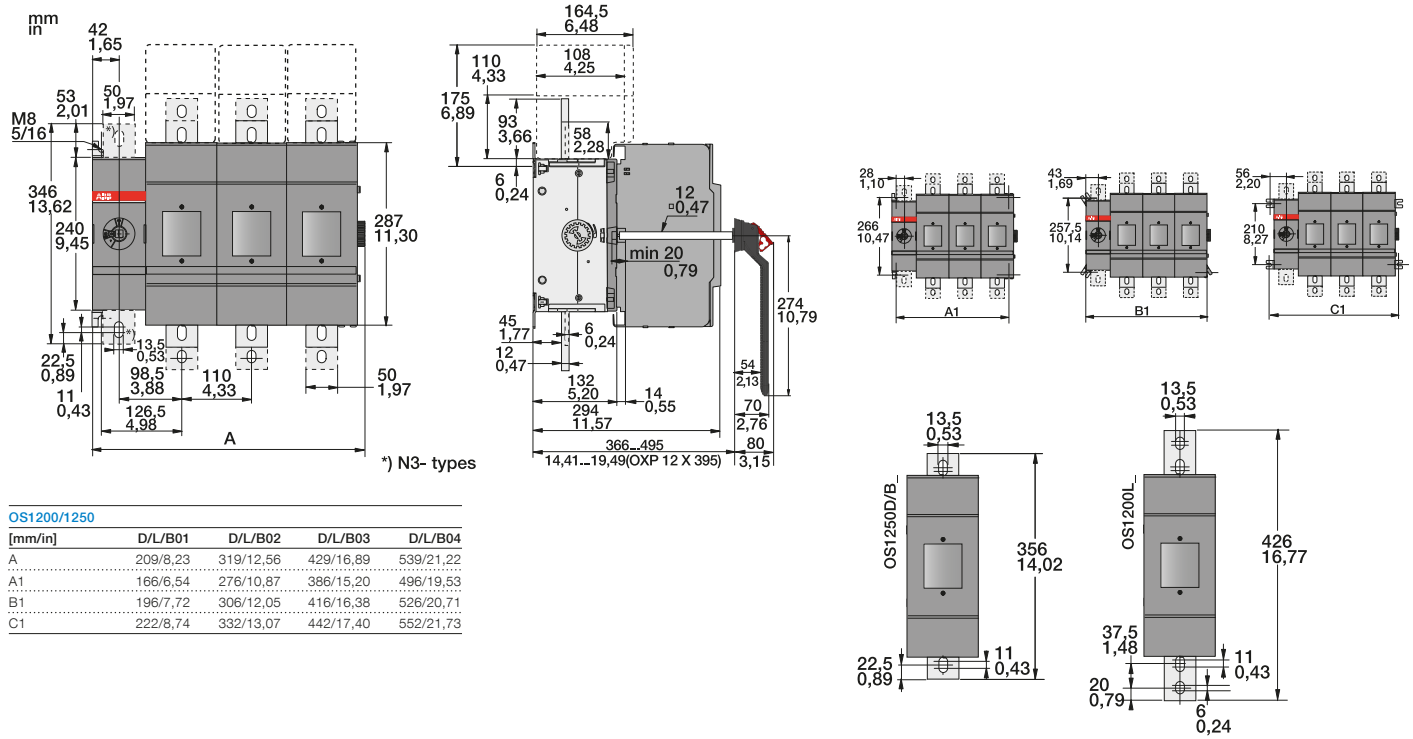

M00207 / OS1200-1250_01-0

OS1200/1250

[mm/in]	D/L/B01	D/L/B02	D/L/B03	D/L/B04
A	209/8,23	319/12,56	429/16,89	539/21,22
A1	166/6,54	276/10,87	386/15,20	496/19,53
B1	196/7,72	306/12,05	416/16,38	526/20,71
C1	222/8,74	332/13,07	442/17,40	552/21,73

Dimension drawings
Front operated switch fuses with direct mounted handles

OS32G_K...OS63G_K

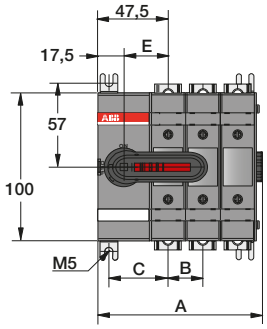

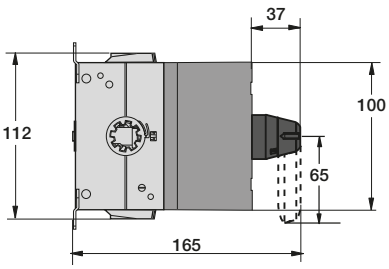

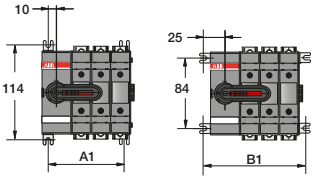

MX00389/OS32-63G_01-04K A

OS32-63G_K				
[mm]	D01	D02	D03	D04
A	64,5	88	111,5	135,5
B	40	40	40	40
C	-	23,5	23,5	23,5
E	30	30	30	30
A1	45	68,5	92	111,5
B1	75	98,5	122	145,5

OS32-63G_K				
[mm]	B/F01	B/F02	B/F03	B/F04
A	64,5	88	111,5	135,5
B	40	40	40	40
C	-	23,5	23,5	23,5
E	30	30	30	30
A1	45	68,5	92	111,5
B1	75	98,5	122	145,5

OS100G_K...OS160G_K

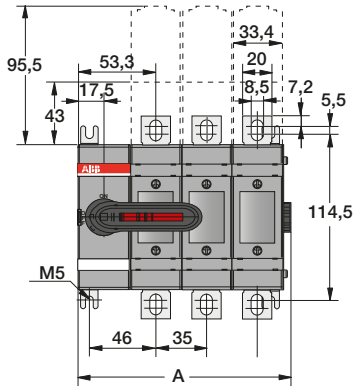

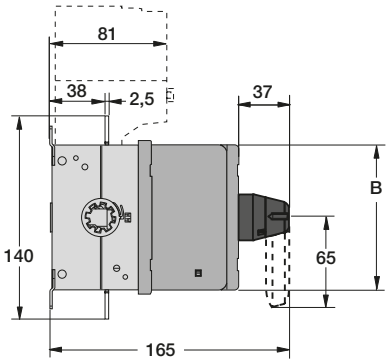

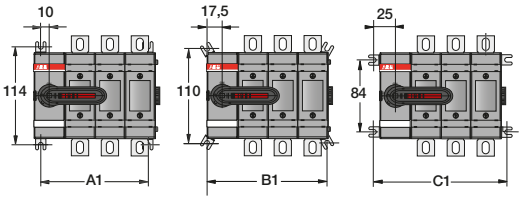

MX00390/OS100-160G_01-04K A

OS100-160G_K				
[mm]	D/F01	D/F02	D/F03	D/F04
A	76,5	111,5	146,5	181,5
B	100	100	100	100
A1	55	90	125	160
B1	70	105	140	175
C1	85	120	155	190

OS100-160G_K				
[mm]	B01	B02	B03	B04
A	76,5	111,5	146,5	181,5
B	118	118	118	118
A1	55	90	125	160
B1	70	105	140	175
C1	85	120	155	190

Dimension drawings
Front operated switch fuses with direct mounted handles

OS200_K and OS250_K

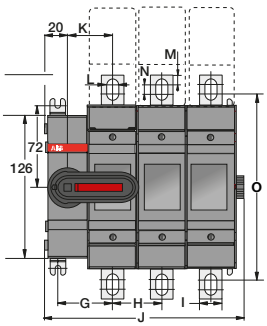

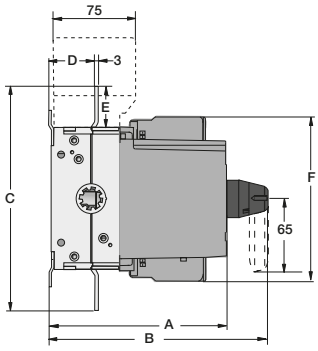

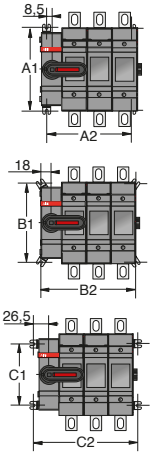

OS200K

[mm]	D01/B01	D02/B02	D03/B03	D04/B04
A1	144	144	144	144
A2	60,5	104	147,5	191
B1	138,5	138,5	138,5	138,5
B2	79,5	123	166,5	210
C1	108	108	108	108
C2	96,5	140	183,5	227

OS250K

[mm]	D01	D02	D03	D04
A1	144	144	144	144
A2	70,5	124,5	178,5	232,5
B1	138,5	138,5	138,5	138,5
B2	89,5	143,5	197,5	251,5
C1	108	108	108	108
C2	106,5	106,5	214,5	268,5

OS200_K

[mm]	D01	B01	D02	B02	D03	B03	D04	B04
A	154	130	154	130	154	130	154	130
B	191	167	191	167	191	167	191	167
C	198,5	198,5	198,5	198,5	198,5	198,5	198,5	198,5
D	40,5	40,5	40,5	40,5	40,5	40,5	40,5	40,5
E	36,5	36,5	36,5	36,5	36,5	36,5	36,5	36,5
F	144,5	144,5	144,5	144,5	144,5	144,5	144,5	144,5
G	48,5	48,5	48,5	48,5	48,5	48,5	48,5	48,5
H	-	-	43,5	43,5	43,5	43,5	43,5	43,5
I	20	20	20	20	20	20	20	20
J	89,5	89,5	133	133	176,5	176,5	220	220
K	40	40	40	40	40	40	40	40
L	10	10	10	10	10	10	10	10
M	8,5	8,5	8,5	8,5	8,5	8,5	8,5	8,5
N	8,5	8,5	8,5	8,5	8,5	8,5	8,5	8,5
O	164,5	164,5	164,5	164,5	164,5	164,5	164,5	164,5

OS250_K

[mm]	D01/B01	D02/B02	D03/B03	D04/B04
A	154	154	154	154
B	191	191	191	191
C	193	193	193	193
D	40,5	40,5	40,5	40,5
E	33,5	33,5	33,5	33,5
F	148,5	148,5	148,5	148,5
G	53,5	53,5	53,5	53,5
H	-	54	54	54
I	25	25	25	25
J	99,5	153,5	207,5	261,5
K	45	45	45	45
L	11	11	11	11
M	11,5	11,5	11,5	11,5
N	4	4	4	4
O	162	162	162	162

M00080/OS 200_250_01_04K C

OS315_K and OS400_K

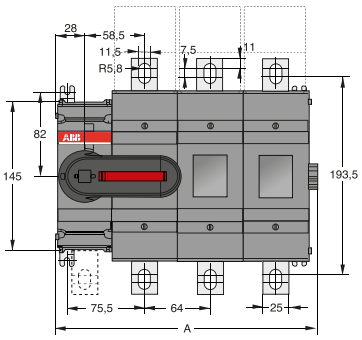

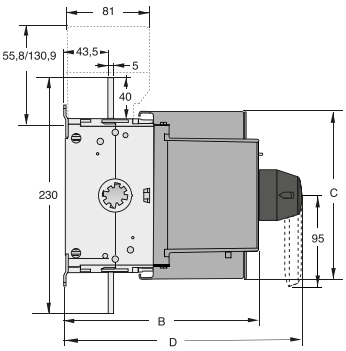

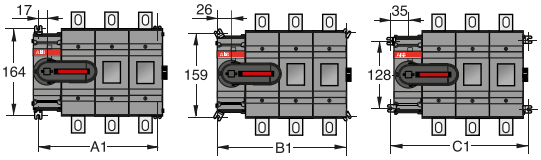

OS315,OS400

[mm]	B01K	B02K	B03K	B04K
A	127	191	255	319
B	176	176	176	176
C	194	194	194	194
D	219	219	219	219
A1	98,5	162,5	226,5	290,5
B1	116,5	180,5	244,5	308,5
C1	134,5	198,5	262,5	326,5

OS400

[mm]	D01K	D02K	D03K	D04K
A	127	191	255	319
B	193	193	193	193
C	166	166	166	166
D	236	236	236	236
A1	98,5	162,5	226,5	290,5
B1	116,5	180,5	244,5	308,5
C1	134,5	198,5	262,5	326,5

M00081/OS 315-400_01_04K B

Dimension drawings
Front operated switch fuses with direct mounted handles

OS 600/630_K and OS 800_K

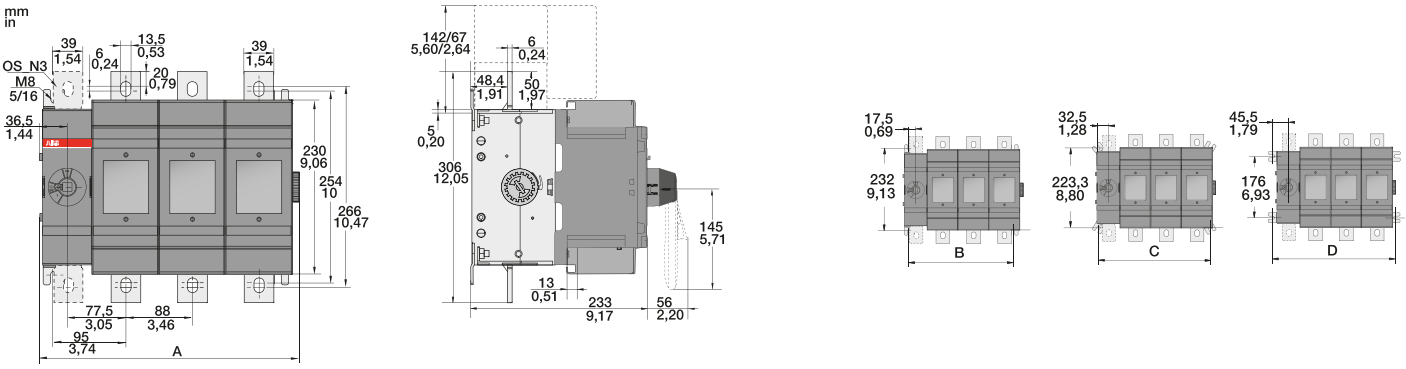

M00229/OS600-800_01-04K A

OS600-800

[mm/in]	D/B/J/L01	D/B/J/L02	D/B/J/L03	D/B/J/L04
A	167/6,57	255/10,04	343/13,50	431/16,97
B	120/4,72	208/8,19	296/11,65	384/15,12
C	150/5,91	238/9,37	326/12,83	414/16,30
D	176/6,93	264/10,39	352/13,86	440/17,32

OS 1200/1250_K

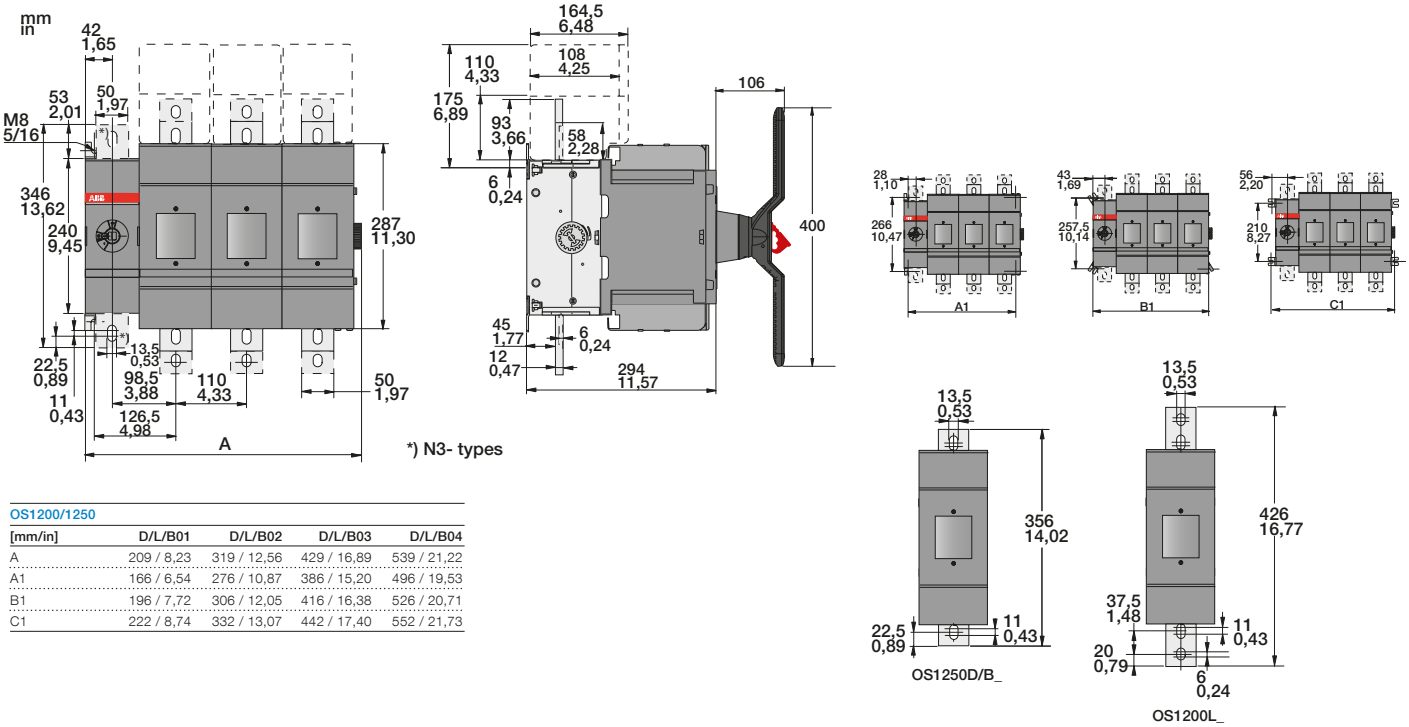

M00231 / OS1200-1250_01-04K A

OS1200/1250

[mm/in]	D/L/B01	D/L/B02	D/L/B03	D/L/B04
A	209 / 8,23	319 / 12,56	429 / 16,89	539 / 21,22
A1	166 / 6,54	276 / 10,87	386 / 15,20	496 / 19,53
B1	196 / 7,72	306 / 12,05	416 / 16,38	526 / 20,71
C1	222 / 8,74	332 / 13,07	442 / 17,40	552 / 21,73

Dimension drawings
Side operated switch fuses

OS Mini

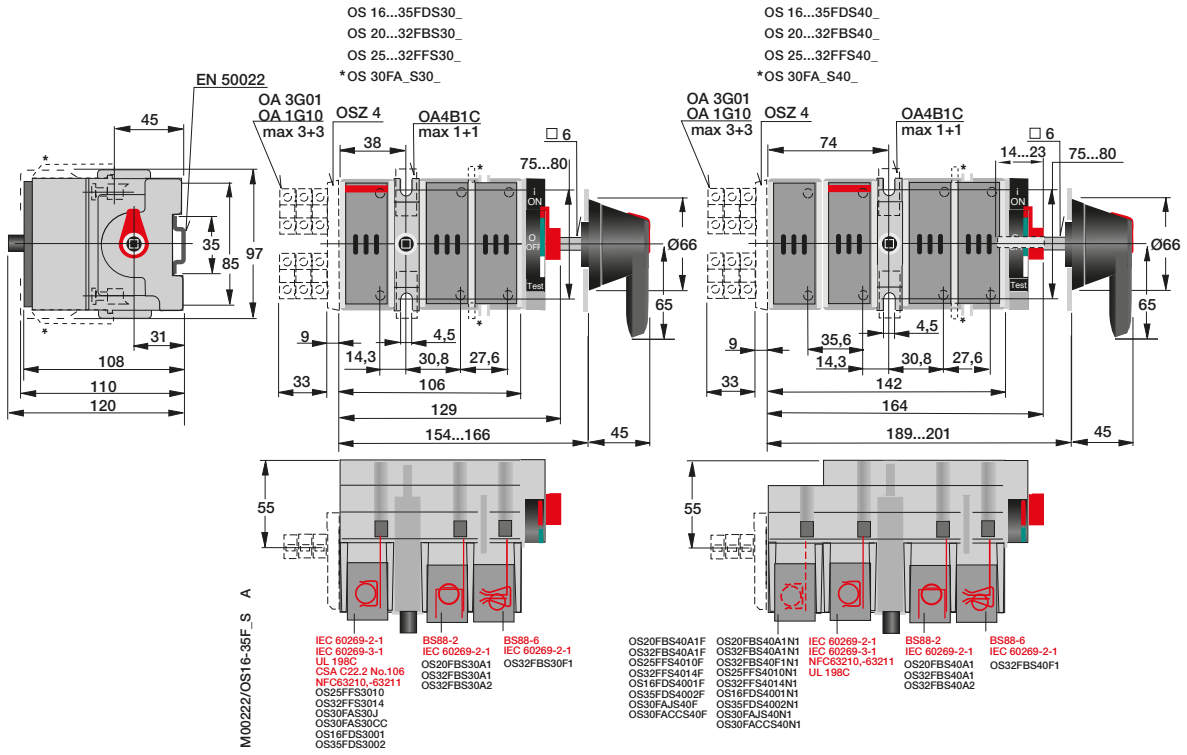

OS 40 Mini

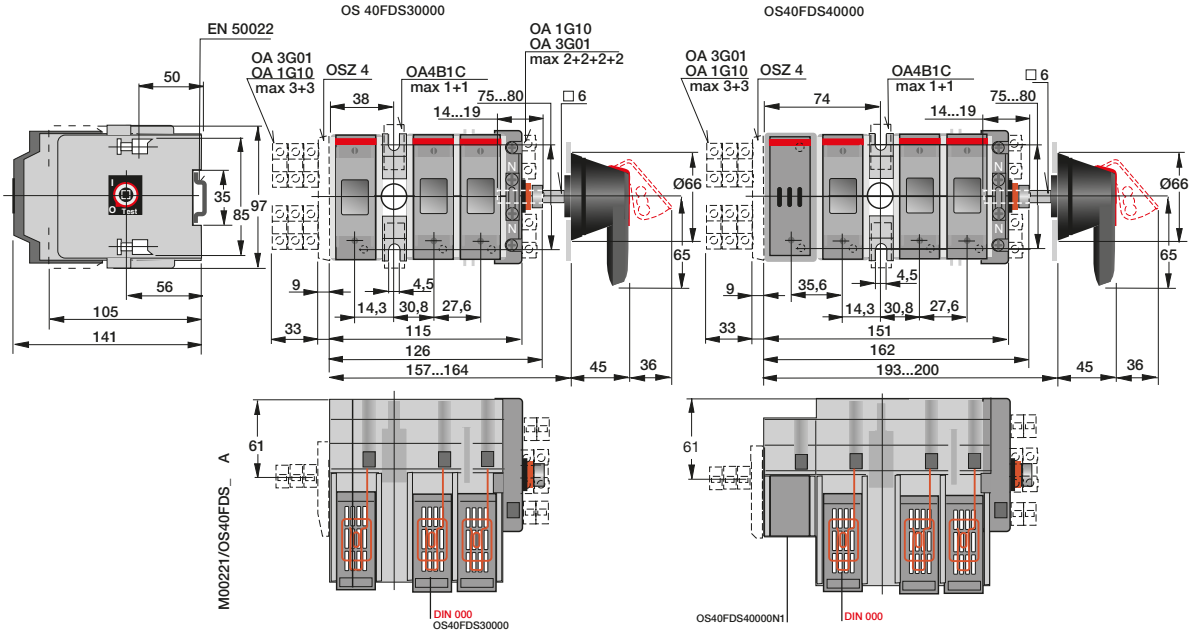

Dimension drawings
Side operated switch fuses

OS32G...63G_S_

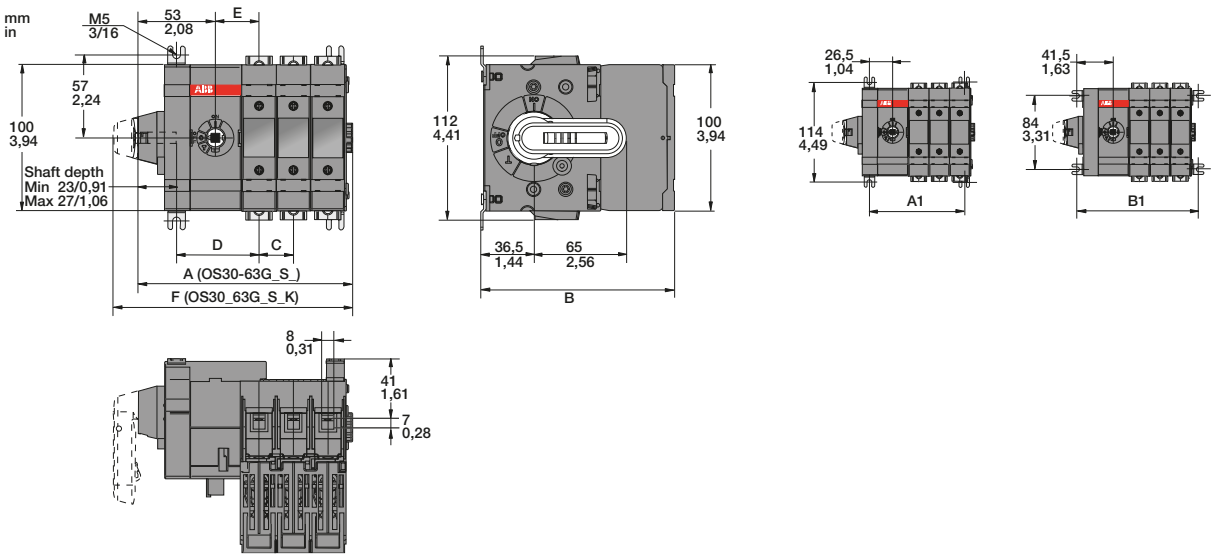

OS32-63G_

[mm]	DS01	DS02	DS03	DS04	B/FS01	B/FS02	B/FS03	B/FS04
A	99,5	123	146,5	170	99,5	123	146,5	170
B	132,5	132,5	132,5	132,5	120,5	120,5	120,5	120,5
C	-	23,5	23,5	23,5	-	23,5	23,5	23,5
D	56,5	56,5	56,5	56,5	56,5	56,5	56,5	56,5
E	30	30	30	30	30	30	30	30
F	116,5	140	163,5	187	116,5	140	163,5	187
A1	61,5	85	108,5	132	61,5	85	108,5	132
B1	91,5	115	138,5	162,5	91,5	115	138,5	162,5

OS60G_

[mm/in]	JS01	JS02	JS03	JS04
A	109,5/4,31	144,5/5,69	179,5/7,07	214,5/8,44
B	130/5,12	130/5,12	130/5,12	130/5,12
C	-	35/1,38	35/1,38	35/1,38
D	62/2,44	62/2,44	62/2,44	62/2,44
E	36/1,41	36/1,41	36/1,41	36/1,41
F	126,5/4,98	161,5/6,36	196,5/7,74	231,5/9,11
A1	67,5/2,66	102,5/4,04	137,5/5,41	172,5/6,79
B1	37,5/1,48	72,5/2,85	107,5/4,23	142,5/5,61

M00296/OS30_63G_01_04S A

OS100G...160G_S_

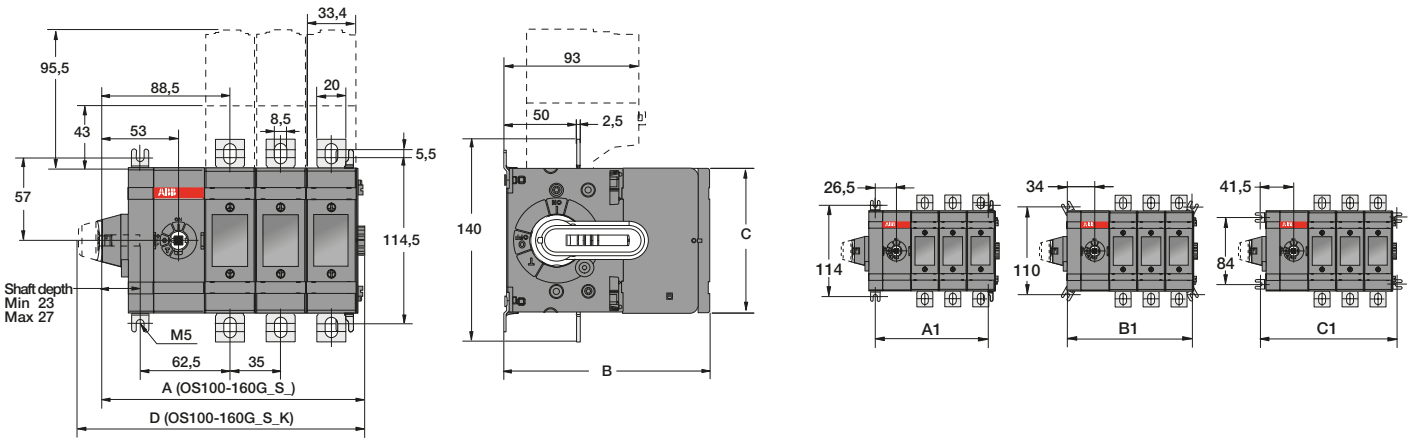

OS100-160G

[mm]	D/F01	D/F02	D/F03	D/F04	B01	B02	B03	B04
A	111,5	146,5	181,5	216,5	111,5	146,5	181,5	216,5
B	142	142	142	142	126,5	126,5	126,5	126,5
C	100	100	100	100	118	118	118	118
D	128,5	163,5	198,5	233,5	128,5	163,5	198,5	233,5
A1	71,5	106,5	141,5	176,5	71,5	106,5	141,5	176,5
B1	86,5	121,5	156,5	191,5	86,5	121,5	156,5	191,5
C1	101,5	136,5	171,5	206,5	101,5	136,5	171,5	206,5

M00298/OS100_160G_S01_04 A

Dimension drawings
Side operated switch fuses

OS100GJS

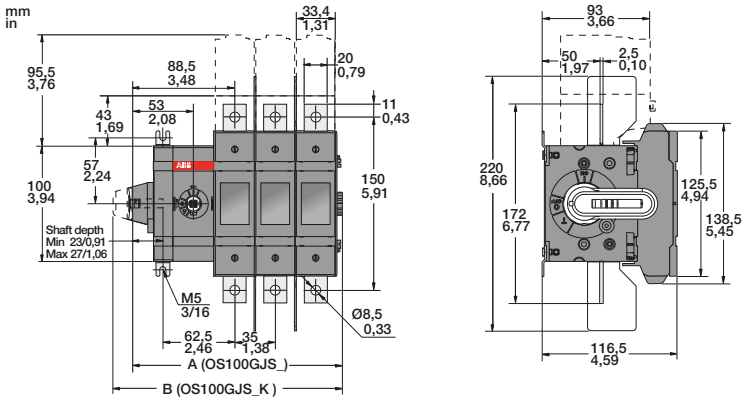

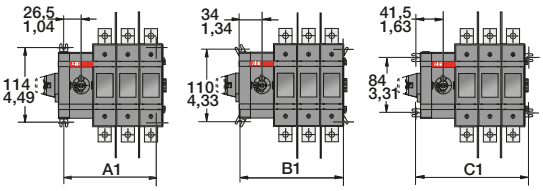

M00396/OS30_63G_01_045 A

OS100G_

[mm/in]	JS01	JS02	JS03	JS04
A	111,5/4,39	146,5/5,77	181,5/7,15	216,5/8,52
B	128,5/5,06	163,5/6,44	198,5/7,91	233,5/9,19
A1	71,5/2,81	106,5/4,19	141,5/5,57	176,5/6,95
B1	86,5/3,41	121,5/4,78	156,5/6,16	191,5/7,54
C1	101,5/4,00	136,5/5,37	171,5/6,75	206,5/8,13

OS200...250_S_

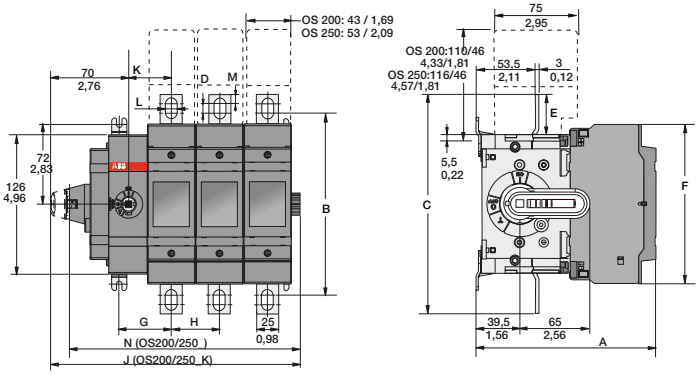

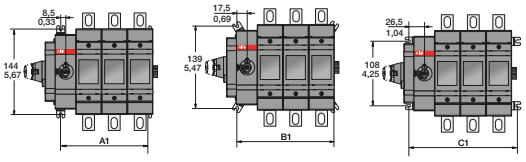

M00153/OS200-250_S01-04_ A

OS200_, OS200_K

[mm/in]	DS01	BS01	DS02	BS02	DS03	BS03	DS04	BS04
A	149/5,87	130,0/5,12	149,0/5,87	130,0/5,12	149,0/5,87	130,0/5,12	149,0/5,87	149,0/5,87
B	164,5/6,48	164,5/6,48	164,5/6,48	164,5/6,48	164,5/6,48	164,5/6,48	164,5/6,48	164,5/6,48
C	198,5/7,81	198,5/7,81	198,5/7,81	198,5/7,81	198,5/7,81	198,5/7,81	198,5/7,81	198,5/7,81
D	8,5/0,33	8,5/0,33	8,5/0,33	8,5/0,33	8,5/0,33	8,5/0,33	8,5/0,33	8,5/0,33
E	36,5/1,44	36,5/1,44	36,5/1,44	36,5/1,44	36,5/1,44	36,5/1,44	36,5/1,44	36,5/1,44
F	144,5/5,69	144,5/5,69	144,5/5,69	144,5/5,69	144,5/5,69	144,5/5,69	144,5/5,69	144,5/5,69
G	48,5/1,91	48,5/1,91	48,5/1,91	48,5/1,91	48,5/1,91	48,5/1,91	48,5/1,91	48,5/1,91
H	-/-	-/-	43,5/1,71	43,5/1,71	43,5/1,71	43,5/1,71	43,5/1,71	43,5/1,71
I	20,0/0,79	20,0/0,79	20,0/0,79	20,0/0,79	20,0/0,79	20,0/0,79	20,0/0,79	20,0/0,79
J	138,5/5,45	138,5/5,45	182,0/7,17	182,0/7,17	225,5/8,88	225,5/8,88	269,0/10,59	269,0/10,59
K	40,0/1,57	40,0/1,57	40,0/1,57	40,0/1,57	40,0/0,39	840,0/1,57	40,0/1,57	40,0/1,57
L	10,0/0,39	10,0/0,39	10,0/0,39	10,0/0,39	10,0/0,39	10,0/0,39	10,0/0,39	10,0/0,39
M	8,5/0,33	8,5/0,33	8,5/0,33	8,5/0,33	8,4/0,33	8,5/0,33	8,5/0,33	8,5/0,33
N	121,5/4,78	121,5/4,78	165,0/6,50	165,0/6,50	208,5/8,21	208,5/8,21	252,0/9,92	252,0/9,92
A1	60,5/2,38	60,5/2,38	104,0/4,09	104,0/4,09	147,5/5,81	147,5/5,81	191,0/7,52	191,0/7,52
B1	79,5/3,13	79,5/3,13	123,0/4,84	123,0/4,84	166,5/6,56	166,5/6,56	210,0/8,27	210,0/8,27
C1	96,5/3,80	96,5/3,80	140,0/5,51	140,0/5,51	183,5/7,22	183,5/7,22	227,0/8,94	227,0/8,94

OS250_, OS250_K

[mm/in]	DS01	BS01	DS02	BS02
A	154,0/6,06	154,0/6,06	154,0/6,06	154,0/6,06
B	162,0/6,38	162,0/6,38	162,0/6,38	162,0/6,38
C	193,0/7,60	193,0/7,60	193,0/7,60	193,0/7,60
D	4,0/0,16	4,0/0,16	4,0/0,16	4,0/0,16
E	33,5/1,32	33,5/1,32	33,5/1,32	33,5/1,32
F	148,5/5,85	148,5/5,85	148,5/5,85	148,5/5,85
G	53,5/2,11	53,5/2,11	53,5/2,11	53,5/2,11
H	-/-	54,0/2,13	54,0/2,13	54,0/2,13
I	25,0/0,98	25,0/0,98	25,0/0,98	25,0/0,98
J	148,5/5,85	202,5/7,97	256,5/10,10	310,5/12,22
K	45,0/1,77	45,0/1,77	45,0/1,77	45,0/1,77
L	11,0/0,43	11,0/0,43	11,0/0,43	11,0/0,43
M	11,5/0,45	11,5/0,45	11,5/0,45	11,5/0,45
N	131,5/5,18	186,0/7,32	240,0/9,45	294,0/11,57
A1	70,5/2,78	124,5/4,90	178,5/7,03	232,5/9,15
B1	89,5/3,52	143,5/5,65	197,5/7,78	251,5/9,90
C1	106,5/4,19	214,5/8,44	268,5/10,57	322,5/12,70

Dimension drawings
Side operated switch fuses

OS315...400_S_

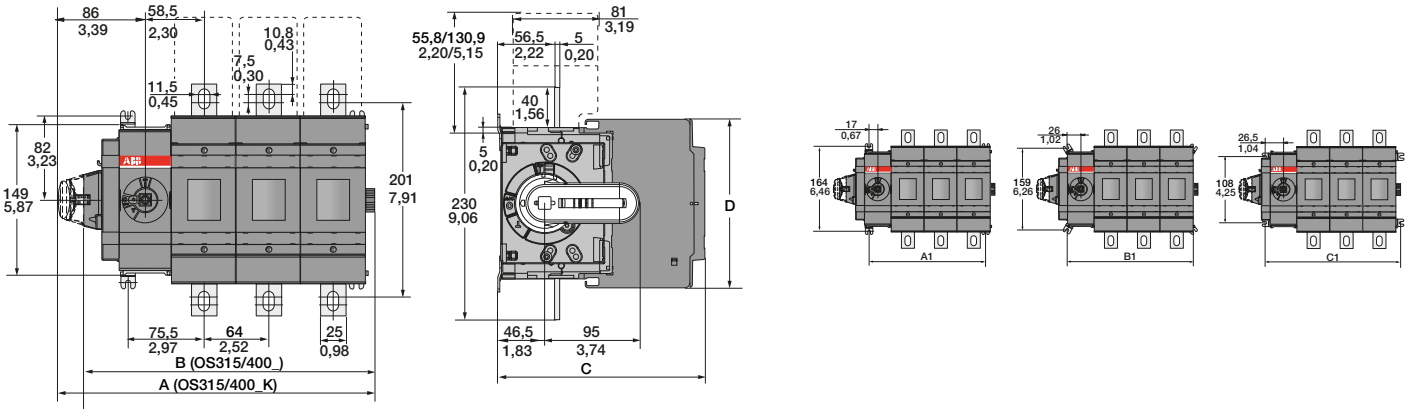

OS315, OS315_K, OS400, OS400_K

[mm/in]	BS01/JS01	BS02/JS02	BS03/JS03	BS04/JS04
A	185,0/7,28	249,0/9,80	313,0/12,32	377,0/14,84
B	160,0/6,30	224,0/8,82	288,0/11,34	352,0/13,86
C	176,0/6,93	176,0/6,93	176,0/6,93	176,0/6,93
D	194,0/7,64	194,0/7,64	194,0/7,64	194,0/7,64
A1	98,5/3,88	162,5/6,40	226,5/8,92	290,5/11,44
B1	116,5/4,59	180,5/7,11	244,5/9,63	308,5/12,15
C1	134,5/5,30	198,5/7,81	262,5/10,33	326,5/12,85

OS400_, OS400_K

[mm/in]	DS01	DS02	DS03	DS04
A	185,0/7,28	249,0/9,80	313,0/12,32	377,0/14,84
B	160,0/6,30	224,0/8,82	288,0/11,34	352,0/13,86
C	193,0/7,60	193,0/7,60	193,0/7,60	193,0/7,60
D	166,0/6,54	166,0/6,54	166,0/6,54	166,0/6,54
A1	98,5/3,88	162,5/6,40	226,5/8,92	290,5/11,44
B1	116,5/4,59	180,5/7,11	244,5/9,63	308,5/12,15
C1	134,5/5,30	198,5/7,81	262,5/10,33	326,5/12,85

M00154/OS315-400_S01-04_ A

OS630_S_ and OS800_S_

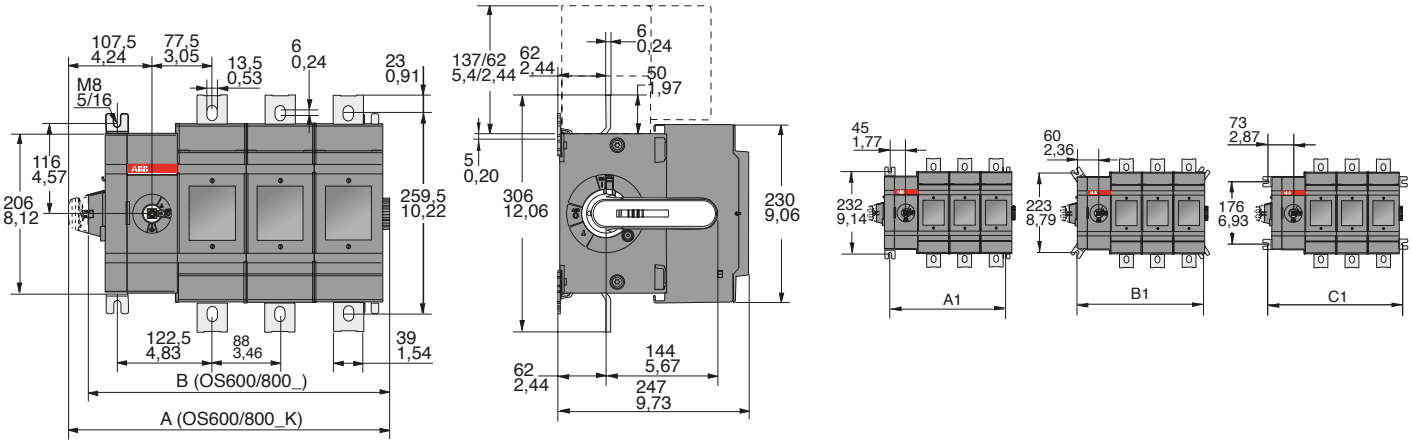

OS600/630/800_ , OS600/630/800_K

[mm/in]	DS/BS/JS/LS01	DS/BS/JS/LS02	DS/BS/JS/LS03	DS/BS/JS/LS05
A	238/9,38	326/12,84	414/16,31	502/19,78
B	213/8,39	301/11,86	389/15,32	477/18,79
A1	147,5/5,81	235,5/9,28	323,5/12,75	411,5/16,21
B1	177,5/6,99	265,5/10,46	353,5/13,93	441,5/17,39
C1	203,5/8,02	291,5/11,48	379,5/14,95	467,5/18,42

M00146/OS600-800_S01_-04_ C

Dimension drawings
Special connected switch fuses

OS200_12/22_ and OS250_12/22 (BB)

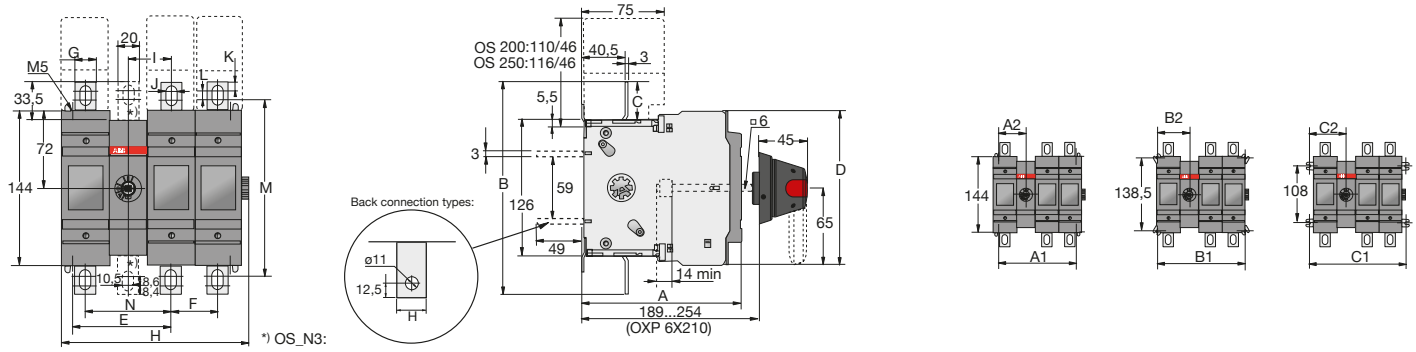

OS200_BB_

[mm]	D11	B11	D12	B12	D13	B13	D22	B22
A	149	130	149	130	141	130	149	130
B	199	199	199	199	199	199	199	199
C	36,5	36,5	36,3	36,5	36,5	36,5	36,5	36,5
D	144,5	144,5	144,5	144,5	144,5	144,5	144,5	144,5
E	92	92	92	92	92	92	135,5	135,5
F	43,5	43,5	43,5	43,5	43,5	43,5	43,5	43,5
G	20	20	20	20	20	20	20	20
H	132	132	175,5	175,5	219	219	219	219
I	40	40	40	40	40	40	40	40
J	10	10	10	10	10	10	10	10
K	8,4	8,4	8,4	8,4	8,4	8,4	8,4	8,4
L	8,6	8,6	8,6	8,6	8,6	8,6	8,6	8,6
M	165	165	165	165	165	165	165	165
N	80	80	80	80	80	80	80	80
A1	104	104	147,5	147,5	191	191	191	191
A2	52	52	52	52	52	52	95,5	95,5
B1	123	123	166,5	166,5	210	210	210	210
B2	61,5	61,5	61,5	61,5	61,5	61,5	105	105
C1	140	140	183,5	183,5	227	227	227	227
C2	70	70	70	70	70	70	113,5	113,5

OS250_BB_

[mm]	D11	D12	D13	D22
A	154	154	154	154
B	193	193	193	193
C	33,5	33,5	33,5	33,5
D	148,5	148,5	148,5	148,5
E	112,5	112,5	112,5	161
F	54	54	54	54
G	25	25	25	25
H	152	206	260	260
I	45	45	45	45
J	11	11	11	11
K	11,5	11,5	11,5	11,5
L	4	4	4	4
M	162	162	162	162
N	90	90	90	90
A1	124	178	232	232
A2	62	62	62	116
B1	143	197	251	251
B2	71,5	71,5	71,5	125,5
C1	160	214	268	268
C2	80	80	80	134

M00014/OS200_250_11_22 K / M07022

OS200_03/04_ and OS250_03/04 (BB)

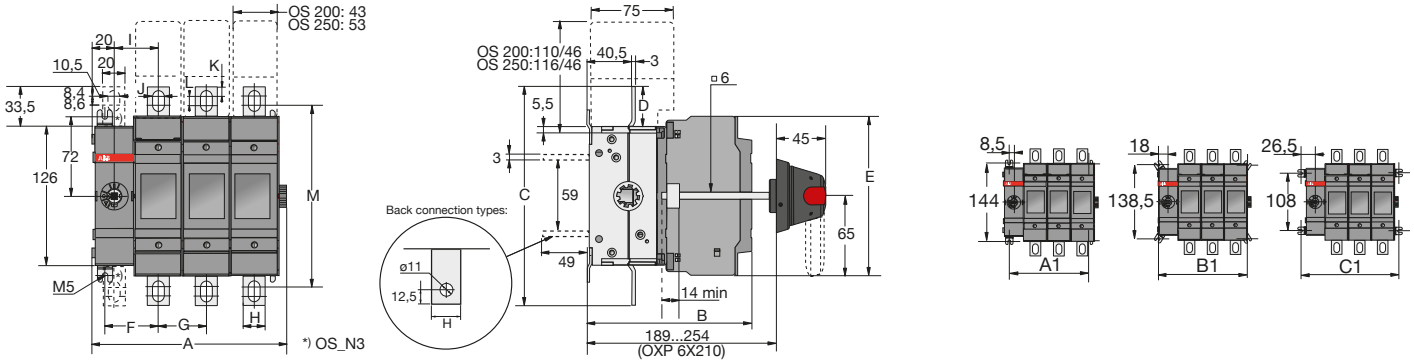

OS200_BB_

[mm]	D01	B01	D02	B02	D03	B03	D04	B04
A	89,5	89,5	133	133	176,5	176,5	220	220
B	149	130	149	130	149	130	149	149
C	198,5	198,5	198,5	198,5	198,5	198,5	198,5	198,5
D	36,5	36,5	36,5	36,5	36,5	36,5	36,5	36,5
E	144,5	144,5	144,5	144,5	144,5	144,5	144,5	144,5
F	48,5	48,5	48,5	48,5	48,5	48,5	48,5	48,5
G	-	-	43,5	43,5	43,5	43,5	43,5	43,5
H	20	20	20	20	20	20	20	20
I	40	40	40	40	40	40	40	40
J	10	10	10	10	10	10	10	10
K	8,4	8,4	8,4	8,4	8,4	8,4	8,4	8,4
L	8,6	8,6	8,6	8,6	8,6	8,6	8,6	8,6
M	164,5	164,5	164,5	164,5	164,5	164,5	164,5	164,5
A1	60,5	60,5	104	104	147,5	147,5	191	191
B1	79,5	79,5	123	123	166,5	166,5	210	210
C1	96,5	96,5	140	140	183,5	183,5	227	227

OS250_BB_

[mm]	D01/B01	D02/B02	D03/B03	D04/B04
A	99,5	153,5	207,5	261,5
B	154	154	154	154
C	193	193	193	193
D	33,5	33,5	33,5	33,5
E	148,5	148,5	148,5	148,5
F	53,5	53,5	53,5	53,5
G	-	54	54	54
H	25	25	25	25
I	45	45	45	45
J	11	1	11	11
K	11,5	11,5	11,5	11,5
L	4	4	4	4
M	162	162	162	162
A1	70,5	124,5	178,5	232,5
B1	89,5	143,5	197,5	251,5
C1	106,5	160,5	214,5	268,5

M00008/OS200_250_01_04 K / M07023

Dimension drawings
Special connected switch fuses

OS315_12/22_ and OS400_12/22 (BB)

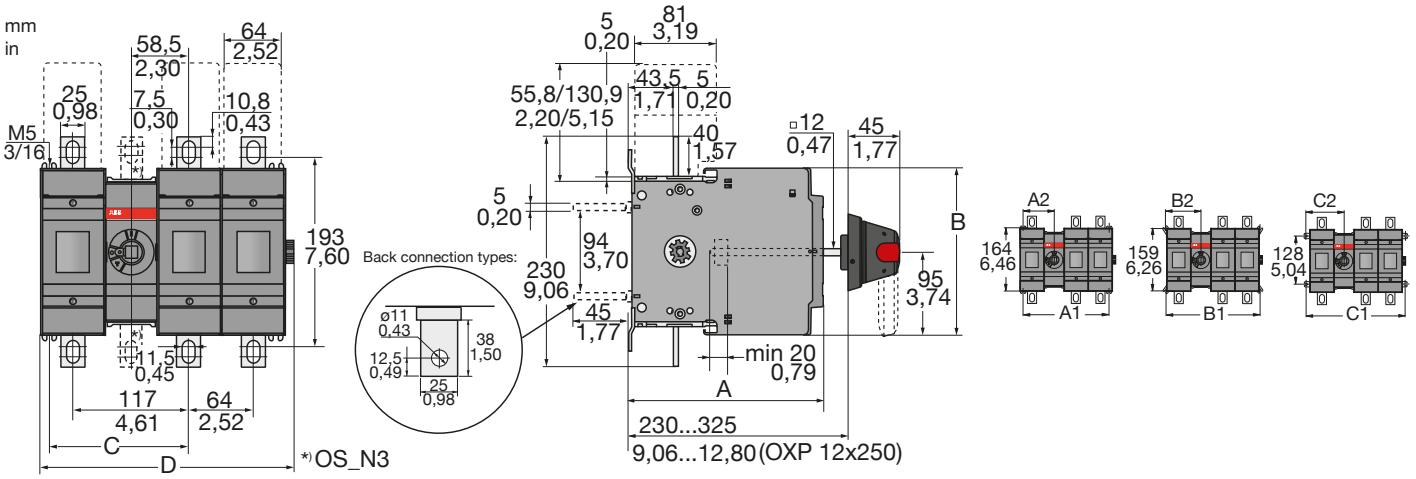

OS315-400_BB_					
[mm]	B11	B12	B13	B21	B22
A	176	176	176	176	176
B	194	194	194	194	194
C	140	140	140	204	204
D	190	254	318	254	318

OS400_BB_					
[mm]	D11	D12	D13	D21	D22
A	193	193	193	193	193
B	166	166	166	166	166
C	140	140	140	204	204
D	190	254	318	254	318

[mm/in]	J11	J12	J13	J21	J22
A	176/6,93	176/6,93	176/6,93	176/6,93	176/6,93
B	194/7,64	194/7,64	194/7,64	194/7,64	194/7,64
C	140/5,51	140/5,51	140/5,51	204/8,03	204/8,03
D	190/7,48	254/10,00	318/12,52	254/10,00	318/12,52

D / M07024

OS315_BB_					
[mm]	B11	B12	B21	B22	B13
A1	163	227	227	291	291
A2	81,5	81,5	145,5	145,5	81,5
B1	181	245	245	309	309
B2	90,5	90,5	154,5	154,5	90,5
C1	199	263	263	327	327
C2	99,5	99,5	163,5	163,5	99,5

OS400_BB_				
[mm/in]	B11/D11/J11	B12/D12/J12	B21/D21/J21	B22/D22/J22	B13/D13/J13
A1	163/6,42	227/8,94	227/8,94	291/11,46	291/11,46
A2	81,5/,21	81,5/3,21	145,5/5,73	145,5/5,73	81,5/3,21
B1	181/7,13	245/9,65	245/9,65	309/12,17	309/12,17
B2	90,5/3,56	90,5/3,56	154,5/6,08	154,5/6,08	90,5/3,56
C1	199/7,83	263/10,35	263/10,35	327/12,87	327/12,87
C2	99,5/3,92	99,5/3,92	163,5/6,44	163,5/6,44	99,5/3,92

C000011/OS315-400_11_22

OS315_03/04_ and OS400_03/04 (BB)

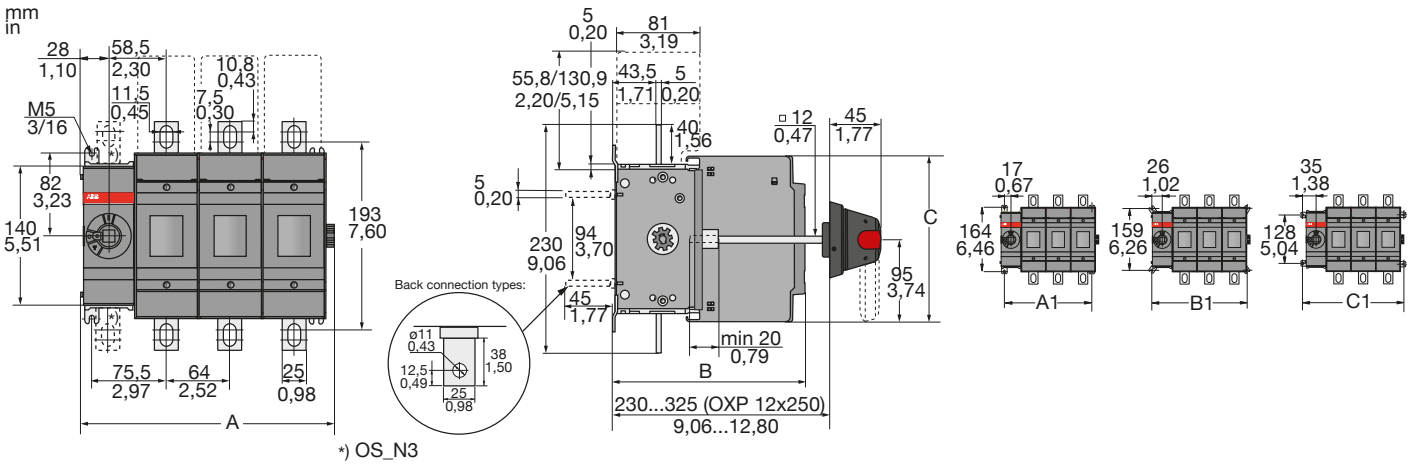

OS315 - 400_BB_				
[mm]	B01	B02	B03	B04
A	127	191	255	319
B	176	176	176	176
C	194	194	194	194

OS400_BB_				
[mm/in]	J01	J02	J03	J04
A	127/5,00	191/7,52	255/10,04	319/12,56
B	176/6,93	176/6,93	176/6,93	176/6,93
C	194/7,64	194/7,64	194/7,64	194/7,64

D / M07025

OS400_BB_				
[mm]	D01	D02	D03	D04
A	127	191	255	319
B	193	193	193	193
C	166	166	166	166

OS315_BB_				
[mm]	B01	B02	B03	B04
A1	98,5	162,5	226,5	290,5
B1	116,5	180,5	244,5	308,5
C1	134,5	198,5	262,5	326,5

OS400_BB_				
[mm/in]	B01/D01/J01	B02/D02/J02	B03/D03/J03	B04/D04/J04
A1	98,5/3,88	162,5/6,40	226,5/8,92	290,5/11,44
B1	116,5/4,59	180,5/7,11	244,5/9,63	308,5/12,15
C1	134,5/5,30	198,5/7,81	262,5/10,33	326,5/12,85

C000012 /OS315_400_01_04

Dimension drawings
Special connected switch fuses

OS125G...160GD12LR (LR)

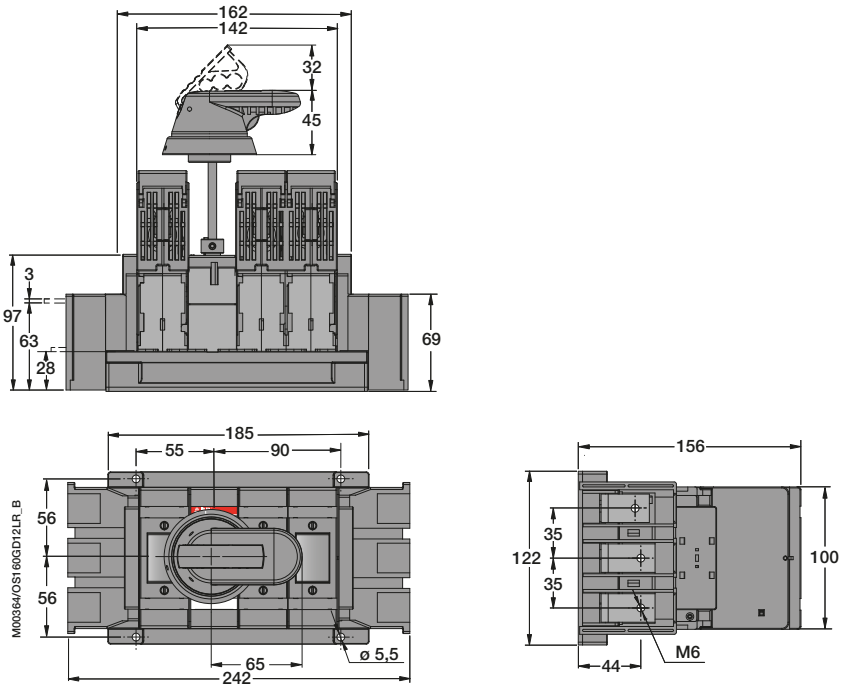

OS125G...160GD21LR (LR)

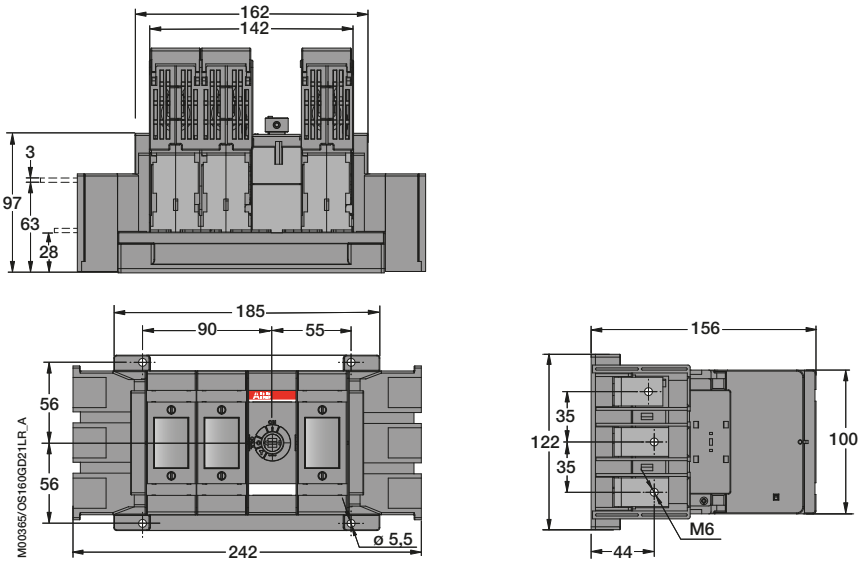

Dimension drawings
Special connected switch fuses

OS125G...160GD22LR (LR)

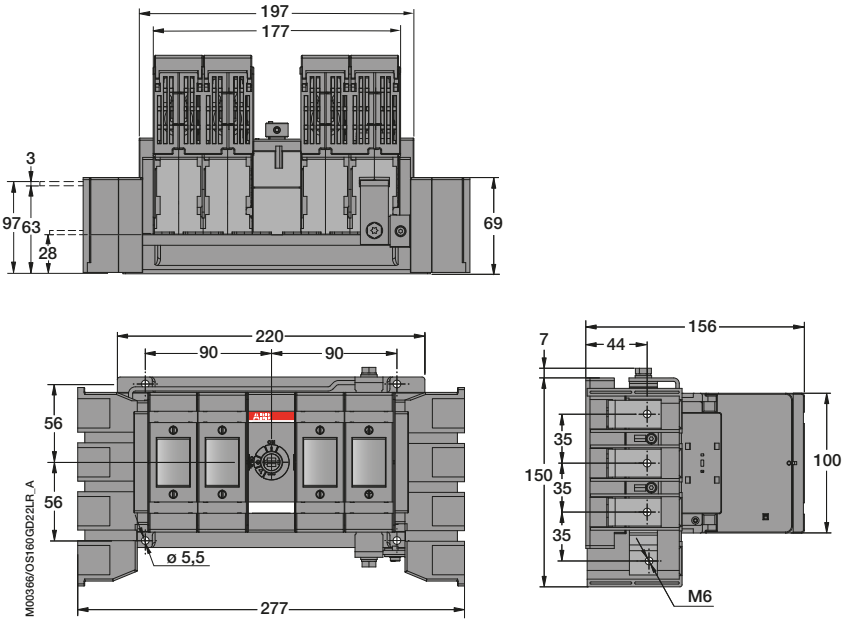

OS125G...160GB12LR (LR)

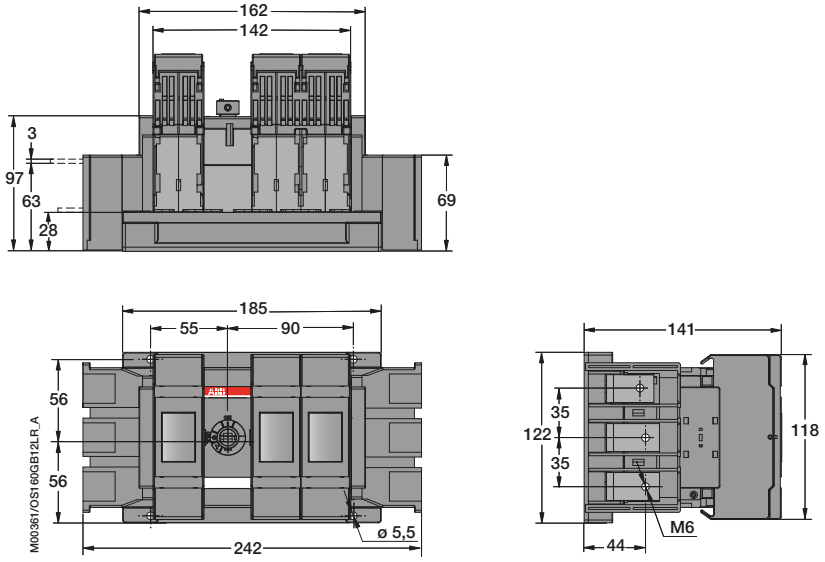

Dimension drawings
Special connected switch fuses

OS125G...160GB21LR (LR)

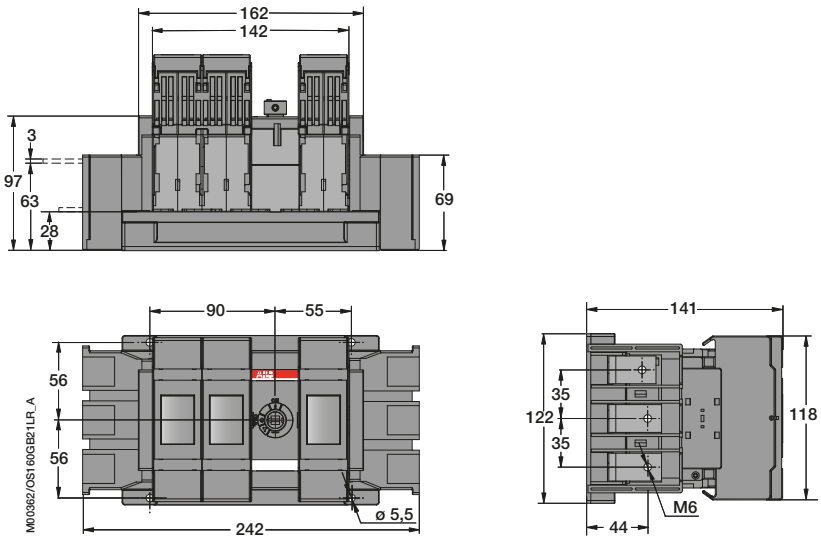

OS125G...160GB22LR (LR)

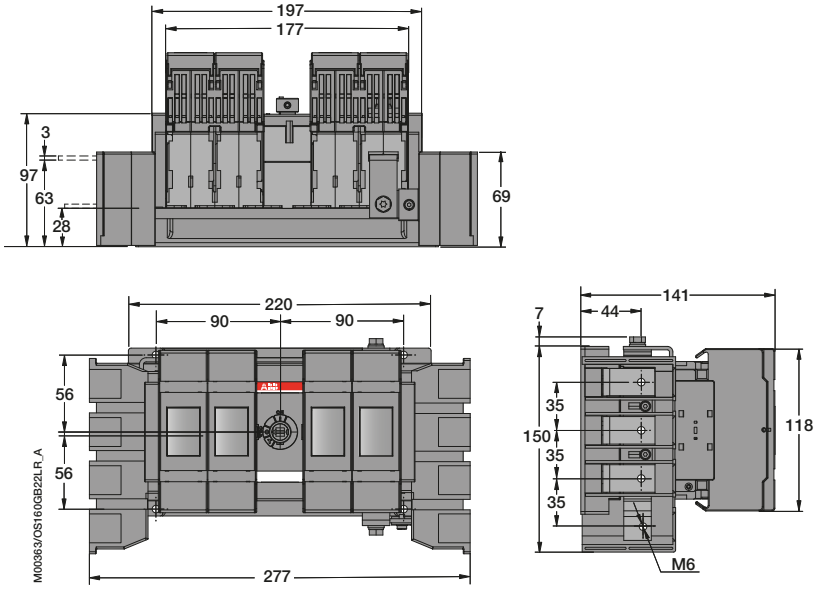

Dimension drawings
Special connected switch fuses

OS125G...160G_21LR + OSS160G$^{G}_{T}$3LS

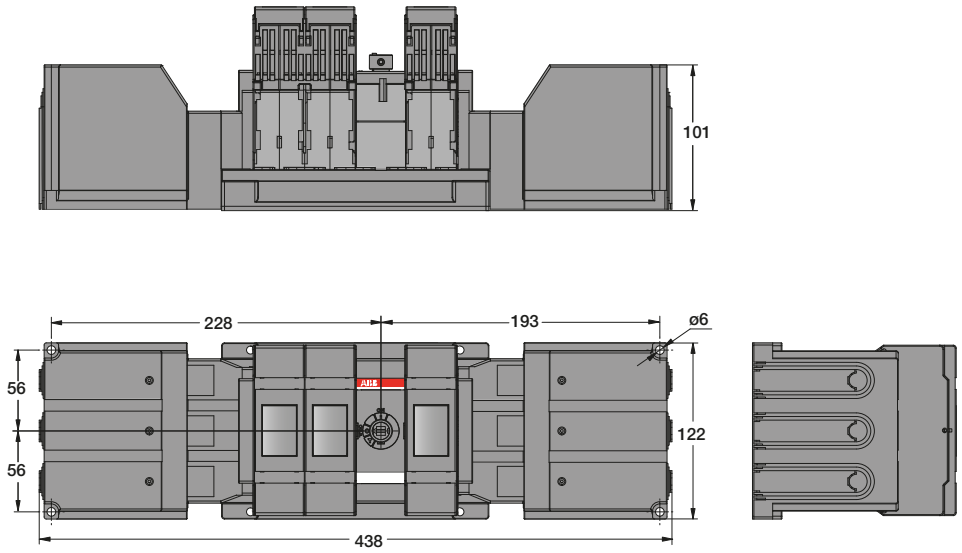

OS125G...160G_22LR + OSS160G$^{G}_{T}$4LS

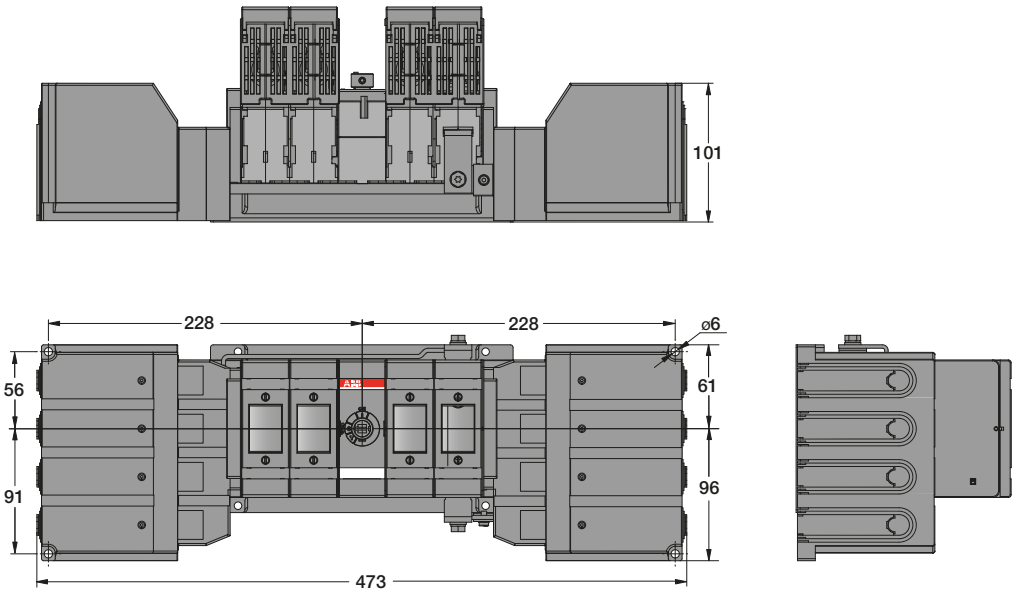

Dimension drawings
Special connected switch fuses

OS200B12_ and OS250_12_ (LR)

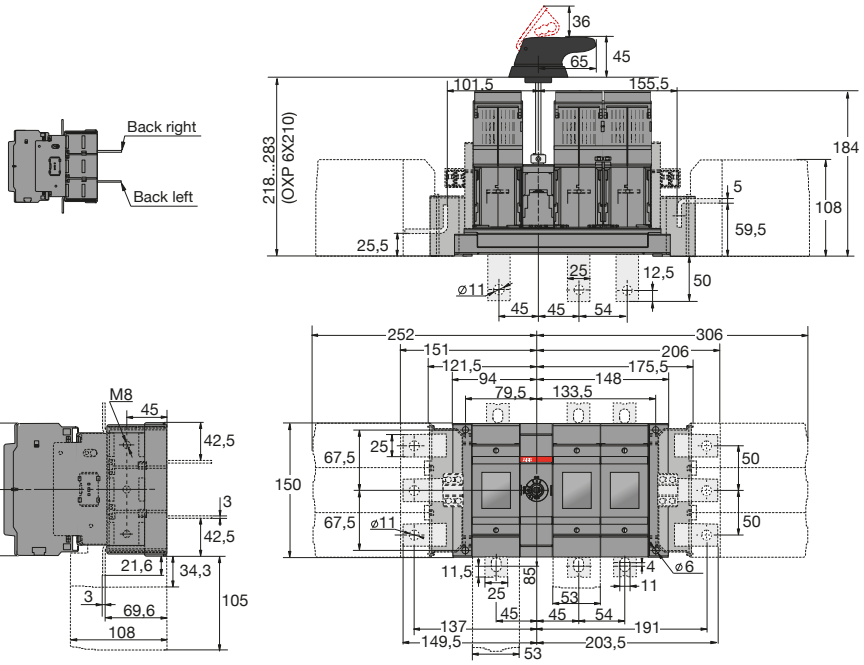

M00120/OS250_12BL-BR B / M07026

OS200B...250_LR, 3-pole
OS200B12LR
OS250B12LR
OS250D12LR

OS200B21_ and OS250_21_ (LR)

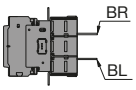

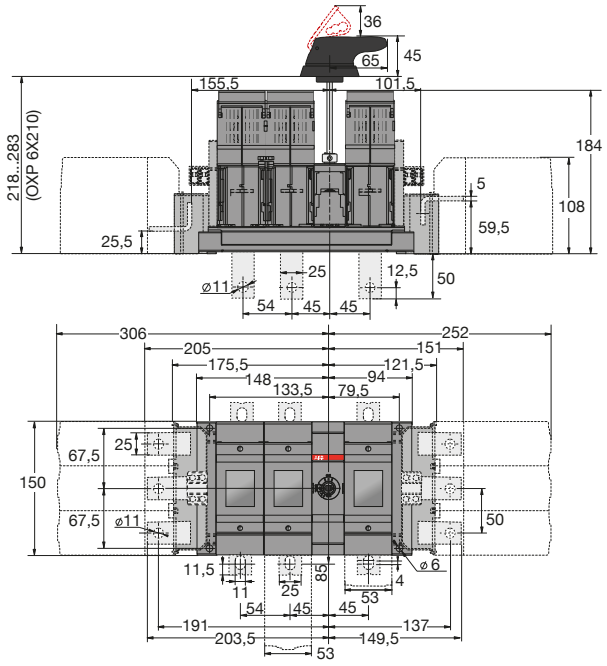

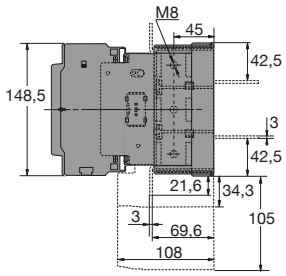

M00119/OS250_21BD-BR B / M07027

OS200B...250_LR, 3-pole
OS200B21LR
OS250B21LR
OS250D21LR

Dimension drawings
Special connected switch fuses

OS315B12_ and OS400_12_ (LR)

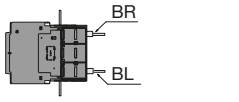

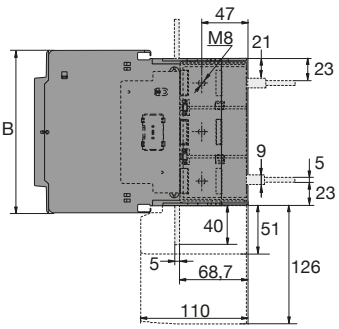

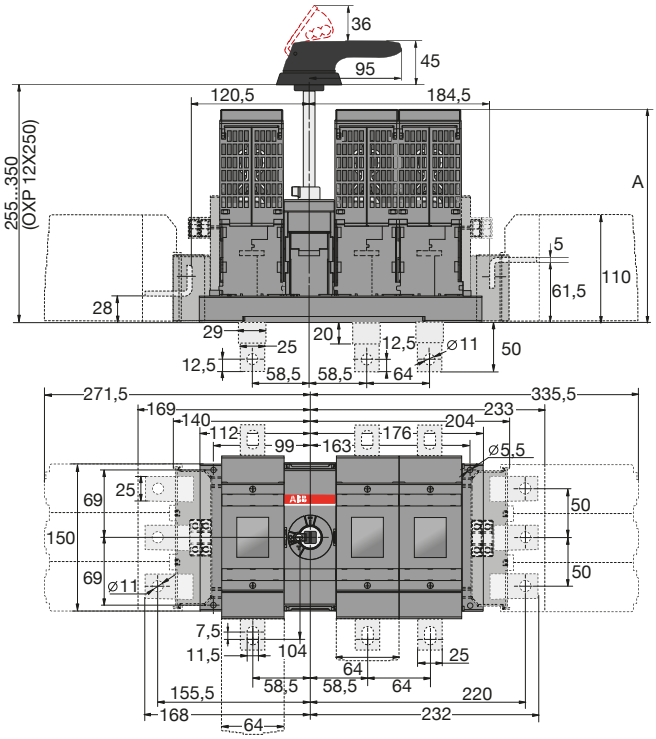

M00130/OS400_12BL-BR C / M07028

OS315B...400_LR

	A	B
OS315B12LR	201	194
OS400B12LR	201	194
OS400D12LR	218	166

OS315B21_ and OS400_21_ (LR)

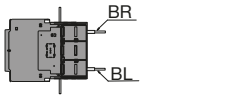

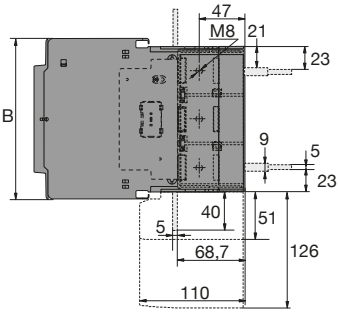

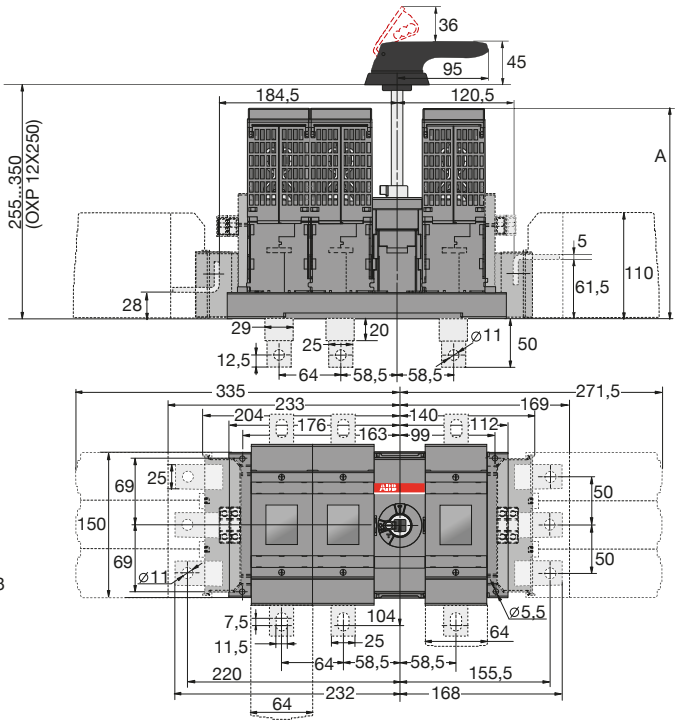

M00127/OS400_21BL-BR C / M07029

OS315B...400_LR

	A	B
OS315B21LR	201	194
OS400B21LR	201	194
OS400D21LR	218	166

Dimension drawings
Special connected switch fuses

OS315B22_N2 and OS400_22_N2 (LR)

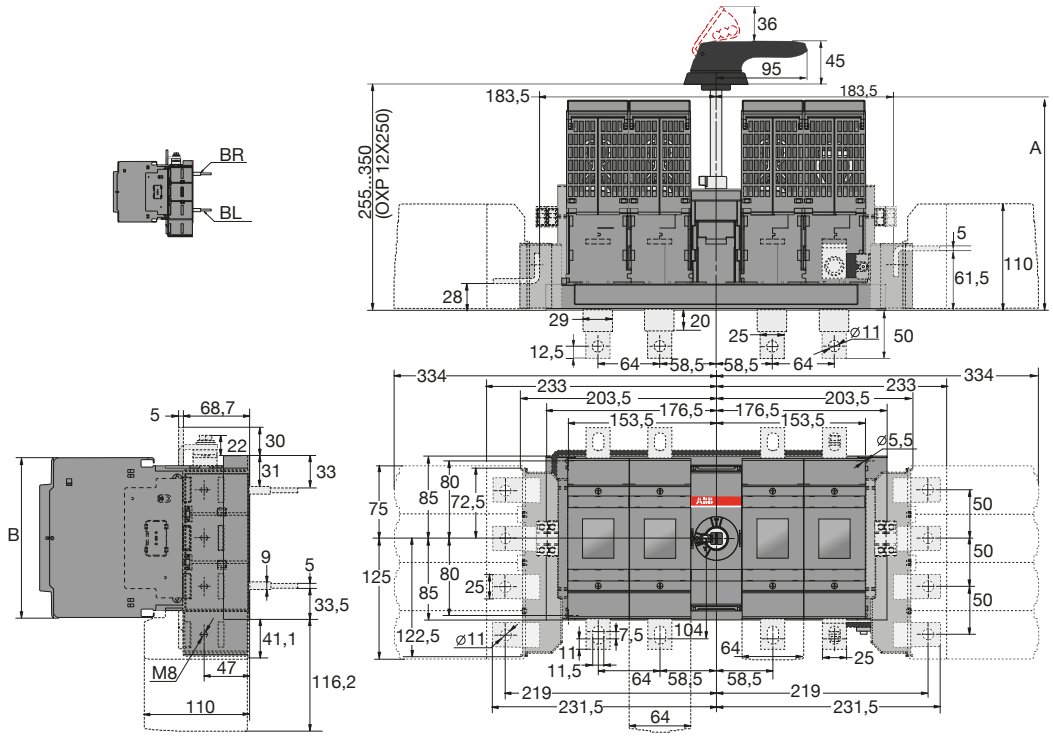

OS315B...400_LR

	A	B
OS315B22LR	201	194
OS400B22LR	201	194
OS400D22LR	218	166

M00126/OS400-22BL-BRN2 C / M07030

Dimension drawings
Motorized switch fuses

OSM32...63_M_

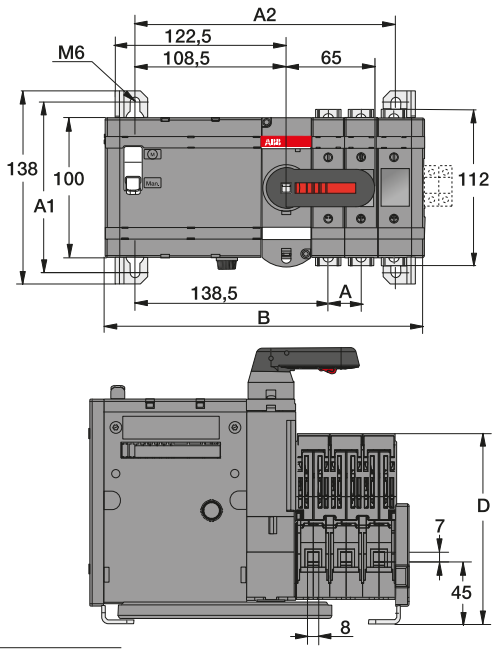

OSM32-63_M_

[mm]	D3	D4	B/F3	B/F4
A	23,5	23,5	23,5	23,5
A1	122	122	122	122
A2	187,5	211	187,5	211
B	229	252,5	229	252,5
C	100	100	100	100
D	136,5	136,5	124,5	124,5

M00293 / OSM32-63-M A

OSM100...160_M_

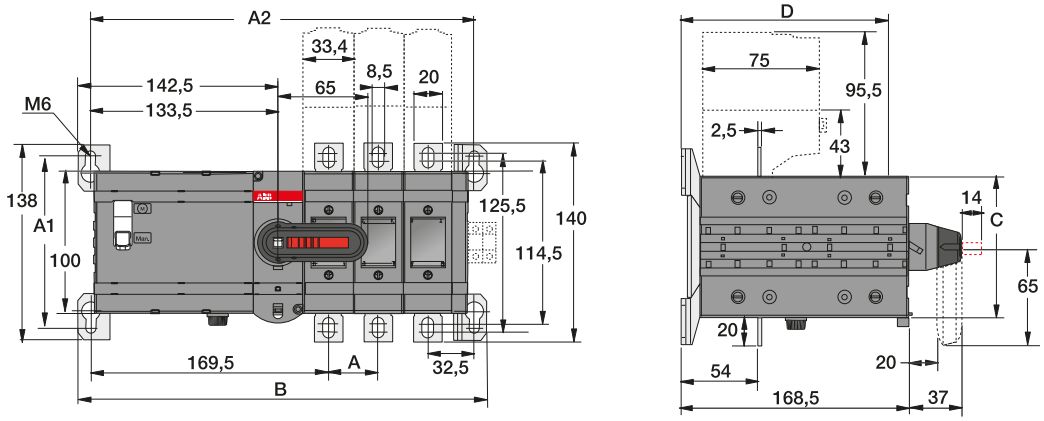

OSM100-160_M_

[mm]	D/F3	D/F4	B3	B4
A	35	35	35	35
A1	122	122	122	122
A2	272	307	272	307
B	290	325	290	325
C	100	100	118	188
D	146	146	130,5	130,5

M00294 / OSM100-160-M A

Dimension drawings
Motorized switch fuses

OSM200_M_

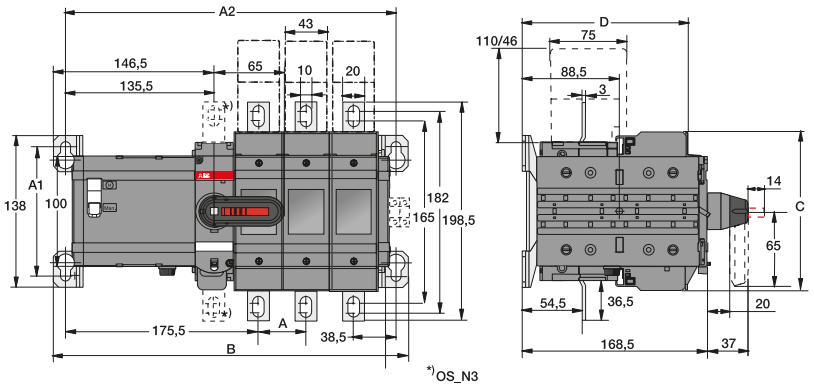

OSM200_M_

[mm]	B3	B4	D3	D4
A	43,5	43,5	43,5	43,5
A1	118	118	118	118
A2	301,5	345	301,5	345
B	323,5	367	323,5	367
C	144,5	144,5	144,5	144,5
D	132	132	151	151

M001997 OSM200-M B

OSM250_M_

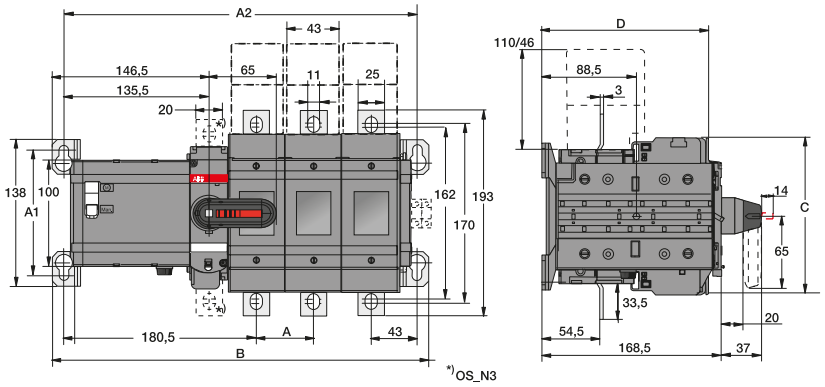

OSM250_M_

[mm]	D3/B3	D4/B4
A	54	54
A1	118	118
A2	332	386
B	354	408
C	148,5	148,5
D	156	156

M00198 / OSM250-M B

Dimension drawings
Motorized switch fuses

OSM315...400_M_

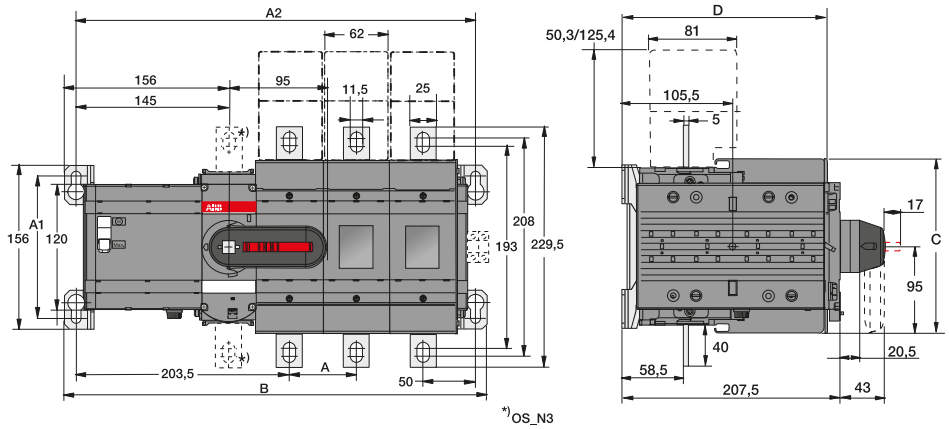

M00199/ OSM315-400-M C

OSM315_M_		
[mm]	B3	B4
A	64	64
A1	136	136
A2	382	446
B	404	468
C	194	194
D	178,5	178,5

OSM400_M_				
[mm]	B3	B4	D3	D4
A	64	64	64	64
A1	136	136	136	136
A2	382	446	382	446
B	404	468	404	468
C	194	194	166	166
D	178,5	178,5	196,5	196,5

OSM630...800_M_

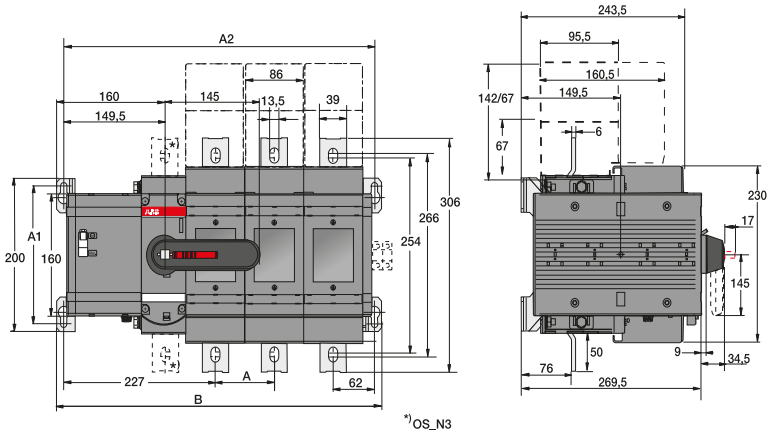

M00206 / OSM630-800-M B

OSM630-800_M_		
[mm]	D3/B3	D4/B4
A	88	88
A1	180	180
A2	465,5	553,5
B	486,5	574,5

Dimension drawings
Motorized switch fuses

OSM1250_M_

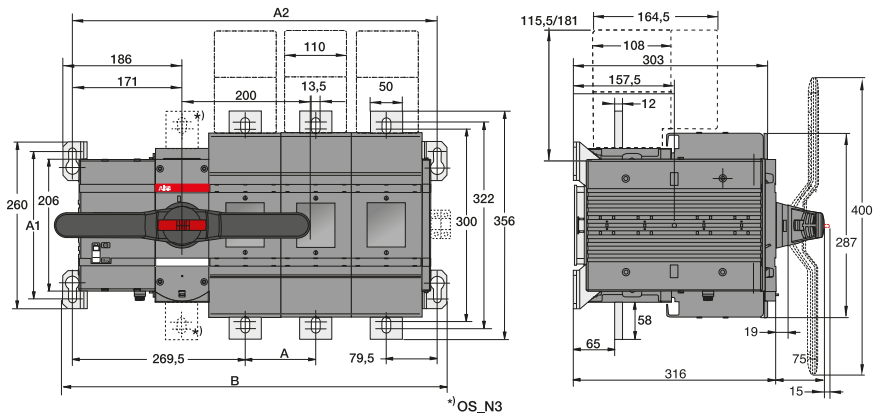

M00238 / OSM1250-M C

OSM1250_M_		
[mm]	B3/D3	B4/D4
A	110	110
A1	230	230
A2	569,5	679,5
B	599,5	709,5

Dimension drawings
Accessories

Plastic handles

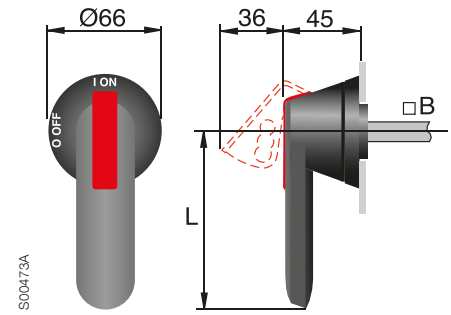

Door drilling for OH_ handles:

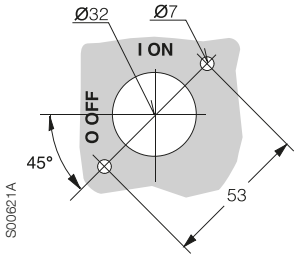

Handle type	B shaft diameter [mm]	Length L [mm]
OH_45J6	6	45
OH_65J6	6	65
OH_95J12	12	95
OH_125J12	12	125
OH_145J12	12	145
OH_175J12	12	175
OH_275J12	12	275

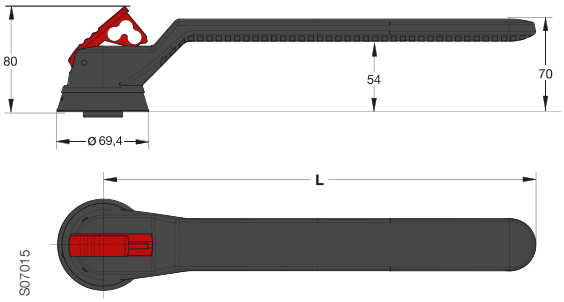

Handle type	Length L [mm]
OH_274J12	274
OH_330J12	330

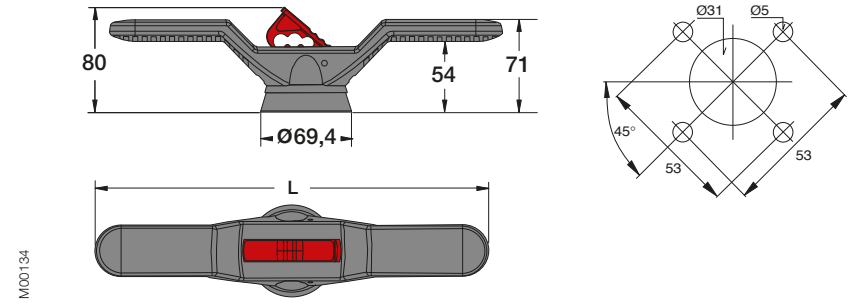

Handle type	Length L [mm]
OHB150J12P	300
OHB200J12P	400

Stainless steel handles

OHM_

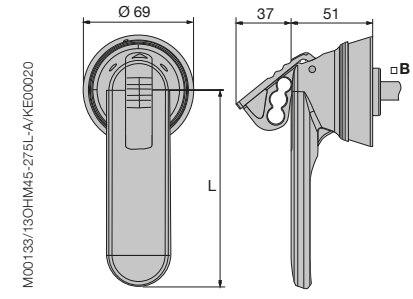

Door drilling for OHM_

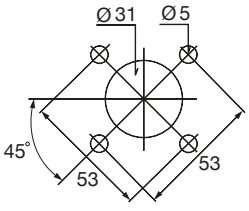

Handle type	B shaft diameter [mm]	Lenght L [mm]
OHM65L6	6	65
OHM125L12	12	125
OHM175L12	12	175
OHM275L12	12	275

Dimension drawings
Accessories

Metallic handles

YASDA7, 8 (A=220)

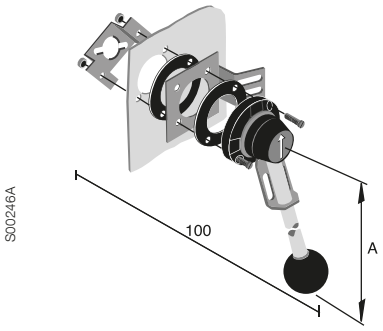

Door drilling for YASDA:

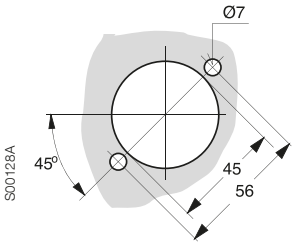

Minimum distance L between the hinge and the rotating shaft

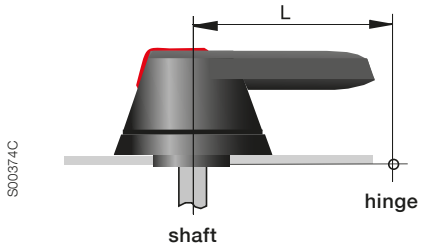

Sizes [A]	Length L [mm]	Handle type
30...250	60	OH_65J6
315...400	95	OH_95J12
630...800	150	OH_125J12, OH_145J12
630...800	175	OH_175J12
630...800	275	OH_275J12
630...800	220	YASDA7, 8
1200...1250	274	OH_274J12
1200...1250	330	OH_330J12

6 and 8-pole switch fuses

OESAZW2

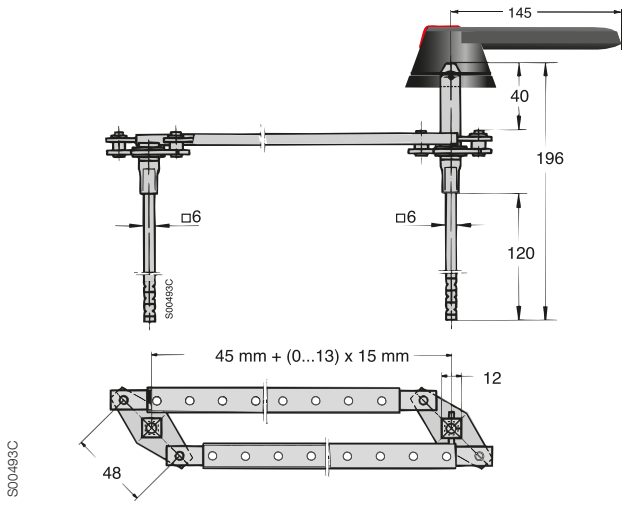

OETLZW9

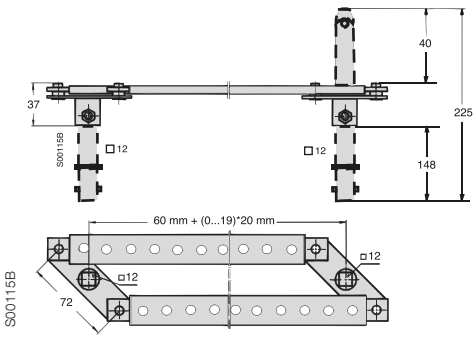

Dimension drawings
Accessories

Mechanical interlock

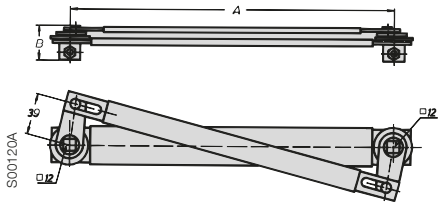

OETLZX3, 14, 15

	OETLZW3	OETLZW14	OETLZW15
A	300	250	500
B	31	31	36

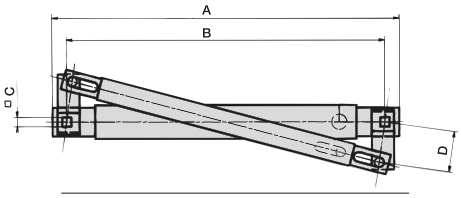

OTZW10, 24

	OTZW10	OTZW24
A	206	114
B	190	100
C	6	5
D	30	25

Change-over and by-pass switch fuses

OETLZW11

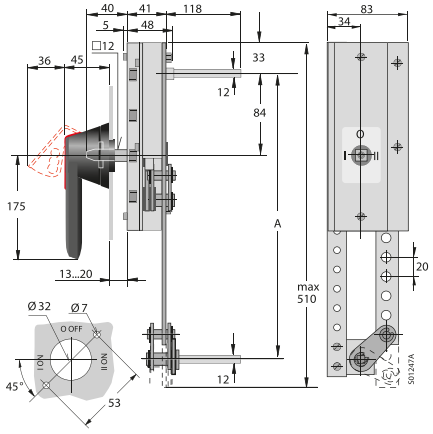

S01247A

OETLZW11

	OETLZW11
A	210+(0...11)x20 mm

OETLZW12, 13

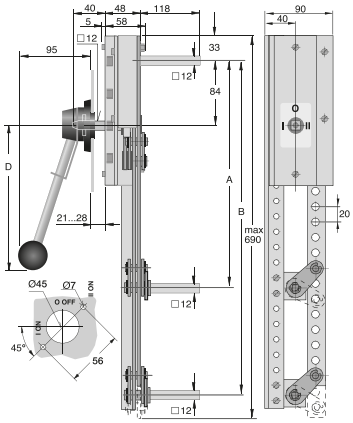

S00117B

OETLZW12, 13

	OETLZW12	OETLZW13
A	210+(0...18)x20 mm	210+(0...18)x20 mm
B		250+(0...18)x20 mm
D	220 mm	320 mm

OTZW 25

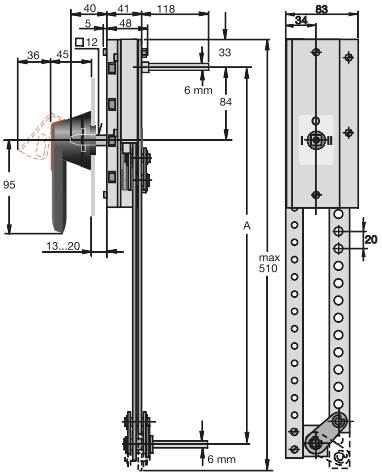

A00213_B

OTZW25

A	210+(0...18)x20mm

OTZW 26

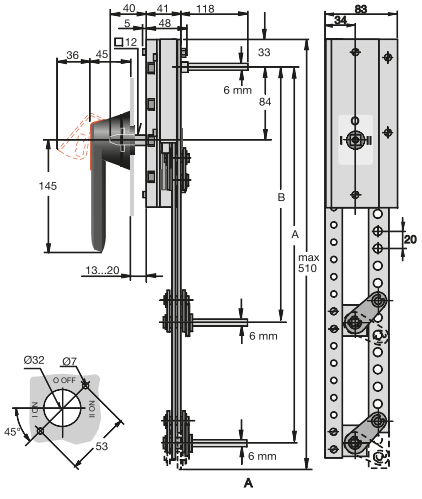

OTZW26

A	210+(0...9)x20mm
B	210+(0...9)x20mm

Contact functions

Handle indications and functions

– The handle indicates the position of the contacts with complete reliability in all situations. If the contacts are welded together, the handle doesn´t reach the OFF-position but remains between ON and OFF, maintaining the door interlock and padlocking is not possible to do.
– When operating the switch fuse to the Test-position with a test handle the testauxiliary contacts change position. The main contacts remain open.

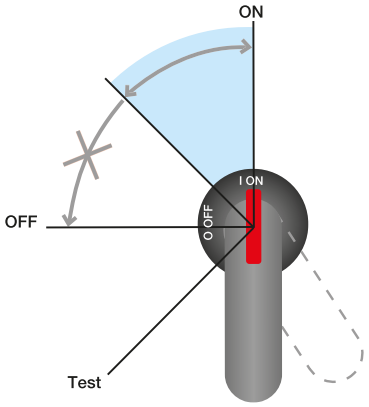

ON and OFF-functions of main and auxiliary contacts

Example

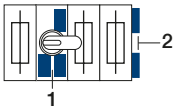

Places of auxiliary contacts and Test ind.

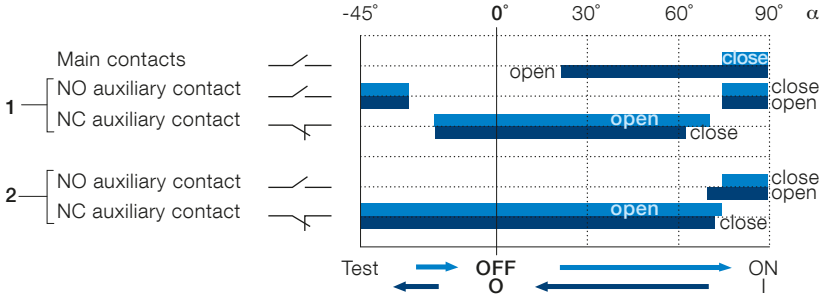

OS Mini

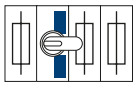

OA4B1C, 1 NO-NC

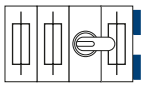

OA1G10, 1NO
OA3G01, 1NC

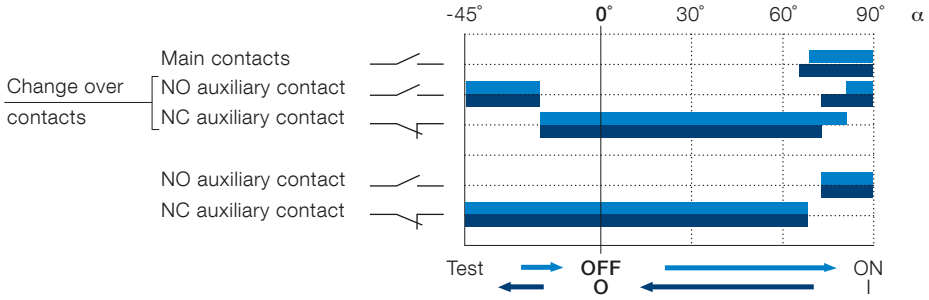

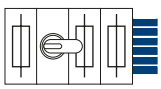

MCB-10 + OESAZX169, 1NO
MCB-01 + OESAZX169, 1NC

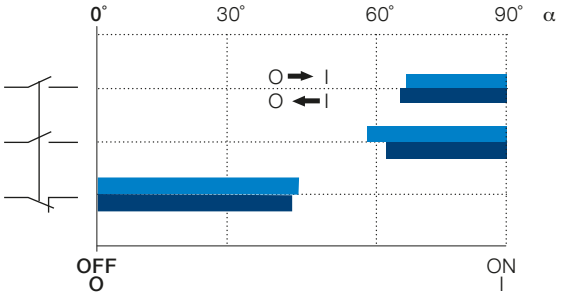

S012012

Contact functions

OS/OSM32G...1250

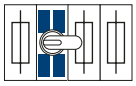

OS_, OSM

OA1G10, 1NO
OA3G01, 1NC

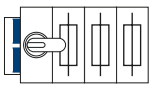

OS_

OA1G10, 1NO
OA3G01, 1NC
+ OEA28

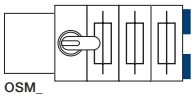

OSM_

OA1G10, 1NO
OA3G01, 1NC

S07188A

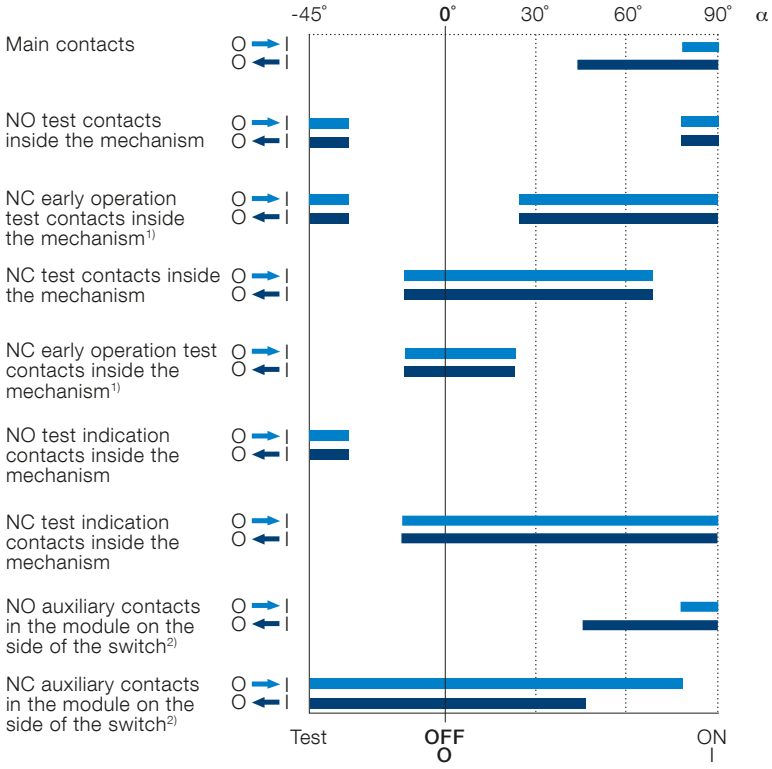

1) OS/OSM1200...1250 only
2) Also OSM32G...1250 mounted on the right side of the switch

Index

Type	Order number	Description	Page
MCB-01	1SCA022150R5370	Auxiliary contact	65
MCB-10	1SCA022150R5110	Auxiliary contact	65
OA1G10	1SCA022353R4970	Auxiliary contact	65
OA1G10	1SCA022353R4970	Auxiliary contact	66
OA1G10AU	1SCA022436R7910	Auxiliary contact	65
OA1G10AU	1SCA022436R7910	Auxiliary contact	66
OA3G01	1SCA022456R7410	Auxiliary contact	65
OA3G01	1SCA022456R7410	Auxiliary contact	66
OA3G01AU	1SCA022819R5260	Auxiliary contact	65
OA3G01AU	1SCA022819R5260	Auxiliary contact	66
OA4B01	1SCA022276R9210	Auxiliary contact	65
OA4B10	1SCA022276R9050	Auxiliary contact	65
OA4B1C	1SCA022193R0150	Auxiliary contact	65
OEA28	1SCA022714R8810	Module for auxiliary contacts	67
OESAZG5	1SCA022057R1380	Solid link	70
OESAZG98	1SCA022354R9650	Solid link	70
OESAZK98	1SCA022067R7370	Solid link	70
OESAZL79	1SCA022067R7110	Solid link	70
OESAZS175	1SCA022354R9570	Solid link	70
OESAZS36	1SCA022044R4600	Solid link	70
OESAZW2	1SCA022078R1600	Conversion kit for combination switches	76
OESAZX160	1SCA022186R3960	Neutral link	69
OESAZX162	1SCA022193R0400	Neutral link	69
OESAZX164	1SCA022202R9520	Neutral link	69
OESAZX165	1SCA022202R9790	Neutral link	69
OESAZX169	1SCA022196R9360	Mounting frame for auxiliary contacts	65
OESAZX171	1SCA022197R2580	Neutral link	69
OETLZK19	1SCA022093R1850	Adapter for extension socket	64
OETLZW11	1SCA022078R0030	Conversion kit for combination switches	76
OETLZW12	1SCA022078R0200	Conversion kit for combination switches	76
OETLZW13	1SCA022078R0460	Conversion kit for combination switches	76
OETLZW14	1SCA022077R3410	Conversion kit for combination switches	76
OETLZW15	1SCA022081R9340	Conversion kit for combination switches	76
OETLZW16	1SCA022095R2070	Cam attachment	80
OETLZW3	1SCA022049R0380	Conversion kit for combination switches	76
OETLZW5	1SCA022052R3900	Cam attachment	80
OETLZW9	1SCA022061R3300	Conversion kit for combination switches	76
OETLZX95	1SCA022083R5620	Shaft extension socket	64
OEZNL1	1SCA022723R7400	Solid link	70
OEZNL10	1SCA116437R1001	Solid link	70
OEZNL8	1SCA113998R1001	Solid link	70
OEZXU14/3	1SCA100361R1001	Terminal angle for side terminals	72
OEZXU14/4	1SCA101082R1001	Terminal angle for side terminals	72
OEZXU68/3	1SCA121380R1001	Terminal angle for side terminals	72
OEZXU68/4	1SCA121379R1001	Terminal angle for side terminals	72
OFAE 504	1SCA022007R6880	Fuse replacement handle	61
OFAE 505	2CMA125276R1000	Fuse replacement handle	61
OFAW00	1SCA022003R9680	Solid link	70
OFAW1	1SCA022003R9760	Solid link	70
OFAW2	1SCA022003R9840	Solid link	70
OFAW3	1SCA022003R9920	Solid link	70
OFD110EA	1SCA121775R1001	Electronic fuse monitor	78
OFD500EA	1SCA121776R1001	Electronic fuse monitor	78
OFM260	1SCA022459R8560	Electronic fuse monitor	78
OFM690	1SCA022459R8480	Electronic fuse monitor	78
OFMZX2	1SCA022475R9910	Crimp terminal	78
OFS260	1SCA022716R0180	Electronic fuse monitor	78
OFS690	1SCA022715R9920	Electronic fuse monitor	78
OHB125J12	1SCA022381R1560	Handle	58
OHB125J12T	1SCA022652R2220	Handle	58
OHB145J12	1SCA022381R2110	Handle	58
OHB145J12E00S	1SCA022679R9700	Handle	60
OHB145J12T	1SCA022652R2570	Handle	58
OHB150J12P	1SCA022865R9430	Handle	59
OHB175J12	1SCA022381R2450	Handle	58
OHB175J12T	1SCA022708R0740	Handle	58
OHB200J12P	1SCA022865R9510	Handle	59
OHB200J12PT	1SCA106510R1001	Handle	59
OHB274J12	1SCA115920R1001	Handle	59
OHB274J12T	1SCA120250R1001	Handle	59
OHB330J12	1SCA115922R1001	Handle	59
OHB330J12T	1SCA120252R1001	Handle	59
OHB4	1SCA022439R4050	Handle	61
OHB45J6	1SCA022380R8770	Handle	58
OHB45J6T	1SCA109870R1001	Handle	58
OHB65J6	1SCA022380R9660	Handle	58
OHB65J6E00S	1SCA022382R9850	Handle	60
OHB65J6T	1SCA022399R8110	Handle	58
OHB65J6TE00S	1SCA109016R1001	Handle	60
OHB80J6	1SCA022381R0240	Handle	58
OHB80J6T	1SCA022399R8290	Handle	58
OHB95J12	1SCA022381R0830	Handle	58
OHB95J12T	1SCA022736R1750	Handle	58
OHG125J12	1SCA022381R1640	Handle	58
OHG145J12	1SCA022381R2290	Handle	58
OHG175J12	1SCA022381R2610	Handle	58
OHG45J6	1SCA022380R8850	Handle	58
OHG65J6	1SCA022380R9740	Handle	58
OHG65J6E00S	1SCA022383R4510	Handle	60
OHG65J6T	1SCA022456R9620	Handle	58
OHG65J6TE00S	1SCA109014R1001	Handle	60
OHG95J12	1SCA022381R0910	Handle	58
OHM125L12	1SCA022739R1150	Handle	59
OHM175L12	1SCA022739R1230	Handle	59
OHM275L12	1SCA022832R4840	Handle	59
OHM65L6	1SCA022739R1070	Handle	59
OHY125J12	1SCA022381R1720	Handle	58
OHY125J12T	1SCA022652R2310	Handle	58
OHY145J12	1SCA022381R2370	Handle	58
OHY145J12T	1SCA022652R2650	Handle	58
OHY150J12P	1SCA101586R1001	Handle	59
OHY175J12	1SCA022381R2700	Handle	58
OHY200J12P	1SCA101587R1001	Handle	59
OHY200J12PT	1SCA111512R1001	Handle	59
OHY274J12	1SCA115919R1001	Handle	59
OHY330J12	1SCA115921R1001	Handle	59
OHY45J6	1SCA022380R8930	Handle	58
OHY65J6	1SCA022380R9820	Handle	58
OHY65J6E00S	1SCA022382R9930	Handle	60
OHY65J6T	1SCA022456R9540	Handle	58
OHY65J6TE00S	1SCA022688R0140	Handle	60
OHY95J12	1SCA022381R1050	Handle	58
OHY95J12T	1SCA022736R1910	Handle	58
OHZX14	1SCA022851R6590	Extension ring	60
OS100GB02P	1SCA116723R1001	Front operated switch fuse	33
OS100GB03K	1SCA116747R1001	Front operated switch fuse	36
OS100GB03P	1SCA114613R1001	Front operated switch fuse	33
OS100GB04N1K	1SCA116748R1001	Front operated switch fuse	36
OS100GB04N1P	1SCA114614R1001	Front operated switch fuse	33
OS100GB11P	1SCA116851R1001	Front operated switch fuse	31

Type	Order number	Description	Page
OS100GB12P	1SCA114586R1001	Front operated switch fuse	31
OS100GB22N1P	1SCA114602R1001	Front operated switch fuse	31
OS100GBS30	1SCA116758R1001	Side operated switch fuse	40
OS100GBS40N1	1SCA116759R1001	Side operated switch fuse	40
OS100GBS40N2	1SCA116760R1001	Side operated switch fuse	40
OS100GJ03P	1SCA114639R1001	Front operated fusible disconnect switch	49
OS100GJ04FP	1SCA115439R1001	Front operated fusible disconnect switch	49
OS100GJ04N1P	1SCA115909R1001	Front operated fusible disconnect switch	49
OS100GJ12P	1SCA115666R1001	Front operated fusible disconnect switch	49
OS100GJ22FP	1SCA114636R1001	Front operated fusible disconnect switch	49
OS100GJ22N1P	1SCA115910R1001	Front operated fusible disconnect switch	49
OS100GJS30	1SCA115971R1001	Side operated fusible disconnect switch	52
OS100GJS30K	1SCA115942R1001	Side operated fusible disconnect switch	51
OS100GJS40F	1SCA115972R1001	Side operated fusible disconnect switch	52
OS100GJS40FK	1SCA115943R1001	Side operated fusible disconnect switch	51
OS100GJS40N1	1SCA116764R1001	Side operated fusible disconnect switch	52
OS100GJS40N2	1SCA116765R1001	Side operated fusible disconnect switch	52
OS1200L02P	1SCA116925R1001	Front operated fusible disconnect switch	50
OS1200L03P	1SCA105468R1001	Front operated fusible disconnect switch	50
OS1200L04FP	1SCA105466R1001	Front operated fusible disconnect switch	50
OS1250B02P	1SCA114070R1001	Front operated switch fuse	35
OS1250B03K	1SCA108715R1001	Front operated switch fuse	37
OS1250B03N3P	1SCA107936R1001	Front operated switch fuse	35
OS1250B03P	1SCA105250R1001	Front operated switch fuse	35
OS1250B04N2K	1SCA108717R1001	Front operated switch fuse	37
OS1250B04N2P	1SCA105469R1001	Front operated switch fuse	35
OS1250B12P	1SCA105470R1001	Front operated switch fuse	32
OS1250B22N2P	1SCA107937R1001	Front operated switch fuse	32
OS1250D02P	1SCA114051R1001	Front operated switch fuse	22
OS1250D03K	1SCA108718R1001	Front operated switch fuse	24
OS1250D03N3P	1SCA107932R1001	Front operated switch fuse	22
OS1250D03P	1SCA105475R1001	Front operated switch fuse	22
OS1250D04FP	1SCA105473R1001	Front operated switch fuse	22
OS1250D04N2K	1SCA108719R1001	Front operated switch fuse	24
OS1250D04N2P	1SCA105248R1001	Front operated switch fuse	22
OS1250D12P	1SCA105246R1001	Front operated switch fuse	19
OS1250D22N2P	1SCA107933R1001	Front operated switch fuse	19
OS1250DA02P	1SCA114059R1001	Front operated switch fuse	22
OS1250DA03K	1SCA108720R1001	Front operated switch fuse	24
OS1250DA03N3P	1SCA107934R1001	Front operated switch fuse	22
OS1250DA03P	1SCA105238R1001	Front operated switch fuse	22
OS1250DA04FP	1SCA105240R1001	Front operated switch fuse	22
OS1250DA04N2K	1SCA108721R1001	Front operated switch fuse	24
OS1250DA04N2P	1SCA105243R1001	Front operated switch fuse	22
OS1250DA12P	1SCA105241R1001	Front operated switch fuse	19
OS1250DA22N2P	1SCA107935R1001	Front operated switch fuse	19
OS125GB02P	1SCA116724R1001	Front operated switch fuse	33
OS125GB03BBP	1SCA120783R1001	Special connected switch fuse	43
OS125GB03K	1SCA116751R1001	Front operated switch fuse	36
OS125GB03P	1SCA115634R1001	Front operated switch fuse	33
OS125GB04BBN1P	1SCA122597R1001	Special connected switch fuse	43
OS125GB04N1K	1SCA116752R1001	Front operated switch fuse	36
OS125GB04N1P	1SCA115901R1001	Front operated switch fuse	33
OS125GB11P	1SCA116853R1001	Front operated switch fuse	31
OS125GB12BBP	1SCA120799R1001	Special connected switch fuse	42
OS125GB12LRP	1SCA120258R1001	Special connected switch fuse	44
OS125GB12P	1SCA114603R1001	Front operated switch fuse	31
OS125GB21LRP	1SCA120261R1001	Special connected switch fuse	44
OS125GB22LRP	1SCA120265R1001	Special connected switch fuse	44
OS125GB22N1P	1SCA115903R1001	Front operated switch fuse	31
OS125GBS30	1SCA116048R1001	Side operated switch fuse	40
OS125GBS30K	1SCA116400R1001	Side operated switch fuse	38
OS125GBS40N1	1SCA115959R1001	Side operated switch fuse	40
OS125GBS40N1K	1SCA115926R1001	Side operated switch fuse	38
OS125GBS40N2	1SCA116761R1001	Side operated switch fuse	40
OS125GD02P	1SCA116716R1001	Front operated switch fuse	20
OS125GD03BBP	1SCA120802R1001	Special connected switch fuse	29
OS125GD03K	1SCA116878R1001	Front operated switch fuse	23
OS125GD03P	1SCA115639R1001	Front operated switch fuse	20
OS125GD04BBN2P	1SCA120806R1001	Special connected switch fuse	29
OS125GD04FK	1SCA116741R1001	Front operated switch fuse	23
OS125GD04FP	1SCA115686R1001	Front operated switch fuse	20

Type	Order number	Description	Page
OS125GD04N2K	1SCA116740R1001	Front operated switch fuse	23
OS125GD04N2P	1SCA115877R1001	Front operated switch fuse	20
OS125GD11P	1SCA116712R1001	Front operated switch fuse	18
OS125GD12BBP	1SCA120808R1001	Special connected switch fuse	28
OS125GD12LRP	1SCA120062R1001	Special connected switch fuse	30
OS125GD12P	1SCA115641R1001	Front operated switch fuse	18
OS125GD21LRP	1SCA120255R1001	Special connected switch fuse	30
OS125GD22FP	1SCA116732R1001	Front operated switch fuse	18
OS125GD22LRP	1SCA120263R1001	Special connected switch fuse	30
OS125GD22N2P	1SCA115880R1001	Front operated switch fuse	18
OS125GDS30	1SCA115966R1001	Side operated switch fuse	27
OS125GDS30K	1SCA115933R1001	Side operated switch fuse	25
OS125GDS40F	1SCA116756R1001	Side operated switch fuse	27
OS125GDS40N2	1SCA115967R1001	Side operated switch fuse	27
OS125GDS40N2K	1SCA115934R1001	Side operated switch fuse	25
OS125GF02P	1SCA116727R1001	Front operated switch fuse	45
OS125GF03P	1SCA115602R1001	Front operated switch fuse	45
OS125GF04FP	1SCA115606R1001	Front operated switch fuse	45
OS125GF04N1P	1SCA115888R1001	Front operated switch fuse	45
OS125GF11P	1SCA116726R1001	Front operated switch fuse	45
OS125GF12P	1SCA114624R1001	Front operated switch fuse	45
OS125GF22FP	1SCA115614R1001	Front operated switch fuse	45
OS125GF22N1P	1SCA115893R1001	Front operated switch fuse	45
OS125GFS30	1SCA115973R1001	Side operated switch fuse	47
OS125GFS30K	1SCA115944R1001	Side operated switch fuse	46
OS125GFS40F	1SCA115975R1001	Side operated switch fuse	47
OS125GFS40FK	1SCA115946R1001	Side operated switch fuse	46
OS125GFS40N1	1SCA115974R1001	Side operated switch fuse	47
OS125GFS40N1K	1SCA115945R1001	Side operated switch fuse	46
OS160GB02P	1SCA116725R1001	Front operated switch fuse	33
OS160GB03BBP	1SCA120657R1001	Special connected switch fuse	43
OS160GB03K	1SCA116753R1001	Front operated switch fuse	36
OS160GB03P	1SCA115413R1001	Front operated switch fuse	33
OS160GB04BBN1P	1SCA122598R1001	Special connected switch fuse	43
OS160GB04N1K	1SCA116754R1001	Front operated switch fuse	36
OS160GB04N1P	1SCA115896R1001	Front operated switch fuse	33
OS160GB11P	1SCA117430R1001	Front operated switch fuse	31
OS160GB12BBP	1SCA120726R1001	Special connected switch fuse	42
OS160GB12LRP	1SCA120271R1001	Special connected switch fuse	44
OS160GB12P	1SCA115637R1001	Front operated switch fuse	31
OS160GB21LRP	1SCA120273R1001	Special connected switch fuse	44
OS160GB22LRP	1SCA120277R1001	Special connected switch fuse	44
OS160GB22N1P	1SCA115899R1001	Front operated switch fuse	31
OS160GBS30	1SCA115960R1001	Side operated switch fuse	40
OS160GBS30K	1SCA115927R1001	Side operated switch fuse	38
OS160GBS40N1	1SCA115961R1001	Side operated switch fuse	40
OS160GBS40N1K	1SCA115928R1001	Side operated switch fuse	38
OS160GBS40N2	1SCA116762R1001	Side operated switch fuse	40
OS160GD02P	1SCA116717R1001	Front operated switch fuse	20
OS160GD03BBP	1SCA120655R1001	Special connected switch fuse	29
OS160GD03K	1SCA116742R1001	Front operated switch fuse	23
OS160GD03P	1SCA115399R1001	Front operated switch fuse	20
OS160GD04BBN2P	1SCA120661R1001	Special connected switch fuse	29
OS160GD04FK	1SCA116880R1001	Front operated switch fuse	23
OS160GD04FP	1SCA115402R1001	Front operated switch fuse	20
OS160GD04N2K	1SCA116743R1001	Front operated switch fuse	23
OS160GD04N2P	1SCA115882R1001	Front operated switch fuse	20
OS160GD11P	1SCA116713R1001	Front operated switch fuse	18
OS160GD12BBP	1SCA120752R1001	Special connected switch fuse	28
OS160GD12LRP	1SCA120267R1001	Special connected switch fuse	30
OS160GD12P	1SCA115643R1001	Front operated switch fuse	18
OS160GD21LRP	1SCA120294R1001	Special connected switch fuse	30
OS160GD22FP	1SCA116855R1001	Front operated switch fuse	18
OS160GD22LRP	1SCA120275R1001	Special connected switch fuse	30
OS160GD22N2P	1SCA115884R1001	Front operated switch fuse	18
OS160GDS30	1SCA115968R1001	Side operated switch fuse	27
OS160GDS30K	1SCA115935R1001	Side operated switch fuse	25
OS160GDS40F	1SCA116757R1001	Side operated switch fuse	27
OS160GDS40N2	1SCA115969R1001	Side operated switch fuse	27
OS160GDS40N2K	1SCA115939R1001	Side operated switch fuse	25
OS16FD1201	1SCA108788R1001	Front operated switch fuse	48
OS16FD2201F	1SCA108993R1001	Front operated switch fuse	48

Type	Order number	Description	Page
OS16FD2201N1	1SCA108789R1001	Front operated switch fuse	48
OS16FDS3001	1SCA108994R1001	Side operated switch fuse	48
OS16FDS4001F	1SCA108996R1001	Side operated switch fuse	48
OS16FDS4001N1	1SCA108995R1001	Side operated switch fuse	48
OS200B02P	1SCA022769R7820	Front operated switch fuse	34
OS200B03BBP	1SCA102082R1001	Special connected switch fuse	43
OS200B03K	1SCA022763R6950	Front operated switch fuse	37
OS200B03N3P	1SCA022750R0620	Front operated switch fuse	34
OS200B03P	1SCA022709R9330	Front operated switch fuse	34
OS200B04BBN2P	1SCA102123R1001	Special connected switch fuse	43
OS200B04N2K	1SCA022763R7090	Front operated switch fuse	37
OS200B04N2P	1SCA022709R9410	Front operated switch fuse	34
OS200B12BBP	1SCA102124R1001	Special connected switch fuse	42
OS200B12LRP	1SCA022854R2910	Special connected switch fuse	44
OS200B12P	1SCA022721R3210	Front operated switch fuse	32
OS200B21LRP	1SCA022854R3050	Special connected switch fuse	44
OS200B22BBN2P	1SCA102130R1001	Special connected switch fuse	42
OS200B22LRP	1SCA022854R4290	Special connected switch fuse	44
OS200B22N2P	1SCA022721R3300	Front operated switch fuse	32
OS200BS03	1SCA022860R3810	Side operated switch fuse	41
OS200BS03K	1SCA022860R3990	Side operated switch fuse	39
OS200BS04N2	1SCA022870R7510	Side operated switch fuse	41
OS200BS04N2K	1SCA022870R7690	Side operated switch fuse	39
OS200BS30	1SCA022870R7770	Side operated switch fuse	41
OS200BS30K	1SCA022870R7850	Side operated switch fuse	39
OS200BS40N2	1SCA022870R8150	Side operated switch fuse	41
OS200BS40N2K	1SCA022870R8230	Side operated switch fuse	39
OS200D02P	1SCA022759R9220	Front operated switch fuse	21
OS200D03BBP	1SCA102150R1001	Special connected switch fuse	29
OS200D03K	1SCA022764R7130	Front operated switch fuse	24
OS200D03N3P	1SCA022749R8710	Front operated switch fuse	21
OS200D03P	1SCA022709R9500	Front operated switch fuse	21
OS200D04BBN2P	1SCA102139R1001	Special connected switch fuse	29
OS200D04FP	1SCA022725R4750	Front operated switch fuse	21
OS200D04N2K	1SCA022768R7430	Front operated switch fuse	24
OS200D04N2P	1SCA022709R9680	Front operated switch fuse	21
OS200D11P	1SCA022759R9650	Front operated switch fuse	19
OS200D12BBP	1SCA102156R1001	Special connected switch fuse	28
OS200D12P	1SCA022721R3050	Front operated switch fuse	19
OS200D22BBN2P	1SCA102006R1001	Special connected switch fuse	28
OS200D22N2P	1SCA022721R3130	Front operated switch fuse	19
OS200DS03	1SCA022871R0720	Side operated switch fuse	27
OS200DS03K	1SCA022871R0810	Side operated switch fuse	26
OS200DS04F	1SCA022871R0990	Side operated switch fuse	27
OS200DS04FK	1SCA022871R1020	Side operated switch fuse	26
OS200DS30	1SCA022871R1370	Side operated switch fuse	27
OS200DS30K	1SCA022871R1450	Side operated switch fuse	26
OS200DS40F	1SCA022871R1530	Side operated switch fuse	27
OS200DS40FK	1SCA022871R1610	Side operated switch fuse	26
OS200DZ03P	1SCA022797R3440	Front operated switch fuse	21
OS200DZ04N2P	1SCA022820R9230	Front operated switch fuse	21
OS200DZ12P	1SCA022820R9150	Front operated switch fuse	19
OS200J02P	1SCA107598R1001	Front operated fusible disconnect switch	50
OS200J03P	1SCA022709R9760	Front operated fusible disconnect switch	50
OS200J04FP	1SCA022758R9770	Front operated fusible disconnect switch	50
OS20FB12A1	1SCA108790R1001	Front operated switch fuse	31
OS20FB22A1N1	1SCA108796R1001	Front operated switch fuse	31
OS20FBS30A1	1SCA108997R1001	Side operated switch fuse	38
OS20FBS40A1N1	1SCA108998R1001	Side operated switch fuse	38
OS250B02P	1SCA022769R9440	Front operated switch fuse	34
OS250B03BBP	1SCA102168R1001	Special connected switch fuse	43
OS250B03K	1SCA022763R6010	Front operated switch fuse	37
OS250B03N3P	1SCA022750R8010	Front operated switch fuse	34
OS250B03P	1SCA022750R6660	Front operated switch fuse	34
OS250B04BBN2P	1SCA102164R1001	Special connected switch fuse	43
OS250B04N2K	1SCA022763R6280	Front operated switch fuse	37
OS250B04N2P	1SCA022750R7800	Front operated switch fuse	34
OS250B12BBP	1SCA102178R1001	Special connected switch fuse	42
OS250B12LRP	1SCA022854R5690	Special connected switch fuse	44
OS250B12P	1SCA022778R9860	Front operated switch fuse	32
OS250B21LRP	1SCA022854R5850	Special connected switch fuse	44
OS250B22BBN2P	1SCA102188R1001	Special connected switch fuse	42
OS250B22LRP	1SCA022854R7210	Special connected switch fuse	44
OS250B22N2P	1SCA022778R9940	Front operated switch fuse	32
OS250BS03	1SCA022860R4370	Side operated switch fuse	41
OS250BS03K	1SCA022860R4450	Side operated switch fuse	39
OS250BS04N2	1SCA022870R8310	Side operated switch fuse	41
OS250BS04N2K	1SCA022870R8400	Side operated switch fuse	39
OS250BS30	1SCA022870R8580	Side operated switch fuse	41
OS250BS30K	1SCA022870R8660	Side operated switch fuse	39
OS250BS40N2	1SCA022870R8910	Side operated switch fuse	41
OS250BS40N2K	1SCA022870R9040	Side operated switch fuse	39
OS250D02P	1SCA022760R0170	Front operated switch fuse	21
OS250D03BBP	1SCA102190R1001	Special connected switch fuse	29
OS250D03K	1SCA022763R6360	Front operated switch fuse	24
OS250D03N3P	1SCA022749R9430	Front operated switch fuse	21
OS250D03P	1SCA022719R0090	Front operated switch fuse	21
OS250D04BBN2P	1SCA102205R1001	Special connected switch fuse	29
OS250D04FP	1SCA022726R8620	Front operated switch fuse	21
OS250D04N2K	1SCA022763R6440	Front operated switch fuse	24
OS250D04N2P	1SCA022719R2380	Front operated switch fuse	21
OS250D11P	1SCA022752R8710	Front operated switch fuse	19
OS250D12BBP	1SCA102207R1001	Special connected switch fuse	28
OS250D12LRP	1SCA022852R8410	Special connected switch fuse	30
OS250D12P	1SCA022726R8380	Front operated switch fuse	19
OS250D21LRP	1SCA022852R8500	Special connected switch fuse	30
OS250D22BBN2P	1SCA102212R1001	Special connected switch fuse	28
OS250D22LRP	1SCA022853R0310	Special connected switch fuse	30
OS250D22N2P	1SCA022726R8460	Front operated switch fuse	19
OS250DS03	1SCA022860R3050	Side operated switch fuse	27
OS250DS03K	1SCA022860R3130	Side operated switch fuse	26
OS250DS04F	1SCA022860R3210	Side operated switch fuse	27
OS250DS04FK	1SCA022860R3300	Side operated switch fuse	26
OS250DS30	1SCA022871R2180	Side operated switch fuse	27
OS250DS30K	1SCA022871R2260	Side operated switch fuse	26
OS250DS40F	1SCA022871R2340	Side operated switch fuse	27
OS250DS40FK	1SCA022871R2420	Side operated switch fuse	26
OS25FF1210	1SCA108636R1001	Front operated switch fuse	45
OS25FF2210F	1SCA108637R1001	Front operated switch fuse	45
OS25FF2210N1	1SCA108638R1001	Front operated switch fuse	45
OS25FFS3010	1SCA108639R1001	Side operated switch fuse	46
OS25FFS4010F	1SCA108640R1001	Side operated switch fuse	46
OS25FFS4010N1	1SCA108661R1001	Side operated switch fuse	46
OS30FACC12P	1SCA108817R1001	Front operated fusible disconnect switch	49
OS30FACC22FP	1SCA108821R1001	Front operated fusible disconnect switch	49
OS30FACCS30P	1SCA108999R1001	Side operated fusible disconnect switch	51
OS30FAJ12P	1SCA108828R1001	Front operated fusible disconnect switch	49
OS30FAJ22FP	1SCA108831R1001	Front operated fusible disconnect switch	49
OS30FAJS30P	1SCA108838R1001	Side operated fusible disconnect switch	51
OS315B02P	1SCA022817R3450	Front operated switch fuse	34
OS315B03BBP	1SCA102222R1001	Special connected switch fuse	43
OS315B03K	1SCA022763R6520	Front operated switch fuse	37
OS315B03N3P	1SCA022753R8940	Front operated switch fuse	34
OS315B03P	1SCA022719R0680	Front operated switch fuse	34
OS315B04BBN2P	1SCA102225R1001	Special connected switch fuse	43
OS315B04N2K	1SCA022763R6610	Front operated switch fuse	37
OS315B04N2P	1SCA022719R2710	Front operated switch fuse	34
OS315B12BBP	1SCA102234R1001	Special connected switch fuse	42
OS315B12LRP	1SCA022854R8790	Special connected switch fuse	44
OS315B12P	1SCA022753R2310	Front operated switch fuse	32
OS315B21LRP	1SCA022854R8870	Special connected switch fuse	44
OS315B22BBN2P	1SCA102247R1001	Special connected switch fuse	42
OS315B22LRP	1SCA022855R0000	Special connected switch fuse	44
OS315B22N2P	1SCA022753R3390	Front operated switch fuse	32
OS315BS03	1SCA022860R4700	Side operated switch fuse	41
OS315BS03K	1SCA022860R4880	Side operated switch fuse	39
OS315BS04N2	1SCA022870R9120	Side operated switch fuse	41
OS315BS04N2K	1SCA022870R9210	Side operated switch fuse	39
OS315BS30	1SCA022870R9390	Side operated switch fuse	41
OS315BS30K	1SCA022870R9470	Side operated switch fuse	39
OS315BS40N2	1SCA022870R9710	Side operated switch fuse	41
OS315BS40N2K	1SCA022870R9800	Side operated switch fuse	39
OS32FB12A1	1SCA108840R1001	Front operated switch fuse	31
OS32FB12A2	1SCA108847R1001	Front operated switch fuse	31

Type	Order number	Description	Page
OS32FB12F1	1SCA108851R1001	Front operated switch fuse	31
OS32FB22A1N1	1SCA108853R1001	Front operated switch fuse	31
OS32FB22A2N1	1SCA108863R1001	Front operated switch fuse	31
OS32FB22F1N1	1SCA109003R1001	Front operated switch fuse	31
OS32FBS30A1	1SCA108877R1001	Side operated switch fuse	38
OS32FBS30A2	1SCA108882R1001	Side operated switch fuse	38
OS32FBS30F1	1SCA109004R1001	Side operated switch fuse	38
OS32FBS40A1N1	1SCA109006R1001	Side operated switch fuse	38
OS32FBS40A2N1	1SCA109007R1001	Side operated switch fuse	38
OS32FBS40F1N1	1SCA109005R1001	Side operated switch fuse	38
OS32FF1214	1SCA108642R1001	Front operated switch fuse	45
OS32FF2214F	1SCA108643R1001	Front operated switch fuse	45
OS32FF2214N1	1SCA108645R1001	Front operated switch fuse	45
OS32FFS3014	1SCA108646R1001	Side operated switch fuse	46
OS32FFS4014F	1SCA108647R1001	Side operated switch fuse	46
OS32FFS4014N1	1SCA108649R1001	Side operated switch fuse	46
OS32GB02P	1SCA116721R1001	Front operated switch fuse	33
OS32GB03K	1SCA116744R1001	Front operated switch fuse	36
OS32GB03P	1SCA115259R1001	Front operated switch fuse	33
OS32GB04N1K	1SCA116856R1001	Front operated switch fuse	36
OS32GB04N1P	1SCA114610R1001	Front operated switch fuse	33
OS32GB11P	1SCA116718R1001	Front operated switch fuse	31
OS32GB12P	1SCA115331R1001	Front operated switch fuse	31
OS32GB22N1P	1SCA115345R1001	Front operated switch fuse	31
OS32GBS30	1SCA115955R1001	Side operated switch fuse	40
OS32GBS30K	1SCA115918R1001	Side operated switch fuse	38
OS32GBS40N1	1SCA115956R1001	Side operated switch fuse	40
OS32GBS40N1K	1SCA115923R1001	Side operated switch fuse	38
OS32GD02P	1SCA116714R1001	Front operated switch fuse	20
OS32GD03K	1SCA116733R1001	Front operated switch fuse	23
OS32GD03P	1SCA115189R1001	Front operated switch fuse	20
OS32GD04FK	1SCA116737R1001	Front operated switch fuse	23
OS32GD04FP	1SCA115196R1001	Front operated switch fuse	20
OS32GD04N2K	1SCA116734R1001	Front operated switch fuse	23
OS32GD04N2P	1SCA115193R1001	Front operated switch fuse	20
OS32GD11P	1SCA116703R1001	Front operated switch fuse	18
OS32GD12P	1SCA114581R1001	Front operated switch fuse	18
OS32GD22FP	1SCA115205R1001	Front operated switch fuse	18
OS32GD22N2P	1SCA115202R1001	Front operated switch fuse	18
OS32GDS30	1SCA115963R1001	Side operated switch fuse	27
OS32GDS30K	1SCA115929R1001	Side operated switch fuse	25
OS32GDS40F	1SCA116755R1001	Side operated switch fuse	27
OS32GDS40N1K	1SCA115930R1001	Side operated switch fuse	25
OS32GDS40N2	1SCA116046R1001	Side operated switch fuse	27
OS32GDS40N2K	1SCA116402R1001	Side operated switch fuse	25
OS35FD1202	1SCA108908R1001	Front operated switch fuse	48
OS35FD2202F	1SCA109008R1001	Front operated switch fuse	48
OS35FD2202N1	1SCA108911R1001	Front operated switch fuse	48
OS35FDS3002	1SCA109009R1001	Side operated switch fuse	48
OS35FDS4002F	1SCA109011R1001	Side operated switch fuse	48
OS35FDS4002N1	1SCA109010R1001	Side operated switch fuse	48
OS400B02P	1SCA022813R7220	Front operated switch fuse	34
OS400B03BBP	1SCA102252R1001	Special connected switch fuse	43
OS400B03K	1SCA022763R6790	Front operated switch fuse	37
OS400B03N3P	1SCA022753R9160	Front operated switch fuse	34
OS400B03P	1SCA022719R0840	Front operated switch fuse	34
OS400B04BBN2P	1SCA102248R1001	Special connected switch fuse	43
OS400B04N2K	1SCA022763R6870	Front operated switch fuse	37
OS400B04N2P	1SCA022719R2890	Front operated switch fuse	34
OS400B12BBP	1SCA102254R1001	Special connected switch fuse	42
OS400B12LRP	1SCA022855R1400	Special connected switch fuse	44
OS400B12P	1SCA022753R3470	Front operated switch fuse	32
OS400B21LRP	1SCA022855R1580	Special connected switch fuse	44
OS400B22BBN2P	1SCA102263R1001	Special connected switch fuse	42
OS400B22LRP	1SCA022855R2710	Special connected switch fuse	44
OS400B22N2P	1SCA022753R7200	Front operated switch fuse	32
OS400BS03	1SCA022860R5180	Side operated switch fuse	41
OS400BS03K	1SCA022860R5260	Side operated switch fuse	39
OS400BS04N2	1SCA022870R9980	Side operated switch fuse	41
OS400BS04N2K	1SCA022871R0050	Side operated switch fuse	39
OS400BS30	1SCA022871R0130	Side operated switch fuse	41
OS400BS30K	1SCA022871R0210	Side operated switch fuse	39
OS400BS40N2	1SCA022871R0560	Side operated switch fuse	41
OS400BS40N2K	1SCA022871R0640	Side operated switch fuse	39
OS400D02P	1SCA022811R2740	Front operated switch fuse	21
OS400D03BBP	1SCA102260R1001	Special connected switch fuse	29
OS400D03K	1SCA022779R5410	Front operated switch fuse	24
OS400D03N3P	1SCA022753R9320	Front operated switch fuse	21
OS400D03P	1SCA022719R0250	Front operated switch fuse	21
OS400D04BBN2P	1SCA102289R1001	Special connected switch fuse	29
OS400D04FP	1SCA022753R7110	Front operated switch fuse	21
OS400D04N2K	1SCA022763R7250	Front operated switch fuse	24
OS400D04N2P	1SCA022719R2460	Front operated switch fuse	21
OS400D11P	1SCA110207R1001	Front operated switch fuse	19
OS400D12BBP	1SCA102280R1001	Special connected switch fuse	28
OS400D12LRP	1SCA022853R2280	Special connected switch fuse	30
OS400D12P	1SCA022753R3800	Front operated switch fuse	19
OS400D21LRP	1SCA022853R2360	Special connected switch fuse	30
OS400D22BBN2P	1SCA102283R1001	Special connected switch fuse	28
OS400D22LRP	1SCA022853R4140	Special connected switch fuse	30
OS400D22N2P	1SCA022753R1770	Front operated switch fuse	19
OS400DS03	1SCA022860R3480	Side operated switch fuse	27
OS400DS03K	1SCA022860R3560	Side operated switch fuse	26
OS400DS04F	1SCA022860R3640	Side operated switch fuse	27
OS400DS04FK	1SCA022860R3720	Side operated switch fuse	26
OS400DS30	1SCA022871R2850	Side operated switch fuse	27
OS400DS30K	1SCA022871R2930	Side operated switch fuse	26
OS400DS40F	1SCA022871R3070	Side operated switch fuse	27
OS400DS40FK	1SCA022871R3150	Side operated switch fuse	26
OS400J02P	1SCA107596R1001	Front operated fusible disconnect switch	50
OS400J03P	1SCA022719R1140	Front operated fusible disconnect switch	50
OS400J04FP	1SCA022755R3740	Front operated fusible disconnect switch	50
OS40FD12000	1SCA108914R1001	Front operated switch fuse	18
OS40FD22000N1	1SCA108938R1001	Front operated switch fuse	18
OS40FDS30000	1SCA108942R1001	Side operated switch fuse	25
OS40FDS30000-N	1SCA109012R1001	Side operated switch fuse	25
OS40FDS40000N1	1SCA108954R1001	Side operated switch fuse	25
OS50GF02P	1SCA118345R1001	Front operated switch fuse	45
OS50GF03P	1SCA115492R1001	Front operated switch fuse	45
OS50GF04FP	1SCA115498R1001	Front operated switch fuse	45
OS50GF04N1P	1SCA115495R1001	Front operated switch fuse	45
OS50GF11P	1SCA116870R1001	Front operated switch fuse	45
OS50GF12P	1SCA115553R1001	Front operated switch fuse	45
OS50GF22FP	1SCA114623R1001	Front operated switch fuse	45
OS50GF22N1P	1SCA114622R1001	Front operated switch fuse	45
OS50GFS30	1SCA116050R1001	Side operated switch fuse	47
OS50GFS30K	1SCA116404R1001	Side operated switch fuse	46
OS50GFS40F	1SCA116014R1001	Side operated switch fuse	47
OS50GFS40FK	1SCA116425R1001	Side operated switch fuse	46
OS50GFS40N1	1SCA116058R1001	Side operated switch fuse	47
OS50GFS40N1K	1SCA116013R1001	Side operated switch fuse	46
OS600J02P	1SCA107595R1001	Front operated fusible disconnect switch	50
OS600J03P	1SCA022825R8870	Front operated fusible disconnect switch	50
OS600J04FP	1SCA022839R4030	Front operated fusible disconnect switch	50
OS60GJ03P	1SCA115443R1001	Front operated fusible disconnect switch	49
OS60GJ04FP	1SCA115446R1001	Front operated fusible disconnect switch	49
OS60GJ04N1P	1SCA116736R1001	Front operated fusible disconnect switch	49
OS60GJ12P	1SCA115449R1001	Front operated fusible disconnect switch	49
OS60GJ22FP	1SCA115469R1001	Front operated fusible disconnect switch	49
OS60GJ22N1P	1SCA116735R1001	Front operated fusible disconnect switch	49
OS60GJS30	1SCA116051R1001	Side operated fusible disconnect switch	52
OS60GJS30K	1SCA116426R1001	Side operated fusible disconnect switch	51
OS60GJS40F	1SCA115970R1001	Side operated fusible disconnect switch	52
OS60GJS40FK	1SCA115941R1001	Side operated fusible disconnect switch	51
OS60GJS40N1	1SCA116763R1001	Side operated fusible disconnect switch	52
OS630B02P	1SCA113529R1001	Front operated switch fuse	35
OS630B03K	1SCA108708R1001	Front operated switch fuse	37
OS630B03N3P	1SCA100860R1001	Front operated switch fuse	35
OS630B03P	1SCA022825R5850	Front operated switch fuse	35
OS630B04N2K	1SCA108710R1001	Front operated switch fuse	37
OS630B04N2P	1SCA022825R6230	Front operated switch fuse	35
OS630B12P	1SCA022825R6400	Front operated switch fuse	32
OS630B22N2P	1SCA022825R6660	Front operated switch fuse	32
OS630BS03	1SCA108141R1001	Side operated switch fuse	41

Type	Order number	Description	Page
OS630BS03K	1SCA108142R1001	Side operated switch fuse	39
OS630BS04N2	1SCA108145R1001	Side operated switch fuse	41
OS630BS04N2K	1SCA108146R1001	Side operated switch fuse	39
OS630BS30	1SCA108147R1001	Side operated switch fuse	41
OS630BS30K	1SCA108148R1001	Side operated switch fuse	39
OS630BS40N2	1SCA108152R1001	Side operated switch fuse	41
OS630BS40N2K	1SCA108151R1001	Side operated switch fuse	39
OS630D02P	1SCA107745R1001	Front operated switch fuse	22
OS630D03K	1SCA108704R1001	Front operated switch fuse	24
OS630D03N3P	1SCA100858R1001	Front operated switch fuse	22
OS630D03P	1SCA022825R2830	Front operated switch fuse	22
OS630D04FP	1SCA022825R4610	Front operated switch fuse	22
OS630D04N2K	1SCA108705R1001	Front operated switch fuse	24
OS630D04N2P	1SCA022825R4290	Front operated switch fuse	22
OS630D11P	1SCA116381R1001	Front operated switch fuse	19
OS630D12P	1SCA022825R3810	Front operated switch fuse	19
OS630D22N2P	1SCA022825R4450	Front operated switch fuse	19
OS630DS03	1SCA108128R1001	Side operated switch fuse	27
OS630DS03K	1SCA108129R1001	Side operated switch fuse	26
OS630DS04F	1SCA108131R1001	Side operated switch fuse	27
OS630DS04FK	1SCA108132R1001	Side operated switch fuse	26
OS630DS30	1SCA108135R1001	Side operated switch fuse	27
OS630DS30K	1SCA108136R1001	Side operated switch fuse	26
OS630DS40F	1SCA108137R1001	Side operated switch fuse	27
OS630DS40FK	1SCA108138R1001	Side operated switch fuse	26
OS63GB02P	1SCA116854R1001	Front operated switch fuse	33
OS63GB03K	1SCA116745R1001	Front operated switch fuse	36
OS63GB03P	1SCA115235R1001	Front operated switch fuse	33
OS63GB04N1K	1SCA116746R1001	Front operated switch fuse	36
OS63GB04N1P	1SCA115238R1001	Front operated switch fuse	33
OS63GB11P	1SCA116872R1001	Front operated switch fuse	31
OS63GB12P	1SCA115325R1001	Front operated switch fuse	31
OS63GB22N1P	1SCA114601R1001	Front operated switch fuse	31
OS63GBS30	1SCA115957R1001	Side operated switch fuse	40
OS63GBS30K	1SCA115924R1001	Side operated switch fuse	38
OS63GBS40N1	1SCA115978R1001	Side operated switch fuse	40
OS63GBS40N1K	1SCA115979R1001	Side operated switch fuse	38
OS63GD02P	1SCA116715R1001	Front operated switch fuse	20
OS63GD03K	1SCA116738R1001	Front operated switch fuse	23
OS63GD03P	1SCA115207R1001	Front operated switch fuse	20
OS63GD04FK	1SCA116739R1001	Front operated switch fuse	23
OS63GD04FP	1SCA115228R1001	Front operated switch fuse	20
OS63GD04N2K	1SCA116876R1001	Front operated switch fuse	23
OS63GD04N2P	1SCA115209R1001	Front operated switch fuse	20
OS63GD11P	1SCA116711R1001	Front operated switch fuse	18
OS63GD12P	1SCA115227R1001	Front operated switch fuse	18
OS63GD22FP	1SCA115232R1001	Front operated switch fuse	18
OS63GD22N2P	1SCA115230R1001	Front operated switch fuse	18
OS63GDS30	1SCA116007R1001	Side operated switch fuse	27
OS63GDS30K	1SCA115931R1001	Side operated switch fuse	25
OS63GDS40F	1SCA116877R1001	Side operated switch fuse	27
OS63GDS40N1K	1SCA115932R1001	Side operated switch fuse	25
OS63GDS40N2	1SCA116047R1001	Side operated switch fuse	27
OS63GDS40N2K	1SCA116403R1001	Side operated switch fuse	25
OS800B02P	1SCA022837R6480	Front operated switch fuse	35
OS800B03K	1SCA108713R1001	Front operated switch fuse	37
OS800B03N3P	1SCA100861R1001	Front operated switch fuse	35
OS800B03P	1SCA022825R7550	Front operated switch fuse	35
OS800B04N2K	1SCA108714R1001	Front operated switch fuse	37
OS800B04N2P	1SCA022825R8010	Front operated switch fuse	35
OS800B12P	1SCA022825R8280	Front operated switch fuse	32
OS800B22N2P	1SCA022825R8440	Front operated switch fuse	32
OS800BS03	1SCA108076R1001	Side operated switch fuse	41
OS800BS03K	1SCA108077R1001	Side operated switch fuse	39
OS800BS04N2	1SCA108081R1001	Side operated switch fuse	41
OS800BS04N2K	1SCA108082R1001	Side operated switch fuse	39
OS800BS30	1SCA108083R1001	Side operated switch fuse	41
OS800BS30K	1SCA108084R1001	Side operated switch fuse	39
OS800BS40N2	1SCA108086R1001	Side operated switch fuse	41
OS800BS40N2K	1SCA108087R1001	Side operated switch fuse	39
OS800D02P	1SCA022837R2650	Front operated switch fuse	22
OS800D03K	1SCA108725R1001	Front operated switch fuse	24

Type	Order number	Description	Page
OS800D03N3P	1SCA100859R1001	Front operated switch fuse	22
OS800D03P	1SCA022825R4880	Front operated switch fuse	22
OS800D04FP	1SCA022825R5000	Front operated switch fuse	22
OS800D04N2K	1SCA108722R1001	Front operated switch fuse	24
OS800D04N2P	1SCA022825R5180	Front operated switch fuse	22
OS800D11P	1SCA116655R1001	Front operated switch fuse	19
OS800D12P	1SCA022825R5340	Front operated switch fuse	19
OS800D22N2P	1SCA022825R5510	Front operated switch fuse	19
OS800DS03	1SCA108092R1001	Side operated switch fuse	27
OS800DS03K	1SCA108093R1001	Side operated switch fuse	26
OS800DS04F	1SCA108094R1001	Side operated switch fuse	27
OS800DS04FK	1SCA108095R1001	Side operated switch fuse	26
OS800DS30	1SCA108098R1001	Side operated switch fuse	27
OS800DS30K	1SCA108099R1001	Side operated switch fuse	26
OS800DS40F	1SCA108100R1001	Side operated switch fuse	27
OS800DS40FK	1SCA108101R1001	Side operated switch fuse	26
OS800L02P	1SCA116921R1001	Front operated fusible disconnect switch	50
OS800L03P	1SCA022825R9920	Front operated fusible disconnect switch	50
OS800L04FP	1SCA022839R5430	Front operated fusible disconnect switch	50
OSD25P3	1SCA022192R9060	Blown fuse indicator	79
OSD25P4	1SCA022196R9520	Blown fuse indicator	79
OSGD125P3	1SCA115690R1001	Blown fuse indicator	79
OSGD125P4	1SCA115692R1001	Blown fuse indicator	79
OSGD50P3	1SCA116401R1001	Blown fuse indicator	79
OSGD50P4	1SCA115689R1001	Blown fuse indicator	79
OSGZD1	1SCA115688R1001	DIN-rail mounting kit	81
OSM100GB3M230C	1SCA116679R1001	Motorized switch fuse	54
OSM100GB4N1M230C	1SCA118779R1001	Motorized switch fuse	54
OSM1250B3M230C	1SCA112552R1001	Motorized switch fuse	54
OSM1250B3N3M230C	1SCA112550R1001	Motorized switch fuse	54
OSM1250B4N1M230C	1SCA118795R1001	Motorized switch fuse	54
OSM1250D3M230C	1SCA112549R1001	Motorized switch fuse	53
OSM1250D3N3M230C	1SCA112547R1001	Motorized switch fuse	53
OSM1250D4N2M230C	1SCA118850R1001	Motorized switch fuse	53
OSM1250DA3M230C	1SCA112546R1001	Motorized switch fuse	53
OSM1250DA3N3M230C	1SCA112544R1001	Motorized switch fuse	53
OSM1250DA4N2M230C	1SCA118851R1001	Motorized switch fuse	53
OSM125GB3M230C	1SCA116677R1001	Motorized switch fuse	54
OSM125GB4N1M230C	1SCA118780R1001	Motorized switch fuse	54
OSM125GD3M230C	1SCA116674R1001	Motorized switch fuse	53
OSM125GD4N2M230C	1SCA118828R1001	Motorized switch fuse	53
OSM125GF3M230C	1SCA116681R1001	Motorized switch fuse	55
OSM125GF4N1M230C	1SCA118798R1001	Motorized switch fuse	55
OSM160GB3M230C	1SCA116670R1001	Motorized switch fuse	54
OSM160GB4N1M230C	1SCA118781R1001	Motorized switch fuse	54
OSM160GD3M230C	1SCA116673R1001	Motorized switch fuse	53
OSM160GD4N2M230C	1SCA118831R1001	Motorized switch fuse	53
OSM200B3M230C	1SCA104272R1001	Motorized switch fuse	54
OSM200B3N3M230C	1SCA104323R1001	Motorized switch fuse	54
OSM200B4N1M230C	1SCA118784R1001	Motorized switch fuse	54
OSM200D3M230C	1SCA104284R1001	Motorized switch fuse	53
OSM200D3N3M230C	1SCA104282R1001	Motorized switch fuse	53
OSM200D4N2M230C	1SCA118836R1001	Motorized switch fuse	53
OSM250B3M230C	1SCA104287R1001	Motorized switch fuse	54
OSM250B3N3M230C	1SCA104290R1001	Motorized switch fuse	54
OSM250B4N1M230C	1SCA118785R1001	Motorized switch fuse	54
OSM250D3M230C	1SCA104295R1001	Motorized switch fuse	53
OSM250D3N3M230C	1SCA104297R1001	Motorized switch fuse	53
OSM250D4N2M230C	1SCA118838R1001	Motorized switch fuse	53
OSM315B3M230C	1SCA104303R1001	Motorized switch fuse	54
OSM315B3N3M230C	1SCA104306R1001	Motorized switch fuse	54
OSM315B4N1M230C	1SCA118788R1001	Motorized switch fuse	54
OSM32GB3M230C	1SCA116662R1001	Motorized switch fuse	54
OSM32GB4N1M230C	1SCA118775R1001	Motorized switch fuse	54
OSM32GD3M230C	1SCA116664R1001	Motorized switch fuse	53
OSM32GD4N2M230C	1SCA118822R1001	Motorized switch fuse	53
OSM400B3M230C	1SCA104310R1001	Motorized switch fuse	54
OSM400B3N3M230C	1SCA104312R1001	Motorized switch fuse	54
OSM400B4N1M230C	1SCA118789R1001	Motorized switch fuse	54
OSM400D3M230C	1SCA104315R1001	Motorized switch fuse	53
OSM400D3N3M230C	1SCA104317R1001	Motorized switch fuse	53
OSM400D4N2M230C	1SCA118842R1001	Motorized switch fuse	53

Type	Order number	Description	Page
OSM50GF3M230C	1SCA116666R1001	Motorized switch fuse	55
OSM50GF4N1M230C	1SCA118871R1001	Motorized switch fuse	55
OSM630B3M230C	1SCA104516R1001	Motorized switch fuse	54
OSM630B3N3M230C	1SCA104535R1001	Motorized switch fuse	54
OSM630B4N1M230C	1SCA118791R1001	Motorized switch fuse	54
OSM630D3M230C	1SCA104518R1001	Motorized switch fuse	53
OSM630D3N3M230C	1SCA104533R1001	Motorized switch fuse	53
OSM630D4N2M230C	1SCA118846R1001	Motorized switch fuse	53
OSM63GB3M230C	1SCA116657R1001	Motorized switch fuse	54
OSM63GB4N1M230C	1SCA118776R1001	Motorized switch fuse	54
OSM63GD3M230C	1SCA116660R1001	Motorized switch fuse	53
OSM63GD4N2M230C	1SCA118865R1001	Motorized switch fuse	53
OSM800B3M230C	1SCA104520R1001	Motorized switch fuse	54
OSM800B3N3M230C	1SCA104536R1001	Motorized switch fuse	54
OSM800B4N1M230C	1SCA118792R1001	Motorized switch fuse	54
OSM800D3M230C	1SCA104522R1001	Motorized switch fuse	53
OSM800D3N3M230C	1SCA104534R1001	Motorized switch fuse	53
OSM800D4N2M230C	1SCA118847R1001	Motorized switch fuse	53
OSP1250B	1SCA107950R1001	Fourth pole	68
OSP1250D	1SCA107946R1001	Fourth pole	68
OSP1250DA	1SCA112402R1001	Fourth pole	68
OSP1250N	1SCA107943R1001	Fourth pole	68
OSP160GB	1SCA114769R1001	Fourth pole	68
OSP160GD	1SCA114768R1001	Fourth pole	68
OSP160GN	1SCA114770R1001	Fourth pole	68
OSP200B	1SCA022735R9180	Fourth pole	68
OSP200D	1SCA022735R8960	Fourth pole	68
OSP200N	1SCA022735R8700	Fourth pole	68
OSP250B	1SCA022770R4030	Fourth pole	68
OSP250D	1SCA022735R9340	Fourth pole	68
OSP250N	1SCA022735R9260	Fourth pole	68
OSP400B	1SCA022770R3140	Fourth pole	68
OSP400D	1SCA022770R3220	Fourth pole	68
OSP400N	1SCA022770R3490	Fourth pole	68
OSP800B	1SCA100434R1001	Fourth pole	68
OSP800D	1SCA100433R1001	Fourth pole	68
OSP800N	1SCA100432R1001	Fourth pole	68
OSS1250G1L/3	1SCA107938R1001	Terminal shroud	71
OSS1250G1L/4	1SCA107940R1001	Terminal shroud	71
OSS1250G1S/3	1SCA107939R1001	Terminal shroud	71
OSS1250G1S/4	1SCA107941R1001	Terminal shroud	71
OSS160GG1L/3	1SCA114764R1001	Terminal shroud	71
OSS160GG1L/4	1SCA114765R1001	Terminal shroud	71
OSS160GG1S/3	1SCA114766R1001	Terminal shroud	71
OSS160GG1S/4	1SCA114767R1001	Terminal shroud	71
OSS160GG3LS	1SCA121570R1001	Terminal shroud	72
OSS160GG4LS	1SCA121571R1001	Terminal shroud	72
OSS200G1L/3	1SCA022731R8910	Terminal shroud	71
OSS200G1L/4	1SCA022731R9040	Terminal shroud	71
OSS200G1S/3	1SCA022732R0130	Terminal shroud	71
OSS200G1S/4	1SCA022732R0050	Terminal shroud	71
OSS250G1L	1SCA022727R5080	Terminal shroud	71
OSS250G1L/3	1SCA022731R9390	Terminal shroud	71
OSS250G1L/4	1SCA022731R9470	Terminal shroud	71
OSS250G1S	1SCA022727R4940	Terminal shroud	71
OSS250G1S/3	1SCA022731R9550	Terminal shroud	71
OSS250G1S/4	1SCA022731R9630	Terminal shroud	71
OSS250G1SH/1	1SCA103500R1001	Terminal shroud	71
OSS400G1L/3	1SCA022776R6650	Terminal shroud	71
OSS400G1L/4	1SCA022776R6730	Terminal shroud	71
OSS400G1S/3	1SCA022776R6900	Terminal shroud	71
OSS400G1S/4	1SCA022776R7030	Terminal shroud	71
OSS400G1SH/1	1SCA103503R1001	Terminal shroud	71
OSS400G3LS	1SCA100396R1001	Terminal shroud	72
OSS400G3SS	1SCA100390R1001	Terminal shroud	72
OSS400G4LSL	1SCA100398R1001	Terminal shroud	72
OSS400G4LSR	1SCA100400R1001	Terminal shroud	72
OSS400G4SSL	1SCA100392R1001	Terminal shroud	72
OSS400G4SSR	1SCA100394R1001	Terminal shroud	72
OSS800G1L/3	1SCA022776R7200	Terminal shroud	71
OSS800G1L/4	1SCA022776R7380	Terminal shroud	71
OSS800G1S/3	1SCA022776R7540	Terminal shroud	71

Type	Order number	Description	Page
OSS800G1S/4	1SCA022776R7460	Terminal shroud	71
OSV1250DK	1SCA107797R1001	Handle	61
OSV200BK	1SCA022779R7530	Handle	61
OSV250DK	1SCA022763R3510	Handle	61
OSV400BK	1SCA022763R3930	Handle	61
OSV400DK	1SCA022763R4230	Handle	61
OSV800DK	1SCA107794R1001	Handle	61
OSVY1250DK	1SCA108702R1001	Handle	61
OSVY200BK	1SCA022779R7700	Handle	61
OSVY250DK	1SCA022778R6500	Handle	61
OSVY400BK	1SCA022779R5830	Handle	61
OSVY400DK	1SCA022779R5590	Handle	61
OSVY800DK	1SCA108703R1001	Handle	61
OSZ1	1SCA022481R3710	Neutral link	69
OSZ2	1SCA022481R3800	Neutral link	69
OSZ4	1SCA022530R0200	Mounting frame for auxiliary contacts	65
OSZ4	1SCA022530R0200	Mounting frame	78
OSZT1A	1SCA106532R1001	Mechanism interlock kits & Electrical interlocks	80
OSZT1L	1SCA106538R1001	Mechanism interlock kits & Electrical interlocks	80
OSZT2A	1SCA106534R1001	Mechanism interlock kits & Electrical interlocks	80
OSZT2L	1SCA106539R1001	Mechanism interlock kits & Electrical interlocks	80
OSZT3A	1SCA106535R1001	Mechanism interlock kits & Electrical interlocks	80
OSZT3L	1SCA106540R1001	Mechanism interlock kits & Electrical interlocks	80
OSZT4A	1SCA106536R1001	Mechanism interlock kits & Electrical interlocks	80
OSZT4L	1SCA106541R1001	Mechanism interlock kits & Electrical interlocks	80
OSZX3	1SCA101224R1001	Blown fuse indicator	79
OSZX4	1SCA101225R1001	Blown fuse indicator	79
OTS1600G1L	1SCA106134R1001	Terminal shroud	71
OTS1600G1S	1SCA102667R1001	Terminal shroud	71
OTS250G1L	1SCA022715R5340	Terminal shroud	71
OTS250G1S	1SCA022715R5260	Terminal shroud	71
OTS800G1L	1SCA022776R7710	Terminal shroud	71
OTS800G1S	1SCA022776R8010	Terminal shroud	71
OTVS1	1SCA111413R1001	Handle and spare fuse storage clip	70
OTVS2	1SCA111414R1001	Handle and spare fuse storage clip	70
OTZT1A	1SCA106522R1001	Mechanism interlock kits & Electrical interlocks	80
OTZT1L	1SCA106527R1001	Mechanism interlock kits & Electrical interlocks	80
OTZW10	1SCA022431R5280	Conversion kit for combination switches	76
OTZW25	1SCA022778R6920	Conversion kit for combination switches	76
OTZW26	1SCA022778R7060	Conversion kit for combination switches	76
OWC6DSH1	1SCA105251R1001	Conversion kit for combination switches	76
OWC6DSH2	1SCA105252R1001	Conversion kit for combination switches	76
OWM6DS1	1SCA105253R1001	Conversion kit for combination switches	76
OWM6DS2	1SCA105254R1001	Conversion kit for combination switches	76
OWP6DS1	1SCA105255R1001	Conversion kit for combination switches	76
OWP6DS2	1SCA105256R1001	Conversion kit for combination switches	76
OXN1250S	1SCA104163R1001	Neutral link	69
OXN250	1SCA022752R9950	Neutral link	69
OXN250	1SCA022752R9950	Neutral link	69
OXN400	1SCA022770R3060	Neutral link	69
OXN800S	1SCA022831R4880	Neutral link	69
OXP12X250	1SCA022325R6980	Shaft	63
OXP12X280	1SCA022137R5140	Shaft	63
OXP12X280	1SCA022137R5140	Shaft	64
OXP12X280-45	1SCA022382R0800	Shaft	64
OXP12X325	1SCA022042R5810	Shaft	63
OXP12X325	1SCA022042R5810	Shaft	64
OXP12X325-45	1SCA022304R4450	Shaft	64
OXP12X395	1SCA022042R5990	Shaft	63
OXP12X395	1SCA022042R5990	Shaft	64
OXP12X465	1SCA022042R6020	Shaft	63
OXP12X465	1SCA022042R6020	Shaft	64

Type	Order number	Description	Page
OXP12X535	1SCA022042R6110	Shaft	63
OXP12X535	1SCA022042R6110	Shaft	64
OXP6X130	1SCA022057R0570	Shaft	62
OXP6X130	1SCA022057R0570	Shaft	63
OXP6X150	1SCA022295R5600	Shaft	62
OXP6X150-45	1SCA022294R4400	Shaft	62
OXP6X161	1SCA022067R1760	Shaft	62
OXP6X161	1SCA022067R1760	Shaft	63
OXP6X170	1SCA108224R1001	Shaft	62
OXP6X170-45	1SCA108227R1001	Shaft	62
OXP6X210	1SCA022295R6080	Shaft	62
OXP6X210	1SCA022295R6080	Shaft	63
OXP6X210-45	1SCA022294R4230	Shaft	62
OXP6X210-45	1SCA022294R4230	Shaft	63
OXP6X265	1SCA108225R1001	Shaft	62
OXP6X265-45	1SCA108228R1001	Shaft	62
OXP6X290	1SCA022042R6370	Shaft	62
OXP6X290	1SCA022042R6370	Shaft	63
OXP6X290-45	1SCA022304R4290	Shaft	62
OXP6X290-45	1SCA022304R4290	Shaft	63
OXP6X360	1SCA022042R6530	Shaft	62
OXP6X360	1SCA022042R6530	Shaft	63
OXP6X360-45	1SCA022341R4640	Shaft	62
OXP6X360-45	1SCA022341R4640	Shaft	63
OXP6X400	1SCA108226R1001	Shaft	62
OXP6X400-45	1SCA108229R1001	Shaft	62
OXP6X430	1SCA022056R6030	Shaft	62
OXP6X430	1SCA022056R6030	Shaft	63
OXP6X63	1SCA111010R1001	Shaft	62
OXP6X63	1SCA111010R1001	Shaft	63
OXP6X90	1SCA022064R1180	Shaft	62
OXP6X90	1SCA022064R1180	Shaft	63
OZXB17	1SCA022859R3230	Terminal clamp	73
OZXB17/1	1SCA022859R3150	Terminal clamp	73
OZXB1L	1SCA022169R2030	Terminal clamp	73
OZXB1L/1	1SCA022194R0030	Terminal clamp	73
OZXB2K	1SCA022264R0010	Single pole terminal shroud for terminal clamp	72
OZXB2K/1	1SCA022644R6700	Single pole terminal shroud for terminal clamp	72
OZXB2L	1SCA022158R7750	Terminal clamp	73
OZXB2L	1SCA022158R7750	Terminal clamp	74
OZXB2L/1	1SCA022194R0460	Terminal clamp	73
OZXB2L/1	1SCA022194R0460	Terminal clamp	74
OZXB3	1SCA022136R8100	Terminal clamp	73
OZXB3	1SCA022136R8100	Terminal clamp	74
OZXB3	1SCA022136R8100	Terminal clamp	75
OZXB3/1	1SCA022194R0620	Terminal clamp	73
OZXB3/1	1SCA022194R0620	Terminal clamp	74
OZXB3/1	1SCA022194R0620	Terminal clamp	75
OZXB3K	1SCA022264R0440	Single pole terminal shroud for terminal clamp	72
OZXB3K/1	1SCA022644R6880	Single pole terminal shroud for terminal clamp	72
OZXB4	1SCA022137R4760	Terminal clamp	73
OZXB4	1SCA022137R4760	Terminal clamp	74
OZXB4	1SCA022137R4760	Terminal clamp	75
OZXB4/1	1SCA022194R0890	Terminal clamp	73
OZXB4/1	1SCA022194R0890	Terminal clamp	74
OZXB4/1	1SCA022194R0890	Terminal clamp	75
OZXB4K	1SCA022199R2850	Single pole terminal shroud for terminal clamp	72
OZXB4K/1	1SCA022644R6960	Single pole terminal shroud for terminal clamp	72
OZXB5	1SCA022137R2470	Terminal clamp	73
OZXB5	1SCA022137R2470	Terminal clamp	74
OZXB5	1SCA022137R2470	Terminal clamp	75
OZXB5/1	1SCA022194R1010	Terminal clamp	73
OZXB5/1	1SCA022194R1010	Terminal clamp	74
OZXB5/1	1SCA022194R1010	Terminal clamp	75
OZXB5K	1SCA022283R8040	Single pole terminal shroud for terminal clamp	72

Type	Order number	Description	Page
OZXB5K/1	1SCA022644R7000	Single pole terminal shroud for terminal clamp	72
OZXB6	1SCA022137R4920	Terminal clamp	74
OZXB6	1SCA022137R4920	Terminal clamp	75
OZXB6/1	1SCA022194R1270	Terminal clamp	74
OZXB6/1	1SCA022194R1270	Terminal clamp	75
OZXB7	1SCA022185R0040	Terminal clamp	74
OZXB7/1	1SCA022194R1430	Terminal clamp	74
OZXB7L	1SCA022185R7130	Terminal clamp	73
OZXB7L	1SCA022185R7130	Terminal clamp	75
OZXB7L/1	1SCA022194R1600	Terminal clamp	73
OZXB7L/1	1SCA022194R1600	Terminal clamp	75
OZXB8	1SCA022744R1510	Terminal clamp	73
OZXB8	1SCA022744R1510	Terminal clamp	74
OZXB8	1SCA022744R1510	Terminal clamp	75
OZXB8/1	1SCA022744R1600	Terminal clamp	73
OZXB8/1	1SCA022744R1600	Terminal clamp	74
OZXB8/1	1SCA022744R1600	Terminal clamp	75
OZXB9	1SCA022750R3210	Terminal clamp	73
OZXB9	1SCA022750R3210	Terminal clamp	74
OZXB9	1SCA022750R3210	Terminal clamp	75
OZXB9/1	1SCA022750R3300	Terminal clamp	73
OZXB9/1	1SCA022750R3300	Terminal clamp	74
OZXB9/1	1SCA022750R3300	Terminal clamp	75
OZXP120	1SCA115540R1001	Terminal clamp	75
OZXP150	1SCA115541R1001	Terminal clamp	75
OZXP240	1SCA115542R1001	Terminal clamp	75
OZXP240	1SCA115542R1001	Terminal clamp	75
OZXP240	1SCA115542R1001	Terminal clamp	75
OZXP2X240	1SCA115544R1001	Terminal clamp	75
OZXP2X240	1SCA115544R1001	Terminal clamp	75
OZXP300	1SCA115543R1001	Terminal clamp	75
OZXP95	1SCA115539R1001	Terminal clamp	75
OZXP95	1SCA115539R1001	Terminal clamp	75
OZXR185	1SCA115531R1001	Terminal clamp	75
OZXR185	1SCA115531R1001	Terminal clamp	75
OZXR240	1SCA115532R1001	Terminal clamp	75
OZXR2X185	1SCA115534R1001	Terminal clamp	75
OZXR2X185	1SCA115534R1001	Terminal clamp	75
OZXR2X185	1SCA115534R1001	Terminal clamp	75
OZXR2X300	1SCA115535R1001	Terminal clamp	75
OZXR300	1SCA115533R1001	Terminal clamp	75
OZXR70	1SCA115529R1001	Terminal clamp	75
OZXR95	1SCA115530R1001	Terminal clamp	75
OZXR95	1SCA115530R1001	Terminal clamp	75
OZXT1	1SCA022469R6310	Terminal clamp	73
OZXT1/1	1SCA022469R6490	Terminal clamp	73
PB100 low	1SDA054970R1	Phase barrier	70
PB100 low	1SDA054971R1	Phase barrier	70
PB200 high	1SDA054972R1	Phase barrier	70
PB200 high	1SDA054973R1	Phase barrier	70
PDAL2/110AC50Hz	1SCA106543R1001	Coil	81
PDAL2/110AC60Hz	1SCA107100R1001	Coil	81
PDAL2/110DC	1SCA107105R1001	Coil	81
PDAL2/120AC60Hz	1SCA111353R1001	Coil	81
PDAL2/125DC	1SCA111338R1001	Coil	81
PDAL2/208AC60Hz	1SCA107101R1001	Coil	81
PDAL2/220DC	1SCA112503R1001	Coil	81
PDAL2/230AC50Hz	1SCA107102R1001	Coil	81
PDAL2/240AC60Hz	1SCA111356R1001	Coil	81
PDAL2/24AC60Hz	1SCA111350R1001	Coil	81
PDAL2/24DC	1SCA106542R1001	Coil	81
PDAL2/48DC	1SCA107103R1001	Coil	81
PDAL2/60DC	1SCA107104R1001	Coil	81
YASDA 7	1SCA022071R3010	Handle	59
YASDA 8	1SCA022071R3270	Handle	59
YASDA35	1SCA104400R1001	Handle	59

Contact us

ABB Oy
Low Voltage Switches
P.O. Box 622
FI-65101 Vaasa, Finland
Phone: +358 10 22 11
Fax: +358 10 22 45708
E-Mail: firstname.surname@fi.abb.com

www.abb.com

The technical data and dimensions are valid at the time of printing. We reserve the right to subsequent alterations.

Catalogue OS1GB 11-09, 1SCC311013C0201

Producted by A&V Insinöörit Oy / Tekninen viestintä, Vaasa, Finland

Power and productivity
for a better world™