Accessories
Bellows Coupling
For Solid Shaft Encoders
RCS-19-10-08

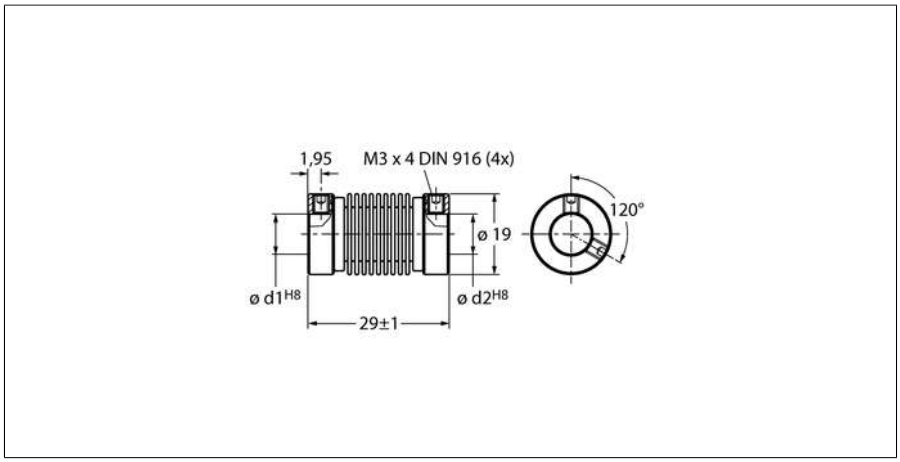

- Bellows coupling Ø 19 mm
- Bore diameter d1 = 10 mm, d2 = 8 mm

Type	RCS-19-10-08
ID	1545357

Edition • 2023-07-20T02:39:54+02:00