MOFLASH SIGNALLING

# AE30M



## Overview

ACOUSTIC SIGNALS - INDUSTRIAL - PIEZO BUZZER

The AE30M Flat top & Trumpet top miniature buzzers are suitable for automotive, security and light industrial applications where local indication is required. These buzzers produce a single-stage alarm with a rich, high-quality low-frequency signal, distinguishing them from traditional piezo alarms. Although they operate at a slightly lower dB level, the enhanced low-frequency output guarantees clear and easily perceptible alerts in diverse environments.

Designed for versatility, the AE30M buzzers feature a compact design that allows for seamless installation in a wide range of locations. The single-point fixing mechanism streamlines the mounting process, allowing for easy installation of the buzzers in tight spaces while maintaining optimal performance.

The units are color-coded for easy identification: Black for 12vDC & Red for 24vDC.

## Features

- Continuously rated
- Economical
- Suitable for panel or surface mounting
- Produces a high quality sound
- Compact design
- Termination is made by male & female spade terminals
- Available in 12vDC or 24vDC

## Material

- Black or Red ABS Plastic

IP34

Up to 80dB (A) @ 1m

Continuous

450 Hz*

-20 to +60°C

* ± 20 Hz

ISSUE 1

**APPROVALS & CONFORMITIES**

uksales@moflash.co.uk
moflashkm@moflash.com
exportsales@moflash.co.uk

11 Upper Conybere Street
Highgate, Birmingham
B12 0EB, England

UK +44(0)121 446 5322
FR +33(0)1 70 72 12 71

www.moflash.com

## Ordering Information

| Voltage | | Ordering Information | Mode, Current Consumption & dB | |
|---|---|---|---|---|
| Nominal Voltage | Voltage Range | Product Code | Continuous | dB* |
| 12vDC | 6-14vDC | AE30M-FT-01 (Flat Top - Black) | 30mA @12vDC | 80 |
| 24vDC | 10-28vDC | AE30M-FT-02 (Flat Top - Red) | 25mA @24vDC | 78 |
| | | | | |
| 12vDC | 6-14vDC | AE30M-TT-01 (Trumpet Top - Black) | 30mA @12vDC | 74 |
| 24vDC | 10-28vDC | AE30M-TT-02 (Trumpet Top - Red) | 25mA @24vDC | 72 |

* ± 3dB

## Weights & Dimensional Drawings

| Kg | 12v (FT) | 24v (FT) | 12v (TT) | 24v (TT) |
|---|---|---|---|---|
| Net Weight | 0.026 | 0.026 | 0.028 | 0.028 |
| Gross Weight | 0.032 | 0.032 | 0.035 | 0.035 |

Flat Top

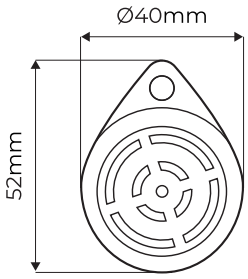


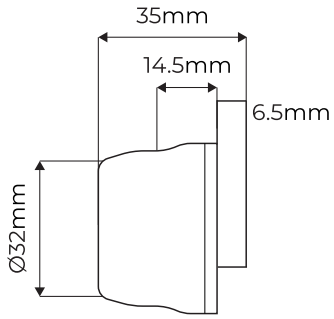


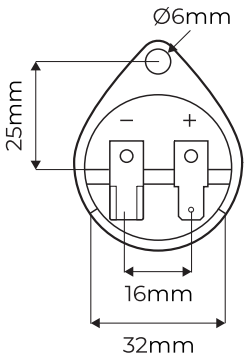


Trumpet Top

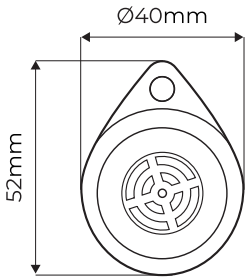


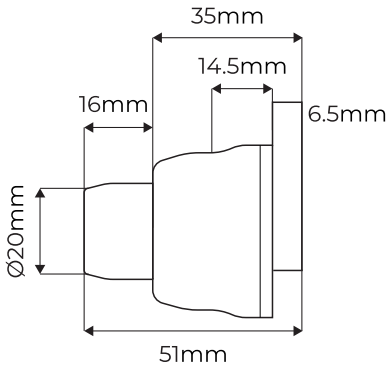


uksales@moflash.co.uk
moflashkm@moflash.com
exportsales@moflash.co.uk
UK +44(0)121 446 5322
FR +33(0)1 70 72 12 71
11 Upper Conybere Street
Highgate, Birmingham
B12 0EB, England
www.moflash.com



**APPROVALS & CONFORMITIES**

UK CA CE RoHS