210482
DCC 05 V 1.5 PSK-TSL
Inductive proximity sensor

- Stainless steel housing
- Metal connector M8
- Integrated amplifier
- Short-circuit protection
- Starting pulse suppression
- LED



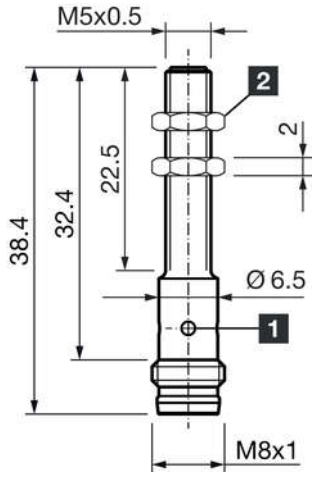

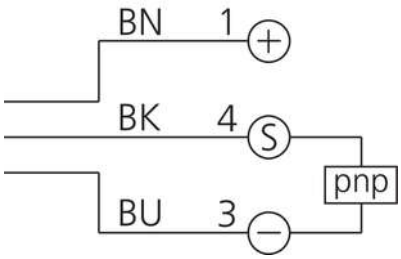

1) LED 4 x 90° (yellow) 2) Width over flats 7 mm BK: black BN: brown BU: blue

Function

Technical data (typ.)	+20°C, 24 V DC
Service voltage	10 … 30 V DC
Internal power consumption	< 10 mA
Insulation voltage endurance	500 V
Installation type	Flush
Thread	M5 x 0.5
Housing length	38.4 mm
Housing material	Stainless steel (AISI303)
Material of sensor probe	PBT
Protection class	III, operation on protective low voltage
Operating principle	inductive
Evaluation	digital
Design	Thread
Characteristics	increased operating distance
Product series	INM-300 Miniature Extended
Switching output	pnp, 100 mA, NO
Voltage drop (max.)	1.5 V (100 mA)
Switching distance (SN)	1.5 mm
Standardized measuring plate	4 x 4 x 1 mm
Switching hysteresis (max.)	1 … 20 %
LED Anzeige	Yes

210482
DCC 05 V 1.5 PSK-TSL
Inductive proximity sensor

Technical data (typ.)	+20°C, 24 V DC
Switching frequency	5000 Hz
Ambient temperature during operation	-25 … +70 °C
Protection type	IP 67
Connection	Connector, M8, 3-pin, A-coded
Connection cable	TK …

More information / accessories	https://www.di-soric.com/210482

© di-soric . Right to change reserved