PRODUCT DETAILS
ARTICLE: 19891

WHEEL A 150X40/50 RB SWIVEL FORK P60



Wheel series A

Wheels with cast polyurethane coating 95 Sh.A on polyamide 6 center. Wheel fitted with standard roller bearing.

Castor series P60

P60 series, heavy duty pressed steel forks, swivel with hardened steel double races & 'water resistant' protections. Finish: zincplated.

Technical data

Wheel diameter	D	150 mm
Tyre width	E	40,0 mm
Bore diameter	d	20 mm
Weight article		2,100 kg
Hub width	L	50 mm
Overall height	H	194 mm
Top plate outer dimensions	AxB	135x110 mm
Bolt hole spacing	axb	96x56 mm
Bolt hole spacing	axb	105x75 mm
Bolt hole spacing	axb	105x80 mm
Fixing bolt diameter	g	M10
Offset	F	50 mm
Fork width	U	50 mm
Load Capacity		400 kg

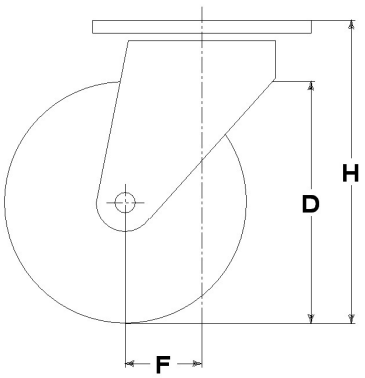

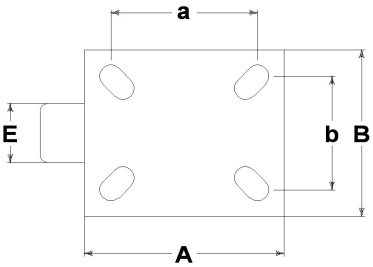

Related Articles

Spare part wheel: 4513
Version with footguard: 19891PP
Version with trailing brake: 19891FR
Version with trailing brake and footguard: 19891FRPP

GENERAL INFORMATION / RECOMMENDATIONS AND WARNINGS
The cited text and the complete catalogue in their most up-dated versions are available in the OEM's website page www.lagspa.it/downloads. The dimensions, descriptions, specifications and illustrations herein are indicative and subject to variations without notice. The fact that products are illustrated herein does not necessarily imply they are available from stock nor does it place us under any obligation to supply them. Tests carried out refer to the original products with original accessories: the replacement of one of the components with others of different manufacture might prevent the same results from being achieved and will automatically invalidate any guarantee. Please contact our technical service concerning any special application.