- KPC-0A Suitable for KSI, KSJ,KWR Single Phase Relay
- KPC-1A Suitable for KMT, KSQ Three Phase Relay
- KPC-2A Suitable for KSIM Single Phase Relay
- RoHS Compliant



KPC-0A

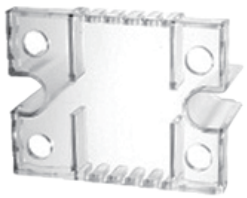

KPC-2A



KPC-1A

Ordering Information

KPC	-0	A
KPC Series	0: Single Phase Type 1: Three Phase Type 2: Mini	Series Number

Outline Dimensions

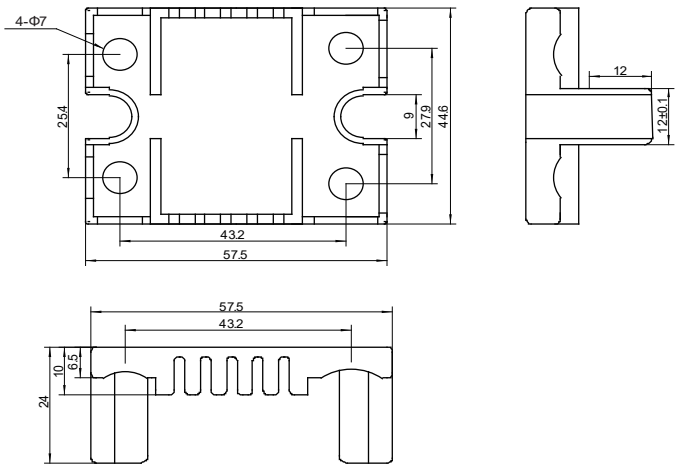

KPC-0A

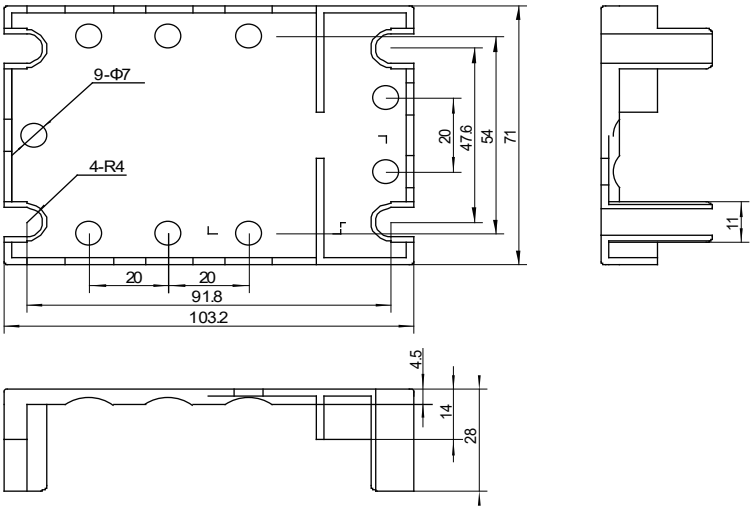

KPC-1A

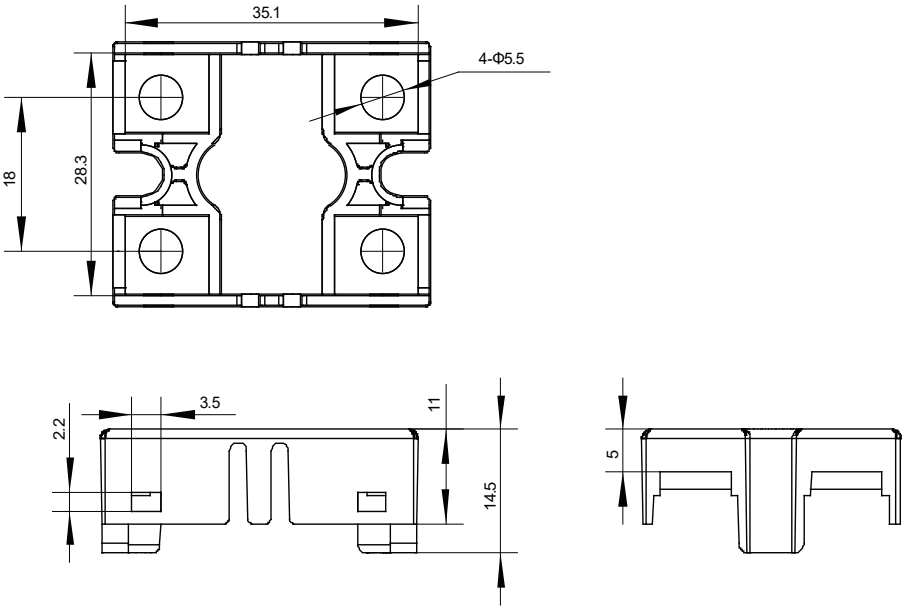

KPC-2A

Agency Approvals (Certification)

Trademark Change Notification

Due to the company's strategic development needs, Xiamen Kudom Electronics Technology Co., Ltd will be acquired by i-Autoc (Xiamen) Investment Co., Ltd from 1st of July 2019. After the acquisition, all the products by Xiamen Kudom Electronics Technology Co., will no longer use Kudom trademark, but use i-Autoc trademark. The details of the change are as follows.

The original trademark KUDOM will be changed to i-Autoc. The original trademark KUDOM will still be used until 30th June 2019.

This is a change to the trademark only, the Company Name, Manufacturing Location, Management Team, Product Part Numbers and Safety Approval Licence Numbers (cUL, TUV, CCC, S-mark Etc) are to remain the same.