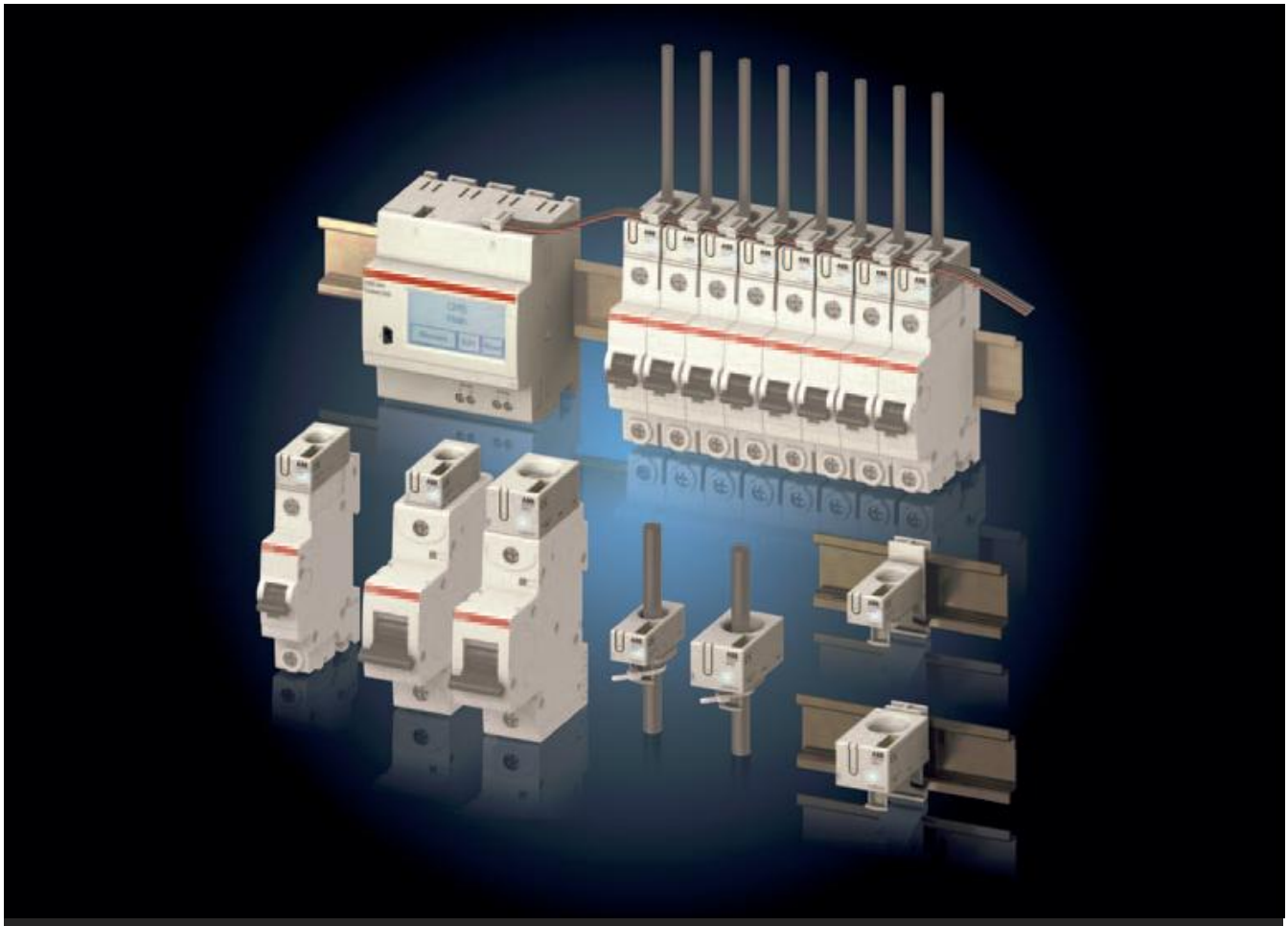

Current Measurement System (CMS)
A new level of efficiency and availability

Power and productivity
for a better world™

CMS – Current Measurement System
A system full of benefits

The CMS is a multichannel measurement system for the branch monitoring of alternating (AC) and direct (DC) currents. The sensors can be mounted easily within power distribution units (PDUs). Due to the unique compact size, the system is also ideal as a retrofit solution for existing installations. Great importance has been placed on the user-friendliness, high accuracy and a wide measurement range (up to 160 A).

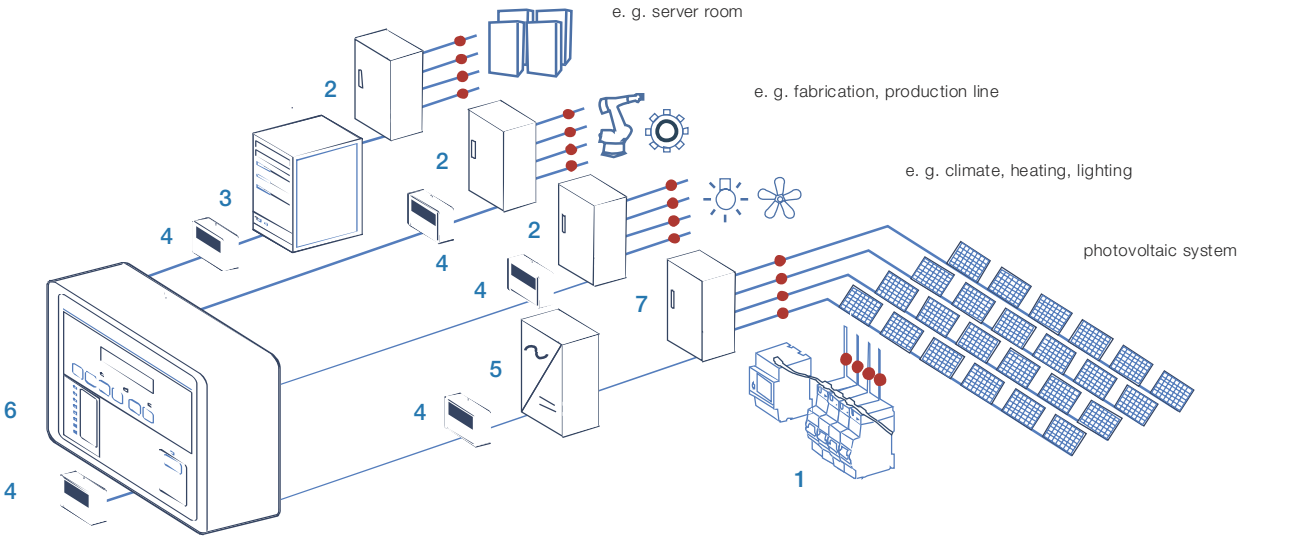

1 CMS system (● measurement points)
2 Subdistribution
3 UPS system
4 Energy meters
5 Power inverter
6 Main distribution
7 Combiner box

Minimal space requirements
Small, smaller, CMS – All that is required for effective measuring is placed in the width of a sugar cube.



Easy installation
The sensors are mounted in a few easy steps. The connection technology can be installed without special tools and there is no longer any need for expensive conventional cabling.



User-friendly commissioning
Configuration is easy: The intuitive navigation layout allows the system to be set up on the touch screen. Within minutes, it is ready to start measuring.



A sensor for all types of current
Whether it is DC, AC or mixed current: CMS sensors record each type within a wide measurement range of up to 160 A.



Always retrofit- and expandable
The system can be expanded or modified at any time thanks to its flexible and modular design.
Sensors can even be installed one-by-one at a later date.



Maximum reliability
The contact-free measurement method means that potential errors are prevented from the outset. The minimal cabling requires ensures maximum system stability.





CMS – sophisticated in every detail
The system at a glance

The quality of a current measurement system is determined by the perfect interaction and strength of all of its individual parts. This is where the CMS system from ABB sets the bar high: whether in compact size, technology, measurement results, user-friendliness or flexibility – every component and feature of the CMS is perfectly optimised for practical form and function.

The sensors are the most important part of the system and their compact size is impressive. The sensors can be easily installed anywhere thus easing installation and commissioning.

All of the sensors communicate with the control unit over the same connection. This does away with the confusing, star-shaped cabling, which is often required for analogue measuring transformers. It also saves time during installation and creates a lot of space in the power distribution unit.

The next important element of the CMS is the control unit, whose touch screen makes it easy and intuitive to use. This device processes all measurement data, shows measurement values and prepares them for individualised processing.

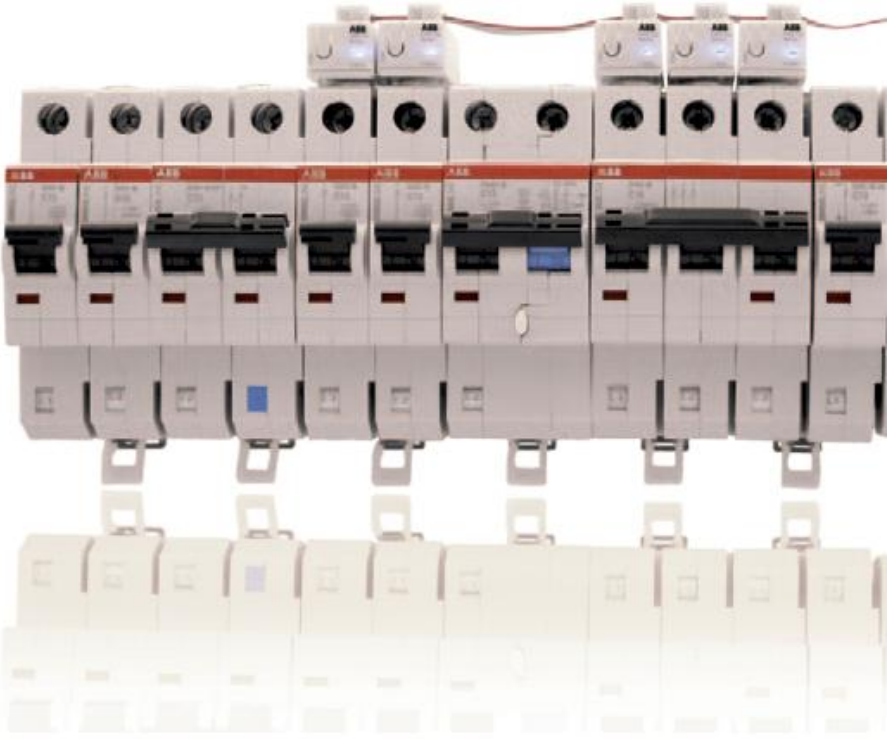



It is also very easy to initialise the sensors. You can assign the desired identifiers to the individual units with a few clicks on the control unit. The entire commissioning process only takes a few minutes. Quickly enabling to use all of the measurement functions and show them on the control units display screen.

You can remotely query measurement data via a Modbus interface (RS-485/Modbus RTU). The possibilities for further measurement value transmission and processing are nearly infinite.

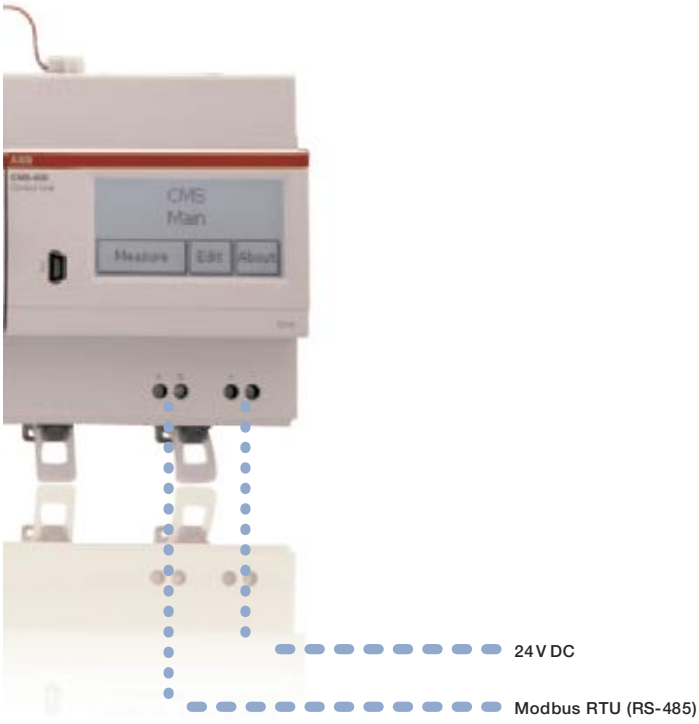

The sensors – the heart of the CMS
Top performance on minimal dimensions

No space wasted here: everything is built into an 18 or 25 mm wide unit to enable exact and effective measurements. This means that CMS sensors are among the most compact and high-performance sensors on the market.

Small size, huge performance: Whether AC, DC or mixed current, CMS sensors read all types of current up to 160 A (TRMS). Even upper sidebands in the signal trace are captured.

Every sensor has its own signal microprocessor, meaning measurement data is transmitted digitally via the bus interface to the control unit. This reduces the number of cables into the distribution units and maximises the security of the transmitted measurement values. Disruptions like those for analogue data are finally a thing of the past.



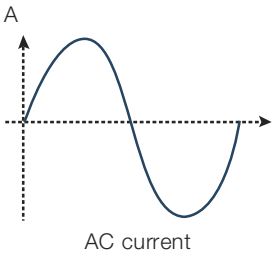

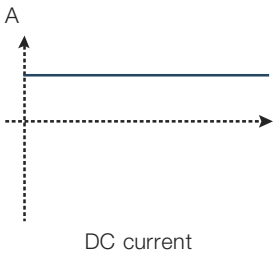

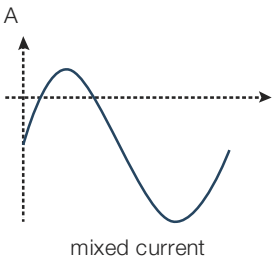

Installation flexibility
By the versatile mounting options

To integrate the sensors within PDUs there are four different mounting variants available.

Sensors for ABB installation devices

CMS-100PS series:
The sensors of this type can be installed on all ABB devices with twin terminals. Particularly this type of connection can be found on pro M compact and SMISSLINE devices.

CMS-100S8 / CMS-200S8 series:
These sensors can be mounted to all S800 devices with cage terminals.

Universally usable sensors

CMS-100DR / CMS-200DR series:
For the mounting on DIN rail.

CMS-100CA / CMS-200CA series:
With limited space in the PDU, this sensor can be mounted directly on the cable of the circuit to be measured.

Mounting **Sensortyp**	**pro M compact & SMISSLINE** for all ABB MCBs, RCDs, RCBOs with twin terminals 	**S800** for all ABB S800 devices with cage terminals 	**DIN-Rail** universal use 	**Cable tie** universal use 
Sensors 18 mm **CMS-100xx (80 A)** **CMS-101xx (40 A)** **CMS-102xx (20 A)**	**CMS-100PS** **CMS-101PS** **CMS-102PS** 	**CMS-100S8** **CMS-101S8** **CMS-102S8** 	**CMS-100DR** **CMS-101DR** **CMS-102DR** 	**CMS-100CA** **CMS-101CA** **CMS-102CA** 
Sensors 25 mm **CMS-200xx (160 A)** **CMS-201xx (80 A)** **CMS-202xx (40 A)**		**CMS-200S8** **CMS-201S8** **CMS-202S8** 	**CMS-200DR** **CMS-201DR** **CMS-202DR** 	**CMS-200CA** **CMS-201CA** **CMS-202CA** 

The control unit – the information centre
Measure and operate smarter

The control unit (CMS-600) has a user-friendly interface and is the centre for powering and managing the CMS system.

Up to 2 x 32 sensors can be connected to each control unit. 247 identifiers can be set on the device. Thereby it is possible to aquire thousands of measurement points over one bus line. This means the CMS can be used as a highly-efficient-measurement system, even in very large, extensively net-worked installations.



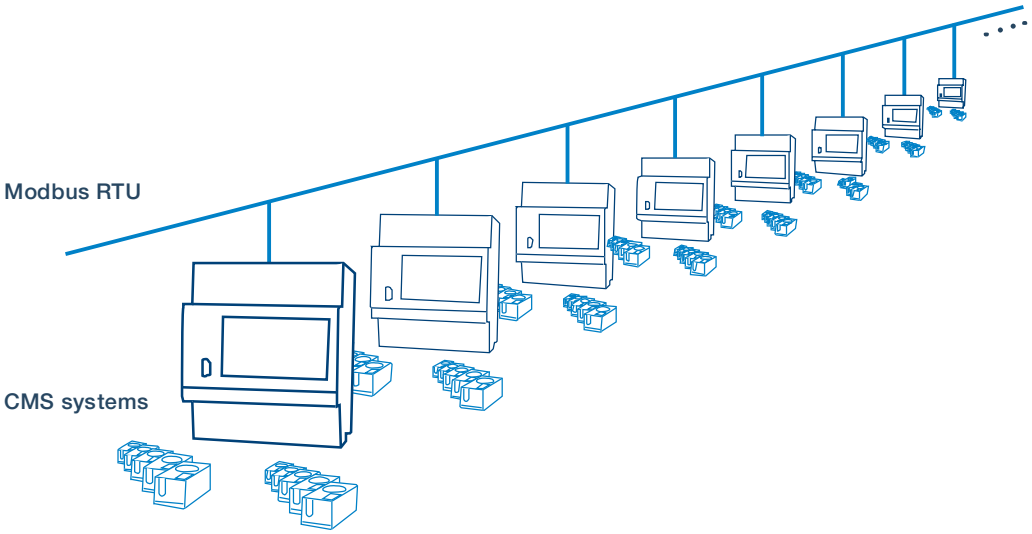

Straightforward operation
Reach your goal quickly by touch

The control unit's touch screen is easy to operate. Even the most advanced technology is not worth much if it is too complicated to use.

Special attention was paid to the menu navigation in order to create an intuitive system. It only takes a few clicks to reach the functions you want – or you can quickly return to your starting point. Complex user training is not necessary, either for initialisation or operational use. This saves a lot of time, effort, and not least, cost.

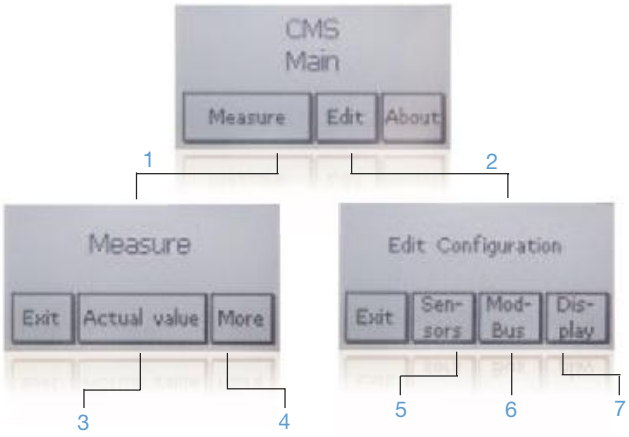

Crystal clear menu navigation

1 Measurement
2 Configuration
3 Display current measurement values
4 Display of max, min and hold values
5 Initialisation/parameterisation of sensors
6 Modbus configuration
7 Display settings



Early warning system
Prevent downtime

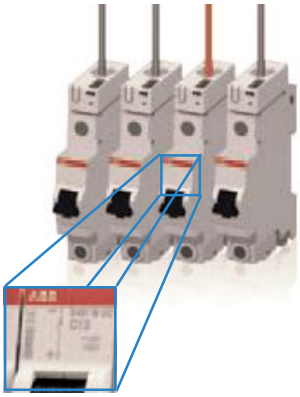

Overload warning

Extensions to buildings or plant can cause load changes on the supply lines. An overloaded line leads to the tripping of the line protection device. This interruption may have serious financial losses which can be avoided by permanent monitoring with the CMS.

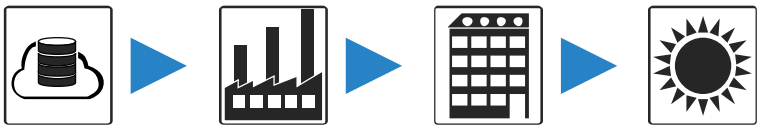

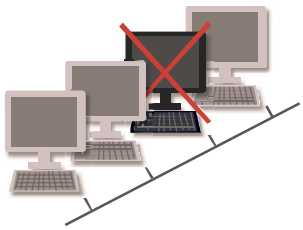

Load monitoring

The control of individual circuits provides information of the loads in order to ensure the desired operating mode. This enables the user to set up effective maintenance and react quickly to any failures thus preventing the failure of manufacturing or working processes.

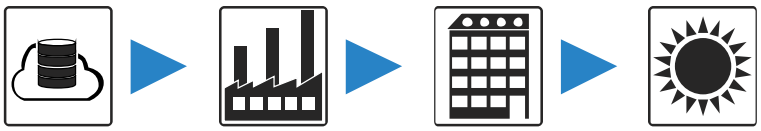

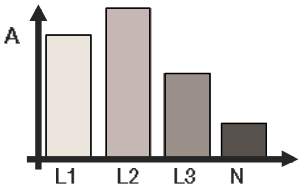

Phase monitoring

Unbalanced phases cause neutral currents, which can lead to the breakdown of the neutral conductor. Single-phase loads can't operate without the neutral. This failure can be easily detected by the constant monitoring of the neutral and the phase currents by the CMS.



Cost analysis
Cost saving and splitting

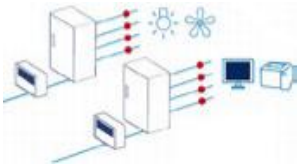

Cost savings by transparency

“You can’t improve what you can’t measure!”
To use electricity efficiently, it must first be clear where and how it is used. The current monitoring of each branch circuit of an installation gives us maximum transparency to detect extraneous current consumption and power-hungry devices easily.



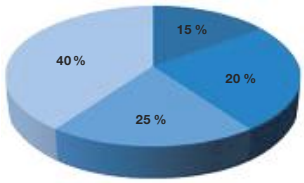

Cost splitting

If multiple parties share a building, there is often used the square meter share as a billing factor. The summation of the currents of the respective branch circuits represents a much more accurate and fairer breakdown factor for the costs.



ABB measurement components
Increasing the availability and energy efficiency

ABB offers a complete measurement portfolio to increase the availability and energy efficiency of electrical plants. To capture all electrical measurement parameters such as currents, voltages, frequency, power factor (cos φ), active, reactive, apparent power and energy consumptions there is a variety of instruments available. The devices can operate individually or in combination. To process and visualize the measurement data there is a comprehensive PLC range available.



TCP/IP

AC 500 PLC

Modbus RTU



ANR-96
Analyzer



DMTME-72



DMTME
Multimeter



M2M

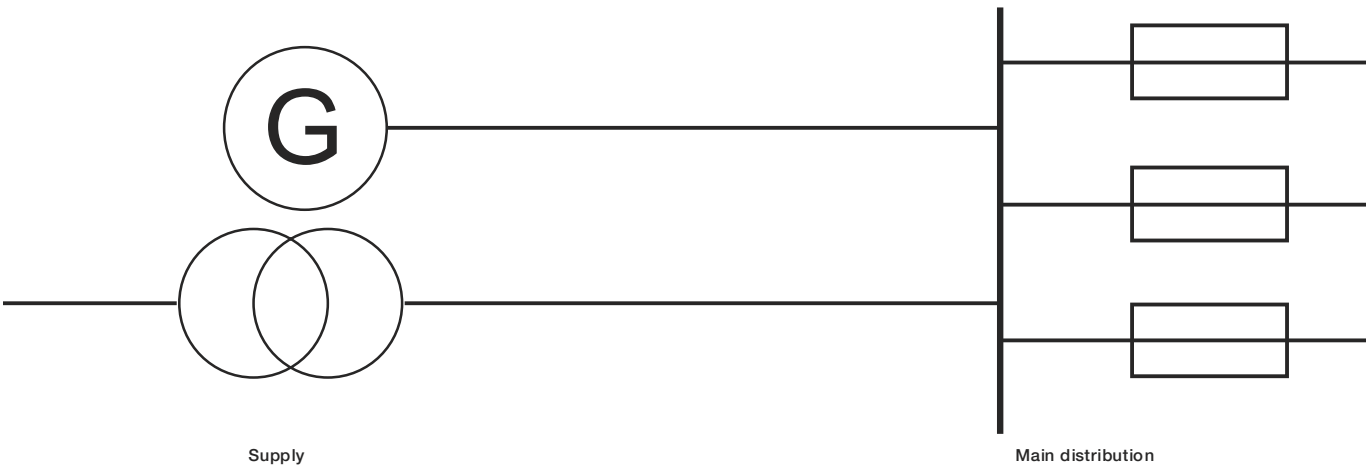

Supply

Main distribution

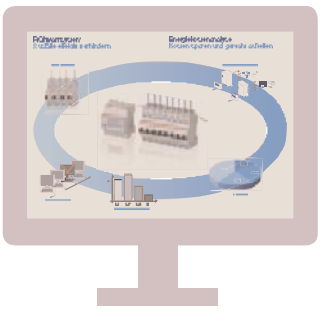



A series, B series
Energy meter



Current Measurement System CMS

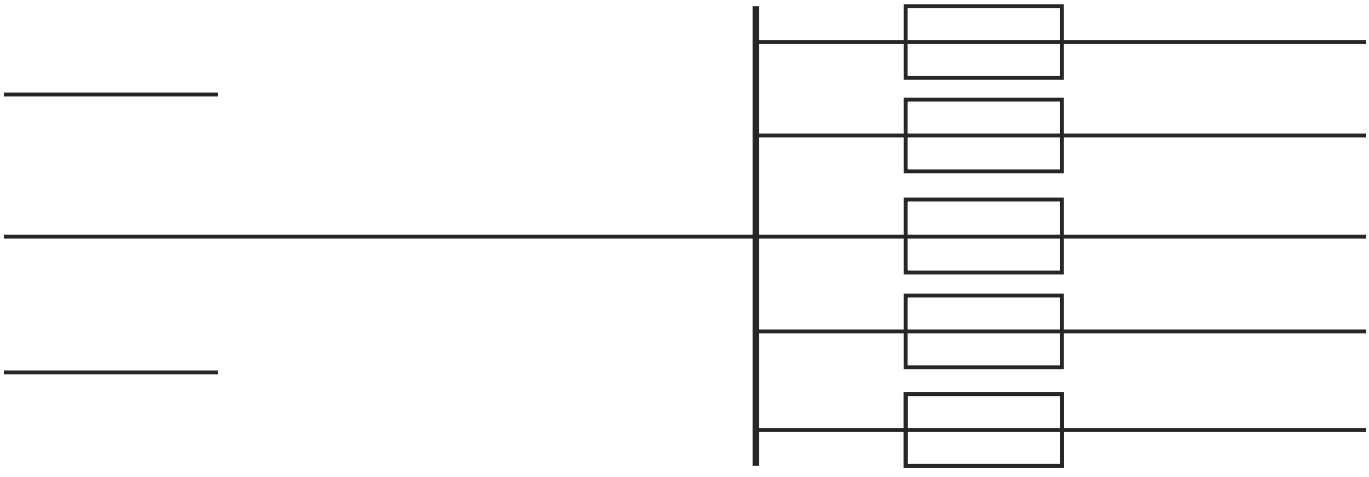

Sub distribution

CMS – Current Measurement System
Technical specifications



CMS-100PS



CMS-100S8



CMS-100DR



CMS-100CA

Sensors 18 mm		
Sensor type		
Measurement range	[A]	
Measurement values		
Crest factor of disorted wave forms		
AC Accuracy (TA = +25 °C)*		
AC Temperature coefficient*		
DC Accuracy (TA = +25°C)*		
DC Temperature coefficient*		
Resolution	[A]	
Sampling rate internal	[Hz]	
Settling time (±1 %)	[sec]	
Cable feed through	[mm]	
Insulation Voltage	[V]	
Overall dimensions		
CMS-100PS series	[mm]	
CMS-100S8 series	[mm]	
CMS-100DR series	[mm]	
CMS-100CA series	[mm]	



CMS-200S8



CMS-200DR



CMS-200CA

Sensors 25 mm		
Sensor type		
Measurement range	[A]	
Measurement values		
Crest factor of disorted wave forms		
AC Accuracy (TA = +25 °C)*		
AC Temperature coefficient*		
DC Accuracy (TA = +25°C)*		
DC Temperature coefficient*		
Resolution	[A]	
Sampling rate internal	[Hz]	
Settling time (±1 %)	[sec]	
Cable feed through	[mm]	
Insulation Voltage	[V]	
Overall dimensions		
CMS-200S8 series	[mm]	
CMS-200DR series	[mm]	
CMS-200CA series	[mm]	

* of full range

CMS – Current Measurement System
Technical specifications

	CMS-100xx	CMS-101xx	CMS-102xx
	80	40	20
	TRMS, AC 50/60 Hz, DC	TRMS, AC 50/60 Hz, DC	TRMS, AC 50/60 Hz, DC
	≤1.5	≤3	≤6
	≤± 0.5 %	≤± 0.5 %	≤± 0.5 %
	≤± 0.036 %	≤± 0.036 %	≤± 0.036 %
	≤± 0.7 %	≤± 1.0 %	≤± 1.7 %
	≤± 0.047 %	≤± 0.059 %	≤± 0.084 %
	0.01	0.01	0.01
	5000	5000	5000
	typ. 0.25	typ. 0.25	typ. 0.25
	10	10	10
	690 VAC/1500 VDC	690 VAC/1500 VDC	690 VAC/1500 VDC

	17.4 x 41.0 x 26.5	17.4 x 41.0 x 26.5	17.4 x 41.0 x 26.5
	26.5 x 45.5 x 31.8	26.5 x 45.5 x 31.8	26.5 x 45.5 x 31.8
	17.4 x 51.5 x 43.2	17.4 x 51.5 x 43.2	17.4 x 51.5 x 43.2
	17.4 x 41.0 x 29.0	17.4 x 41.0 x 29.0	17.4 x 41.0 x 29.0

	CMS-200xx	CMS-201xx	CMS-202xx
	160	80	40
	TRMS, AC 50/60 Hz, DC	TRMS, AC 50/60 Hz, DC	TRMS, AC 50/60 Hz, DC
	≤1.5	≤3	≤6
	≤± 0.5 %	≤± 0.5 %	≤± 0.5 %
	≤± 0.036 %	≤± 0.036 %	≤± 0.036 %
	≤± 0.7 %	≤± 1.0 %	≤± 1.7 %
	≤± 0.047 %	≤± 0.059 %	≤± 0.084 %
	0.01	0.01	0.01
	5000	5000	5000
	typ. 0.25	typ. 0.25	typ. 0.25
	15	15	15
	690 VAC/1500 VDC	690 VAC/1500 VDC	690 VAC/1500 VDC

	26.5 x 43.0 x 38.5	26.5 x 43.0 x 38.5	26.5 x 43.0 x 38.5
	25.4 x 43.0 x 43.2	25.4 x 43.0 x 43.2	25.4 x 43.0 x 43.2
	25.4 x 43.0 x 35.7	25.4 x 43.0 x 35.7	25.4 x 43.0 x 35.7

CMS – Current Measurement System
Technical specifications



CMS-600

Control Unit		
Supply voltage	[VDC]	24 (±10 %)
Power consumption	[W]	max. 24 W (with 64 sensors)
Interface		RS485 2-wire
Protocol		Modbus RTU
Data rate	[Baud]	2400 … 115 200
Data refresh time		≤ 1 sec for 64 sensors' results
Insulation Voltage	[V]	400 VAC
Screw-type terminals		0.5 … 2.5 mm², max 0.6 Nm
Mounting		DIN-rail 35 mm acc. DIN50022 or SMISSLINE TP busbar system
Dimension	[mm]	71.8 x 87.0 x 64.9 (4 DIN modules)

General Data – Sensors & Control Unit		
Operating temperature	[°C]	–25 … +70
Operating temperature	[°C]	–40 … +85
Standards		DIN EN 61010-1

CMS – Current Measurement System
Dimension drawings

CMS-100PS

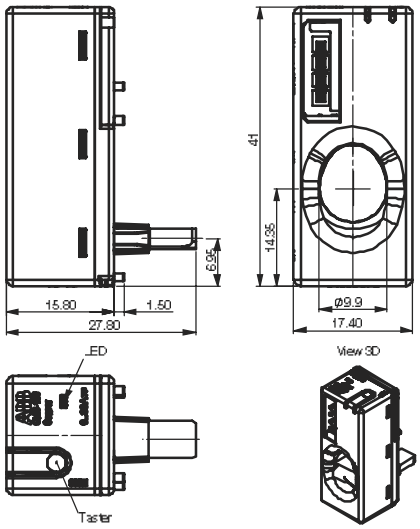

CMS-100S8

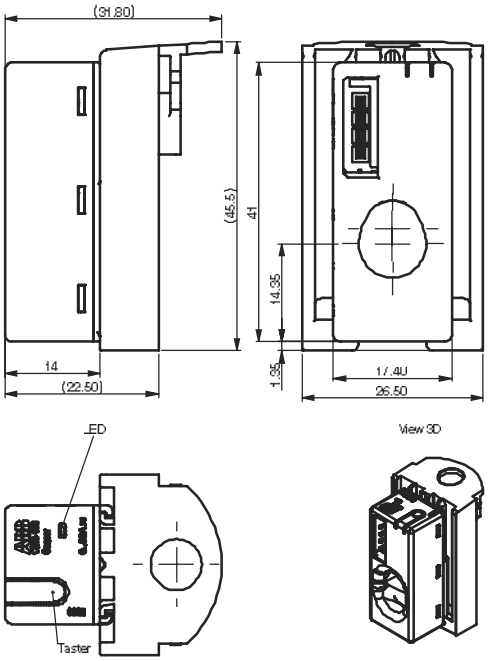

CMS-100DR

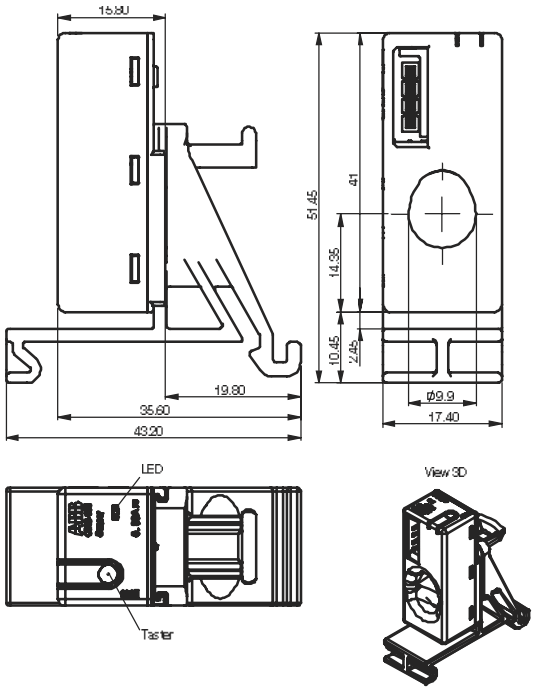

CMS-100CA

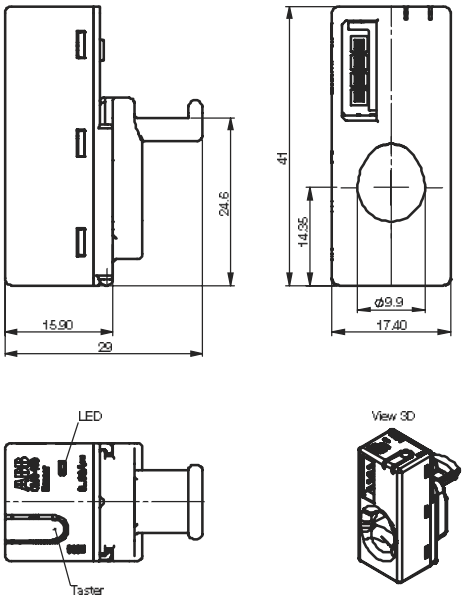

CMS – Current Measurement System
Dimension drawings

CMS-200DR

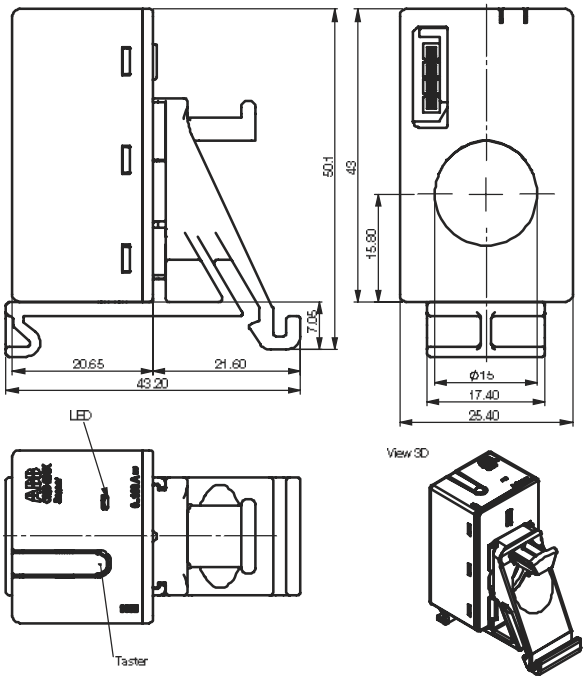

CMS-200CA

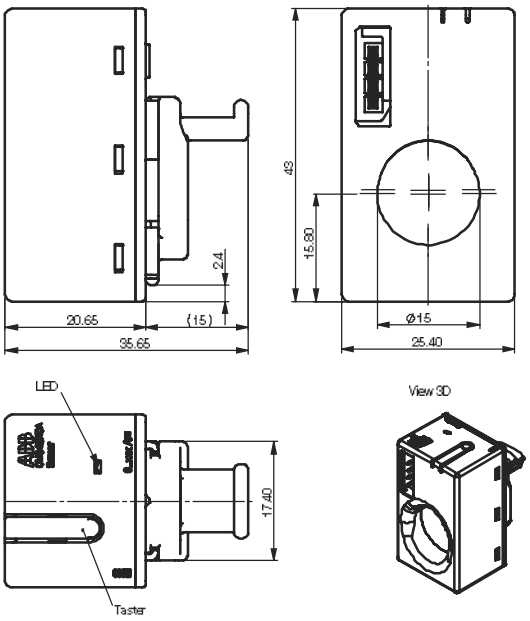

CMS-200S8

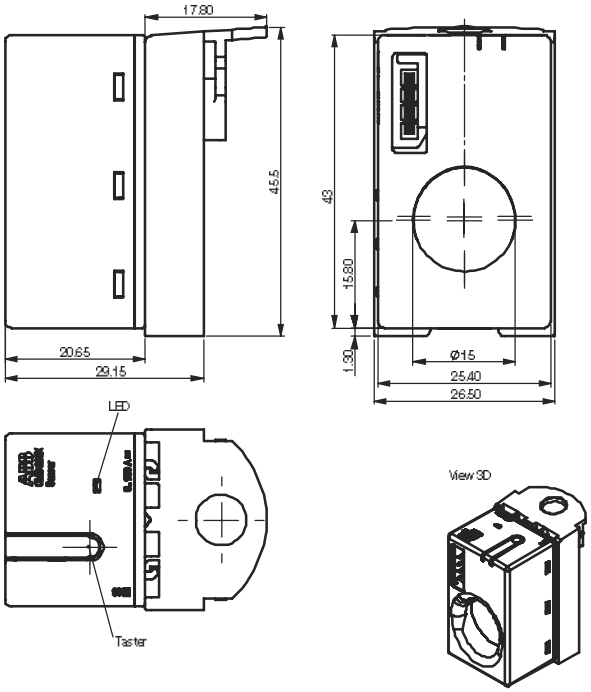

CMS-600

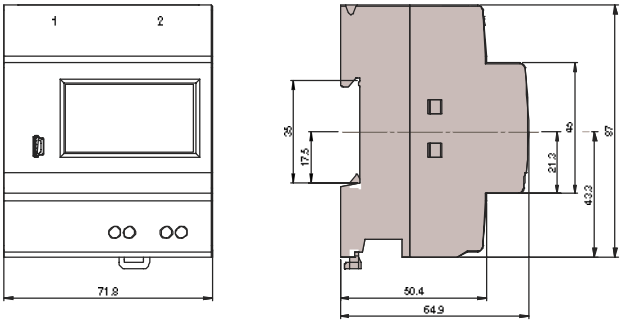

CMS – Current Measurement System
Ordering information

Description	Bbn 7612271 EAN	Order details Type code	 Order code	Price 1 piece	Weight 1 piece kg	Pack unit pc.
Sensors 18 mm for pro M compact & SMISSLINE installation devices with twin terminals						
80 A	419202	CMS-100PS	2CCA880100R0001		0.012	1
40 A	419219	CMS-101PS	2CCA880101R0001		0.012	1
20 A	419226	CMS-102PS	2CCA880102R0001		0.012	1
Sensors 18 mm for S800 installation devices with cage terminals						
80 A	426552	CMS-100S8	2CCA880124R0001		0.014	1
40 A	426569	CMS-101S8	2CCA880125R0001		0.014	1
20 A	426576	CMS-102S8	2CCA880126R0001		0.014	1
Sensors 18 mm for DIN-Rail mounting (universal use)						
80 A	426583	CMS-100DR	2CCA880128R0001		0.015	1
40 A	426590	CMS-101DR	2CCA880129R0001		0.015	1
20 A	426606	CMS-102DR	2CCA880130R0001		0.015	1
Sensors 18 mm for cable mounting (universal use)						
80 A	426613	CMS-100CA	2CCA880107R0001		0.011	1
40 A	426620	CMS-101CA	2CCA880108R0001		0.011	1
20 A	426637	CMS-102CA	2CCA880109R0001		0.011	1
Sensors 25 mm for S800 installation devices with cage terminals						
160 A	426644	CMS-200S8	2CCA880136R0001		0.028	1
80 A	426651	CMS-201S8	2CCA880137R0001		0.028	1
40 A	426668	CMS-202S8	2CCA880138R0001		0.028	1
Sensors 25 mm for DIN-Rail mounting (universal use)						
160 A	426675	CMS-200DR	2CCA880132R0001		0.030	1
80 A	426682	CMS-201DR	2CCA880133R0001		0.030	1
40 A	426699	CMS-202DR	2CCA880134R0001		0.030	1
Sensors 25 mm for cable mounting (universal use)						
160 A	426705	CMS-200CA	2CCA880117R0001		0.026	1
80 A	426712	CMS-201CA	2CCA880118R0001		0.026	1
40 A	426729	CMS-202CA	2CCA880119R0001		0.026	1
Control Unit (24VDC)						
Modbus RTU	418700	CMS-600	2CCA880000R0001		0.153	1
Accessories						
Flat cable 2 m	419233	CMS-800	2CCA880148R0001		0.017	1
Flat cable 3 m	424428	CMS-801	2CCA880149R0001		0.025	1
Connector set	419240	CMS-820	2CCA880145R0001		0.024	35

Contact

Belgium
ABB ELECTRO n.v.
Hoge Wei, 27
1930 Zaventem
Belgium
Telephone +32 (0) 27 18 63 11
Telefax +32 (0) 27 18 66 66

www.abb.be

Brasil
ABB Ltda
Av. dos Autonomistas, 1496
06020-902-Osasco-SP
Brasil
Telephone +55 (0) 80 00 14 91 11
Telefax +55 (11) 36 88 99 77

www.abb.com.br

Czech Republic
ABB s.r.o.
Herspická 13
61900 Brno
Czech Republic
Telephone +420 54 31 45 50 3
Telefax +420 54 32 43 48 9

www.abb.cz/elsynn

Denmark
ABB AS
Meterbuen 33
2740 Skovlunde
Denmark
Telephone +45 44 50 44 50
Telefax +45 44 50 44 60

www.abb.dk

Finland
ABB OY
Domestic Sales
Hiomotie 13
P.O. Box 184
00381 Helsinki
Finland
Telephone +358 10 22 20 00
Telefax +358 10 22 22 91 3

www.abb.fi

France
ABB Entrelec
Division Commercial France
300 rue des Prés Seigneurs
ZA La Boisse – BP 90145
01124 Montluel Cedex
France
Telephone +33 (0) 825 38 63 55
Telefax +33 (0) 825 87 09 26

www.abb.fr

Great Britain
ABB Limited
Tower Court
Foleshill Enterprise Park
Courtaulds Way
Conventry
CV6 5NX
England
Telephone +44 (0) 24 76 36 85 00
Telefax +44 (0) 24 76 36 44 99

www.abb.co.uk

Ireland
Asea Brown Boveri Ltd.
Belgrad Road, Tallaght
Dublin 24
Ireland
Telephone +35 31 40 57 30 0
Telefax +35 31 40 57 33 2

www.abb.com/lowvoltage

Italy
ABB SACE S.p.A.
Line Protection Devices
Viale dell'Industria, 18
20010 Vittuone (MI)
Italy
Telephone +39 02 90 34 1
Telefax: +39 02 90 34 76 09

www.abb.it

Netherland
ABB b.v.
Automation Products
George Hintzenweg 81
3068 AV Rotterdam
Postbus 301
3000 AH Rotterdam
Netherland
Telephone +31 (0) 10 40 78 91 1
Telefax +31 (0) 10 40 78 09 0

www.abb.nl

Norway
ABB AS
Jacob Borchsgt. 6
P.O. Box 797 Brakeroya
3002 Drammen
Norway
Telephone +47 32 24 80 00
Telefax +47 32 24 79 34

www.abb.no

Poland
ABB Sp. z o. o.
Automation Products
ul. Zeganska 1
04-713 Warszawa
Poland
Telephone +48 22 51 64 441
Telefax +48 22 51 64 444

www.abb.pl

P.R. China
ABB (China) Ltd
Universal Plaza, 10 Jiuxianqiao Lu
Chaoyang District
100016 Beijing
P.R. China
Telephone +86 10 8456 6688
Telefax +86 10 8456 9907

www.abb.com.cn

Russian Federation
ABB Industrial & Building Systems Ltd.
30/1, bld. 2 Obrucheva St.
117861 Moscow, Russia
Telephone +7 495 960 2200
Telefax +7 495 960 2220

www.abb.ru/ibs

Singapore
ABB Pte Ltd
2 Ayer Rajah Crescent
Singapore 139935
Main Tel +65 6776 5711
Main Fax +65 6778 0222

www.abb.com.sg

Spain
ABB Automation Products, S.A.
c/Torrent d'Olla, 220
08012 Barcelona
Spain
Telephone +34 93 48 42 10 4
Telefax +34 93 48 42 20 1

www.abb.es

Sweden
ABB Automation
Technologies Cewe Control
Motorgräd 20
72161 Västeras
Sweden
Telephone +46 (0) 21 32 07 00
Telefax +46 (0) 21 12 60 01

www.abb.se

2CCC481001C0201

Due to possible changes in design and materials, the properties and dimensions contained in this catalogue should only be viewed as binding upon confirmation from ABB.

Power and productivity
for a better world™