Brand of NTN corporation

Technical data

UKFC215H

Bearing units



Grey cast housing, radial insert ball bearing with adapter sleeve,seal with slinger

KIT CONTENT

UK215G2H, FC215

VISUAL (S)

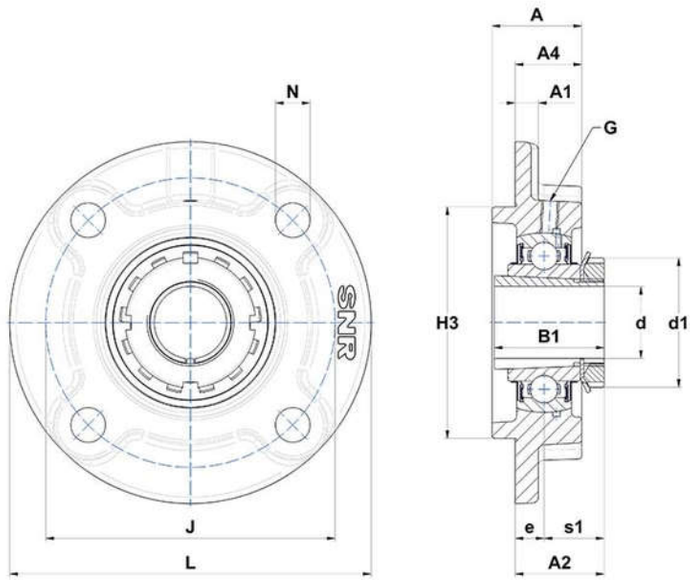

PRODUCT DEFINITION

Brand	SNR
A - Housing height	55 mm
A1 - Housing foot height / flange height	17 mm
A2 - Total height from mounting surface	53,5 mm
A4 - Housing height from mounting surface	39 mm
B - Width of Inner Ring	41 mm

UKFC215H
Bearing units

PRODUCT DEFINITION	
B1 - Overall width Inner Ring	73 mm
d - Shaft diameter	65 mm
d1 - Outer dia of eccent. Lock. collar / nut of adapter sleeve	98 mm
e - Distance mounting surface to bearing center	18 mm
G - Grease fitting	M10x1
H3 - Centering dia	160 mm
J - Mounting holes distance	184 mm
L - Housing width / diameter	220 mm
N - Mounting hole dimension	19 mm
s1 - Distance nut to middle of bearing raceway	35,5 mm

PRODUCT PERFORMANCE	
C - Dynamic load rating	66000000 mN
C0 - Static load rating	49500000 mN
Operating temperature min.	253,15 °K
Operating temperature max.	373,15 °K

OTHER FEATURES	
Mass	7,47 kg
Adapter sleeve designation	H2315