Inductive sensor
BI5U-Q08-AP6X2

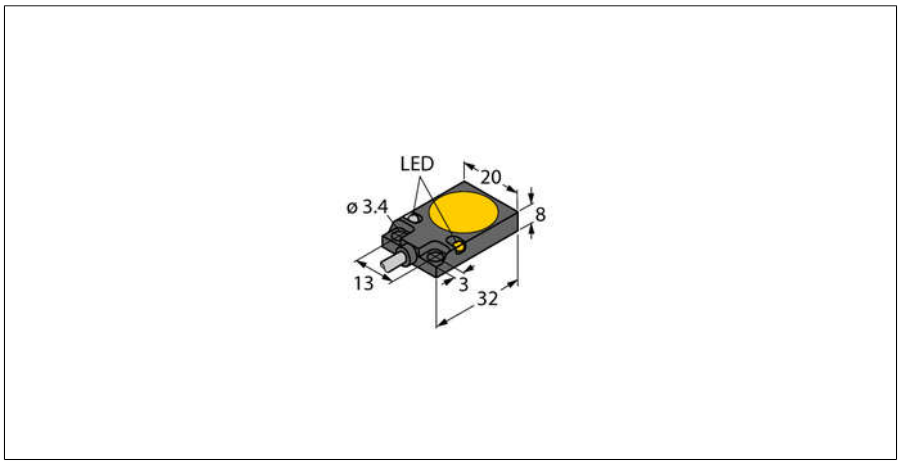

- **Rectangular, height 8 mm**
- **Active face on top**
- **Metall, zinc die casting**
- **DC 3-wire, 10…30 VDC**
- **NO contact, PNP output**
- **Cable connection**

Wiring Diagram

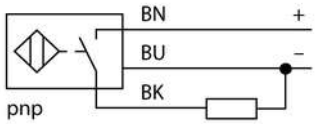

Functional principle

Inductive sensors detect metal objects contactless and wear-free. *uprox*® Factor 1 sensors have significant advantages due to their patented ferrite-coreless multicoil system. They detect all metals at the same large switching distance and are resistant to magnetic fields.

Type code	BI5U-Q08-AP6X2
Ident no.	1608901
Rated switching distance Sn	5 mm
Mounting conditions	flush
Assured switching distance	≤ (0,81 x Sn) mm
Repeatability	≤ 2 % of full scale
Temperature drift	≤ ± 10 %
	≤ ± 15 %, ≤ -25 °C v ≥ +70 °C
Hysteresis	3…15 %
Ambient temperature	-30…+85 °C
Operating voltage	10… 30VDC
Residual ripple	≤ 10 % U_{ss}
DC rated operational current	≤ 200 mA
No-load current I_0	≤ 15 mA
Residual current	≤ 0.1 mA
Rated insulation voltage	≤ 0.5 kV
Short-circuit protection	yes/ cyclic
Voltage drop at I_e	≤ 1.8 V
Wire breakage / Reverse polarity protection	yes/ complete
Output function	3-wire, NO contact, PNP
Protective insulation	⧈
Switching frequency	0.25 kHz
Construction	rectangular, Q08
Dimensions	32 x 20 x 8 mm
Housing material	Metal, GD-Zn, black lacquer
Active area material	Plastic, PPA, yellow
Connection	cable
Cable quality	4 mm, LifY-11Y, PUR, 2m
Cable cross section	3 x 0.25 mm^2
Vibration resistance	55 Hz (1 mm)
Shock resistance	30 g (11 ms)
Protection class	IP67
MTTF	874 years acc. to SN 29500 (Ed. 99) 40 °C
Power-on indication	LED green
Switching state	LED yellow

Edition • 2016-02-12T11:25:18+01:00

Hans Turck GmbH & Co.KG ● D-45472 Mülheim an der Ruhr ● Witzlebenstraße 7 ● Tel. 0208 4952-0 ● Fax 0208 4952-264 ● more@turck.com ● www.turck.com

Inductive sensor
BI5U-Q08-AP6X2

Distance D	40 mm
Distance W	15 mm
Distance G	30 mm
Width of the active face B	17 mm

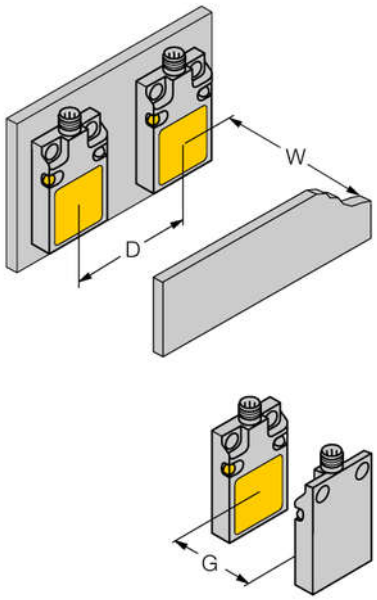

Edition • 2016-02-12T11:25:18+01:00

Hans Turck GmbH & Co.KG ● D-45472 Mülheim an der Ruhr ● Witzlebenstraße 7 ● Tel. 0208 4952-0 ● Fax 0208 4952-264 ● more@turck.com ● www.turck.com