Data sheet

Power supply CP-C.1 24/10.0
Product revision: uncoated ≥ H, coated ≥ E
High-performance primary switch mode power supply

The CP-C.1 power supplies are ABB's high-performance and most advanced range. With excellent efficiency, high reliability and innovative functionality they are prepared for the most demanding industrial applications. These power supplies have a 150 % integrated power reserve and operate at an efficiency of up to 94 %. They are equipped with overheat protection and active power factor correction. Combined with a broad AC and DC input range and extensive worldwide approvals the CP-C.1 power supplies are the preferred choice for professional DC applications. Giving the power to control.



2CDC 271 010 V0017

Characteristics

- Rated output voltage 24 V DC
- Power reserve design delivers up to 150 % at $T_a \leq 40$ °C
- Output voltage adjustable via front-face rotary potentiometer "OUTPUT Adjust", 22.5-28.5 V
- Input voltage range 85-264 V AC, 90-300 V DC
- High efficiency
- Low power dissipation and low heating
- Free convection cooling (no forced cooling)
- Devices with coated PCBAs for harsh environments and with extended temperature range
- Open-circuit, overload and short-circuit stable
- Integrated input fuse
- DC OK - signaling output "13-14" (relay), power reserve signaling output "$I > I_R$ (transistor)
- Redundancy unit CP-C.1-A-RU offering true redundancy, available as accessory
- Various certifications and approvals (see overview, document no. 2CDC114098D0201)

Ordering details - CP-C.1

Input voltage range	Rated output voltage / current	PCBA	Type	Order code	Weight (1 pc.) kg (lb)
85-264 V AC, 90-300 V DC	24 V DC / 10 A	uncoated	CP-C.1 24/10.0	1SVR360663R1001	1.07 (2.36)
		coated	CP-C.1 24/10.0-C	1SVR360663R2001	1.09 (2.40)

Related products

Description	Redundancy unit	PCBA	Type	Order code	Weight (1 pc.) kg (lb)
2 inputs each up to 20 A and 1 output up to 40 A	≤ 28.5 V and ≤ 40 A	uncoated	CP-C.1-A-RU	1SVR360060R1001	1.04 (2.29)
		coated	CP-C.1-A-RU-C	1SVR360060R2001	1.04 (2.29)

Table of contents

Characteristics 1
Ordering details - CP-C.1 1
Abbreviations 2
Functions 3
Application 3
Power reserve 3
Signaling output 3
Adjustable output voltage 3
LED and relay state table 4
LEDs and signaling outputs 4
Operating mode 5
Parallel operation 5
Parallel connection of power supplies for increased power 5
Parallel connection of power supplies for redundancy 6
Mounting 7
Mounting positions 7
Mounting CP-C.1 in position 7 7
Demounting 8
Electrical connection 8
24 and 48 V DC connection 8
Connection to TN, TT networks 9
Safety instructions and warnings 10
Technical data 11
Input circuit - Supply circuit 11
User interface 11
Output circuit - Power output 11
Signaling outputs 12
General data 12
Electrical connection 12
Environmental data 13
Isolation data 13
Standards / Directives 14
Electromagnetic compatibility 14
Technical diagrams 15
Efficiency diagrams 15
Characteristic curve of output 16
Characteristic curve of temperature 16
Dimensions 17
Further documentation 17

Abbreviations

MCB - Miniature circuit breaker

AC - Alternating current

DC - Direct current

LED - Light emitting diode

L - Line

N - Neutral

PE - Protective earth

PLC - Programmable logic controller

DIN - Deutsche Industrie Norm

PELV - Protective extra low voltage

TN - Terre neutre (neutral grounded)

TT - Terre terre (grounded network)

IT - Isolé terre (isolated network)

VDE - Verein Deutscher Elektrotechniker

IP20 - international protection code

AWG - American wire gauge

IEC - International electrotechnical comission

UL - Underwriters laboratories

EN - Europäische Norm

SELV - Safety extra low voltage

EMC - Electromagnetic compatibility

SEMI - Semiconductor equipment materials international

FCC - Federal communication comission

CISPR - Comité international spécial des perturbations radioélectriques

CSA - Canadian standards association

Functions

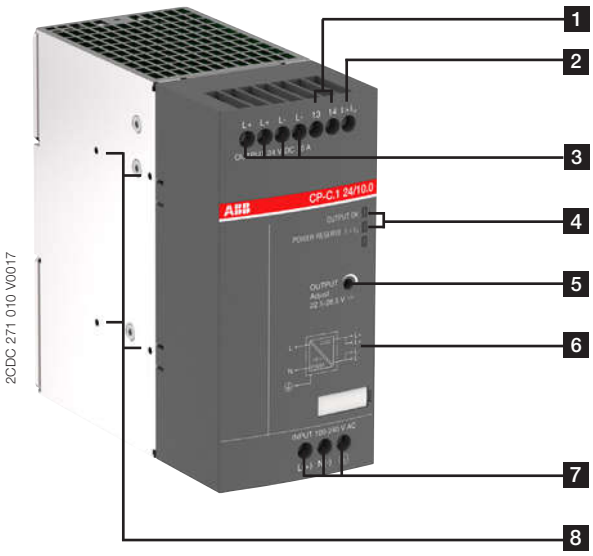

1 **13-14: Relay output to signal output OK**

2 **I > I_R: Power reserve transistor output**

3 **OUTPUT L+, L-: Output terminals**

4 **Indication of operational states**

OUTPUT OK: Green LED

POWER RESERVE I > I_R: Yellow LED

5 **OUTPUT Adjust: Rotary potentiometer - Adjustment of output voltage 22.5 - 28.5 V DC**

6 **Circuit diagram**

7 **INPUT L(+), N(-), ⏚/PE: Input terminals**

8 **Side mounting screw holes for DIN rail adapter / lateral mounting**

Application

The primary switch mode power supply CP-C.1 has a wide AC or DC input voltage range. Furthermore the CP-C.1 is equipped with capacitors that ensure a hold-up time of at least 50 ms. This enables worldwide usage and permits safe operation in fluctuating networks and battery-powered applications.

The CP-C.1 power supplies with the robust metallic housing and the reliable construction are suitable for applications in industrial environments. The CP-C.1-C units, having coated PCBAs, enable usage in even harsh industrial environments.

The power reserve of up to 150 % enables trouble-free starting of heavy loads eliminating the need of usage of an oversized power supply.

Power reserve

The primary switch mode power supply CP-C.1 is equipped with a power reserve functionality to handle the start-up of particulary heavy loads (e.g. of a capacitive load or a motor). To ensure that heavy loads are started up, the CP-C.1 delivers additionally up to 150 % of the rated output current to secure the operation of the application. This status is displayed by the yellow LED labelled POWER RESERVE I > I_R.

Signaling output

For the communication of the status of the power supply the CP-C.1 is equipped with a relay output to signal output OK as well as a transistor output to indicate when the power reserve is active. These signals can be used for communication to a higher level control system e.g. a PLC.

Adjustable output voltage

The CP-C range power supplies feature a continuously adjustable output voltage of 22.5 to 28.5 V DC. Thus they can be optimally adapted to the application, e.g. compensating the voltage drop caused by a long line length.

LED and relay state table

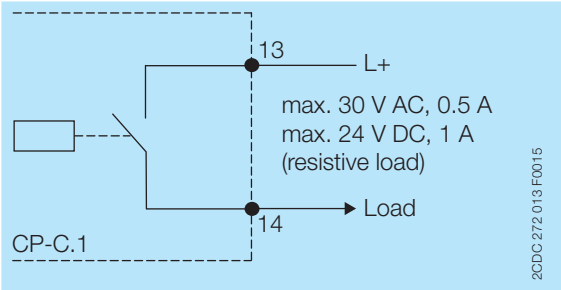

Output OK - relay output

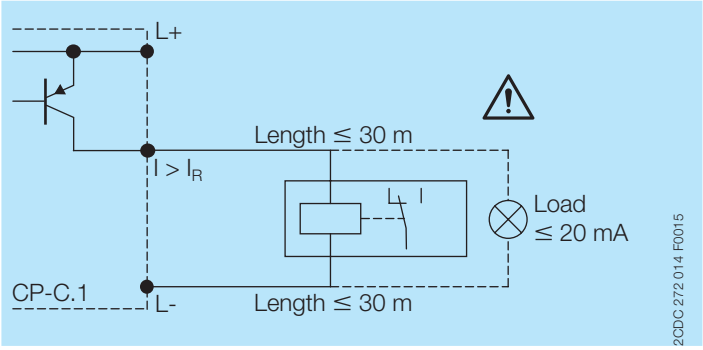

Power reserve - transistor output

LEDs and signaling outputs

Output voltage		Output OK: LED green	Relay 13-14
	≥ 92 % of U_{out}	⌐¬	Closed —
	< 90 % of U_{out}	⌐¬⌐¬	Open —/

Output current		Power reserve: LED yellow	Transistor $I>I_R$
	$I \leq I_R$	OFF	ON (closed)
	$I > I_R$	⌐¬	OFF (open)

It is possible to use the messaging and signaling functionality with power supplies connected in parallel. The parallel operation has no influence on the function.

Operating mode

Parallel operation

There are two main reasons for a parallel connection of power supplies:
- Increase of power
- Redundancy

Up to 5 devices of the same type can be connected in parallel. For safe and reliable operation it is important to follow the recommendations given in the following section.

Parallel connection of power supplies for increased power

If the current required by the load is higher than a single power supply can deliver, for example after the expansion of an existing installation, an increase of the output power can be obtained by connecting power supplies in parallel. The following prerequisites have to be fulfilled when connecting power supplies in parallel for the purpose of increased power:
- The paralleled devices must be of the identical type.
- Repeated voltage drops on the supply lines or at the terminals would lead to unbalanced load at the common connection point. To prevent this, you have to observe the following when connecting the power supply units:
  - Identical lengths of the load supply lines.
  - Identical conductor cross sections of the load supply lines.
  - Terminal screws have to be fastened with the same torque to guarantee equal contact resistances.
  - The output voltages of the power supplies must not differ by more than 50 mV. Otherwise, safe operation is not possible.

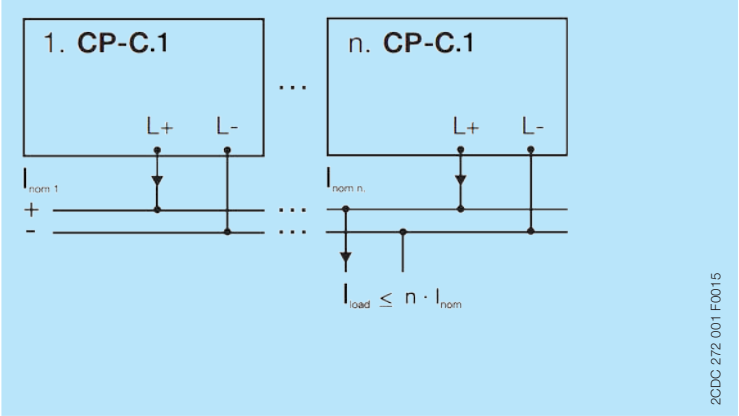

Installation for increased power

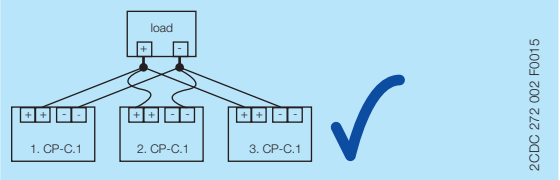

Correct wiring for increased power

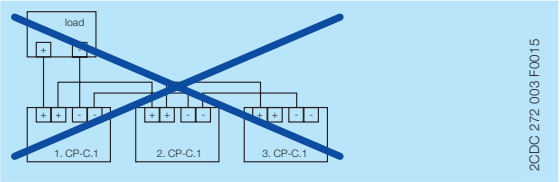

Incorrect wiring for increased power

Important:

The devices must not be connected directly to each other! This could lead to an overload of the terminals since the terminals are dimensioned for the maximum output current of a single power supply only. Always use a common connection point!

Parallel connection of power supplies for redundancy

Several power supplies are connected in parallel in order to guarantee continuous operation of the system if one power supply fails. CP-C.1 can be used in two different redundancy modes depending on what type of redundancy is required:

– Simple redundancy, n+1
– True redundancy

Simple redundancy, n+1 redundancy

For simple or n+1 redundancy, the power supplies are connected in parallel like for the increase of capacity. To achieve redundancy the current required by the load must not exceed the maximum output power of one single power supply (in case of “1+1 redundancy”) or n power supplies (where n is max. 4).

We recommend connecting the primary sides of the power supplies to different phases of the mains in order to obtain continuous operation of the system if one phase fails.

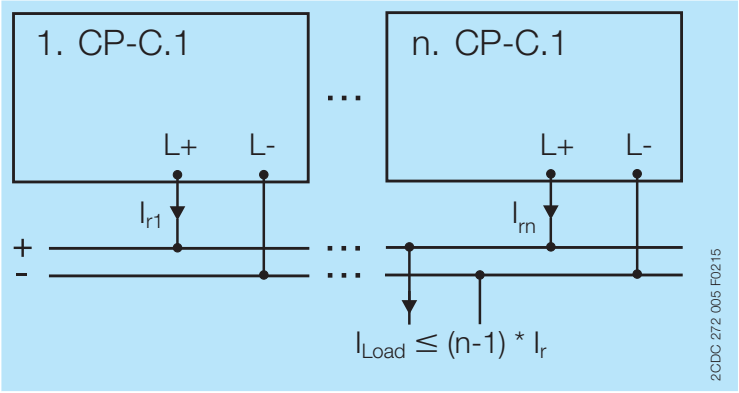

Simple redundancy or n+1 setup

True redundancy

True redundancy gives higher system availability compared to simple or n+1 redundancy.

In a true redundancy setup the power supplies are decoupled from each other with decoupling diodes. This protects the individual power supplies from affecting each other in case of failure of one unit or short cirucit on the secondary side or in the wiring.

For two inputs of up to 20 A and one output up to 40 A the ABB redundancy unit CP-C.1-A-RU (available as an accessory) can be used.

The inputs of these units are connected to the terminals L+ and L- of the power supplies. The loads are supplied directly from the outputs of the redundancy unit.

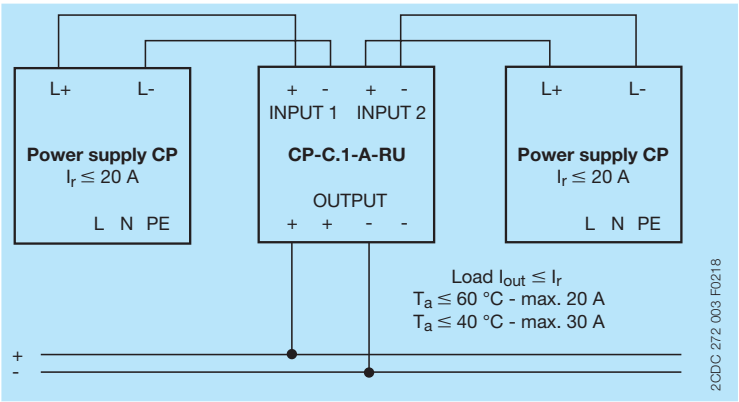

True redundancy using a CP-C.1-A-RU redundancy unit

Mounting

To mount the power supply place the upper edge of the DIN rail adapter on the upper edge of the DIN rail holding the unit slightly tilted upwards as shown in the illustration. Then tilt the unit down until the latch snaps onto the DIN rail.

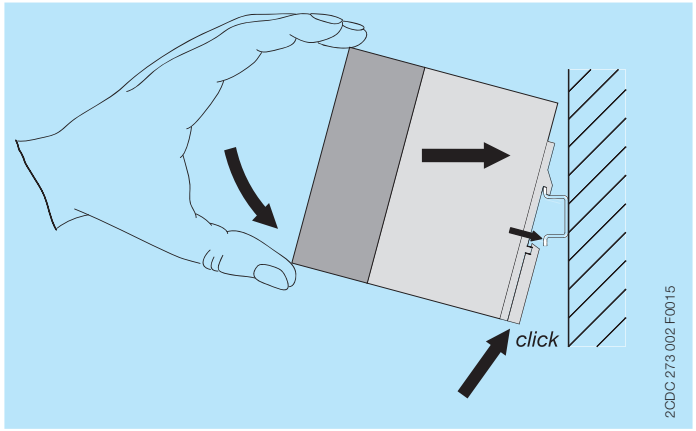

Mounting positions

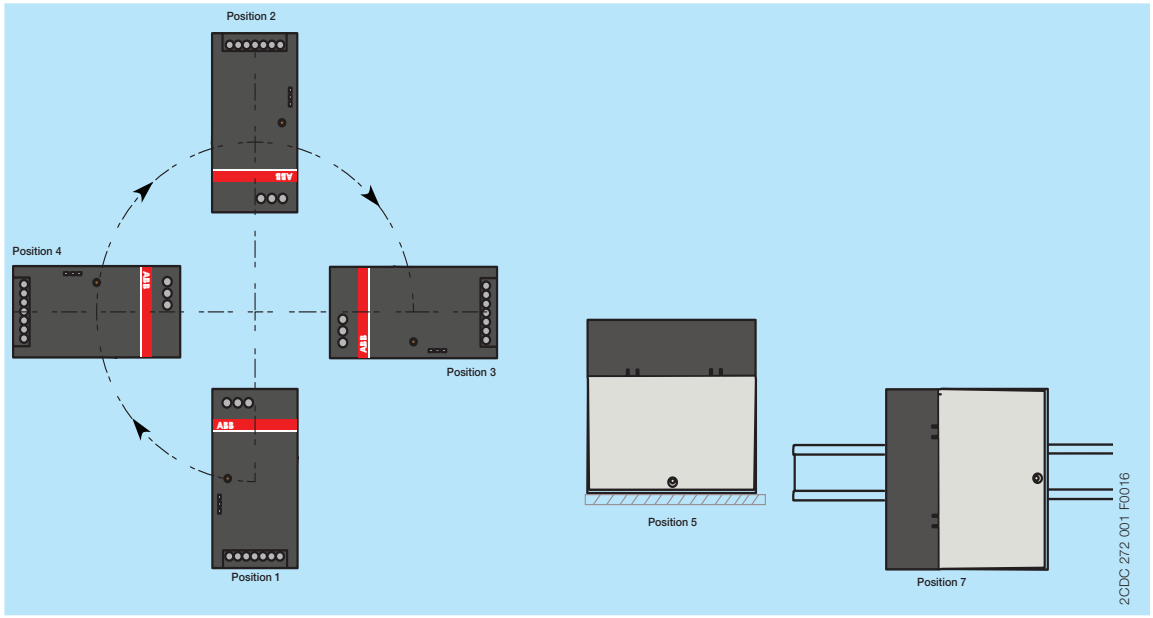

In order to ensure a sufficient convection in mounting position 1 and 7, the minimum distance to other modules must not be less than 25 mm in vertical direction and 25 mm in horizontal direction. For the derating of the output current, see the characteristic curve of temperature. Details for other mounting positions on request.

Mounting CP-C.1 in position 7

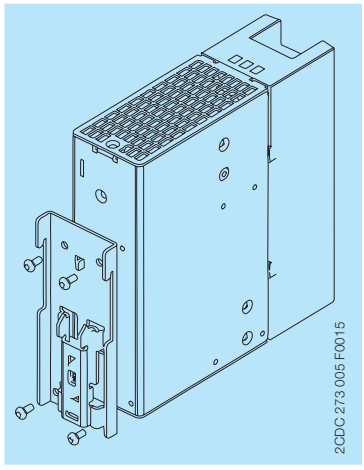

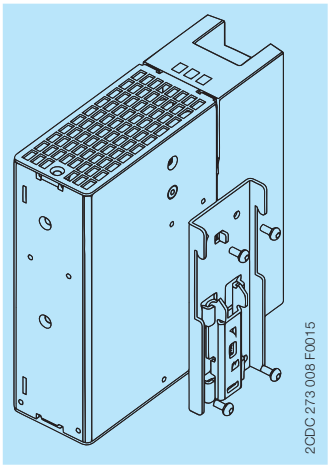

To mount the power supply in position 7 remove the DIN rail adapter that is fastened with 4 screws and attach it on the side of the power supply.

Screwdriver: Torx T10
Tightening torque: 0.7 ±0.1 Nm

Demounting

To release the power supply pull the latching lever downwards with a screwdriver and press the upper side of the the latching lever down. The device can be unhinged from the DIN rail and removed.

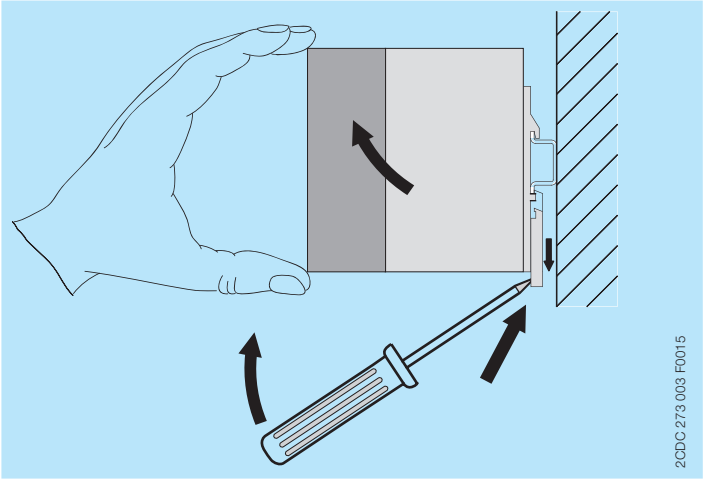

Electrical connection

Connect the input terminals "L“ to line and "N" to neutral conductor or to + and - with DC supply "+" to "L" and "-" to "N". The protective earth conductor PE must be connected before putting the device into operation. The installation must be executed acc. to EN 60950. Provide a suitable disconnecting device (e. g. line protection switch, MCB or fuse) in the supply line. The input side of the power supply is protected by an internal input fuse.

The wiring, cable choice and their protection shall comply to the local electrical standard. We recommend choosing the conductor cross-section as large as possible in order to minimize voltage drops. Check the polarity. The device is overload, short-circuit and open-circuit proof. The secondary side of the power supply is electrically isolated from the input and internally not earthed (SELV) and can be earthed for PELV.

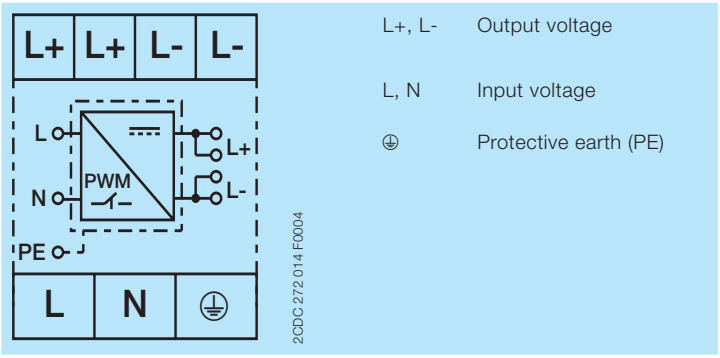

Connection diagram

24 and 48 V DC connection

The connection diagram below shows how to setup two power supplies for +/-24 or 48 V DC output voltage.

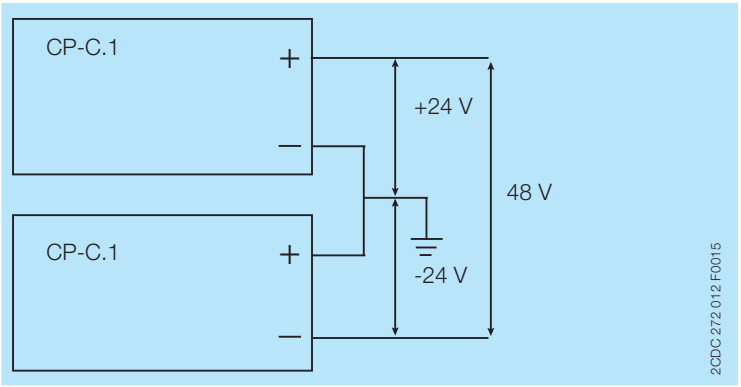

Connection diagram for +/-24 or 48 V DC output voltage

Connection to TN, TT networks

The user must refer to and the installation comply with local electrical codes.

The power supply can be connected to electrical supply systems with various earthing systems according to the diagrams below.

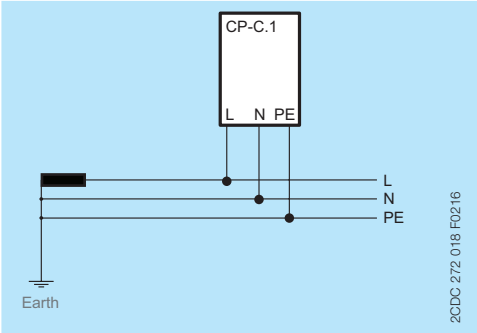

TN-S 1-phase

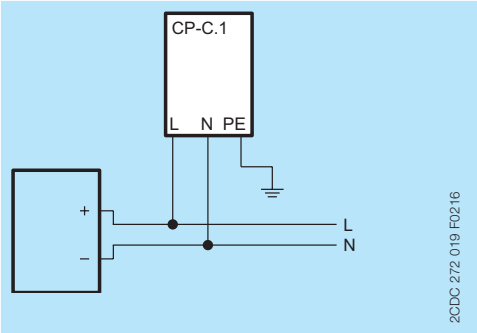

DC source, e.g. battery

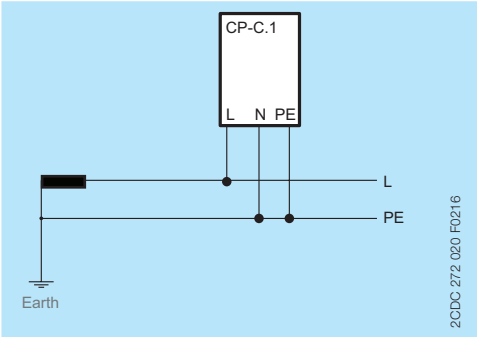

TN-C 1-phase

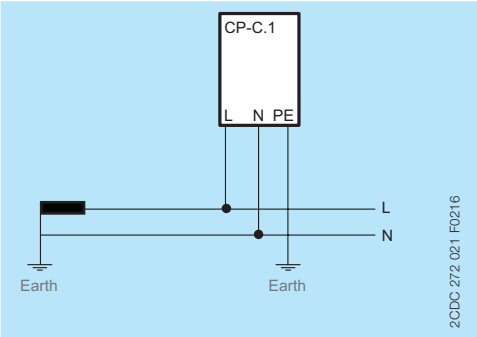

TT 1-phase

In AC networks the input voltage range is defined by -15...+10 % of the rated input voltage. However, in DC networks the rated input voltage is equal to the input voltage range.





Safety instructions and warnings

In operation pay attention to:

- Do not modify the installation (primary and secondary side)! High current! Risk of electric arcs and electric shock (danger to life)!
- Risk of burns: Depending on the operation conditions the housing can become hot.
- The device contains no user serviceable parts. In any case of device malfunction please send the unit back to manufacturer.

The device must be installed by qualified persons only and in accordance with the specific national regulations (e. g. VDE, etc.).

The CP-C.1 is a chassis-mounted unit. It is maintenance-free and does not contain any integral setting elements and should therefore not be opened.

Before any installation, maintenance or modification work:

- Read the operating and installation instructions carefully and completely!
- Disconnect the system from the supply network and protect against switching on!



Before start of operation the following must be ensured:

- Connection to mains or DC supply according to the specific national regulations for class of protection I.
- Power supply cables and unit must be sufficiently fused. A disconnecting device has to be provided for the end product to disengage unit and supply cables from supply mains if required.
- The protective earth conductor must be connected to the terminal PE.
- Rate the output lines for the output current of the power supply and connect them with the correct polarity.
- In order to ensure sufficient convection the distance to the other devices has to be considered.

Attention! Improper installation/operation may impair safety of personnel and cause operational difficulties or destruction of the unit.

Attention! Danger to life!

Never carry out work when voltage is present. The power supply contains components with high stored energy and circuits with high voltage! Do not introduce any objects into the unit and do not open the unit.

With some units of this range the output is capable of providing hazardous energy. Ensure that the service personnel is protected against inadvertent contact with parts carrying energy.

If the internal fuse is blown most probably the device is defect. In this case an examination of the device by the manufacturer is necessary.

Technical data

Data at T_a = 25 °C, U_{in} = 230 V AC and rated values, unless otherwise indicated

Technical data for
CP-C.1 24/10.0 product rev. < F see data sheet no. 2CDC114092D0201 Rev. B
CP-C.1 24/10.0 product rev. F and CP-C.1 24/10.0-C product rev. < C see data sheet no. 2CDC114100D0201 Rev. A
CP-C.1 24/10.0 product rev. G and CP-C.1 24/10.0-C product rev. C, D see data sheet no. 2CDC114100D0201 Rev. B

Input circuit - Supply circuit

		CP-C.1 24/10.0	CP-C.1 24/10.0-C
		L (+), N (-)	
Rated input voltage U_{in}		100-240 V AC, 90-300 V DC	
Input voltage range	AC	85-264 V AC	
	DC	90-300 V DC	
Typical input current	at 115 V AC	2.3 A	
	at 230 V AC	1.2 A	
Typical power consumption	at 230 V AC	256 W	
Rated frequency		DC, 50/60 Hz	
Frequency range	AC	45-65 Hz	
Inrush current, cold state		< 11 A	
Let-through energy I^2t , cold state	at 230 V AC	< 1,5 A^2s	
Discharge current towards PE		< 3.5 mA	
Hold-up time	at 115 V AC	min. 40 ms	
	at 230 V AC	min. 40 ms	
Internal input fuse		T6.3 A, not exchangeable	
Recommended backup fuse for wire protection at 1.5 mm^2		1 pole miniature circuit breaker ABB type S 200	
	characteristic	B or C	
	max. rating	16 A	
Power factor correction (PFC)		yes, active	
Transient overvoltage protection		yes, varistor	

User interface

Indication of operational states			
Output voltage	LED 'OUTPUT OK ' (green)	ON	92 % adjusted U_{out}
		flashing	90 % adjusted U_{out}
Power reserve	LED 'I > I_R' (yellow)	OFF	I ≤ I_R
		ON	I > I_R

Output circuit - Power output

		L+, L-	
Rated output voltage		24 V DC	
Tolerance of the output voltage		±1 %	
Adjustment range of the output voltage		22.5-28.5 V DC	
Rated output power		240 W	
Rated output current I_R	- 25 °C ≤ T_a ≤ 60 °C	10.0 A	-
	- 40 °C ≤ T_a ≤ 60 °C	-	10.0 A
Reserve output current	- 25 °C ≤ T_a ≤ 40 °C	15.0 A continuously	-
	- 40 °C ≤ T_a ≤ 40 °C	-	15.0 A continuously
Short-circuit current limiting		15.5 A	
Derating of the output current	60 °C < T_a ≤ 70 °C	2.5 %/°C	
Deviation width of output voltage	static output voltage deviation 25-100 %	< 1%, class C	
	dynamical 0-100 %	< 5 %, class B	
	change of input voltage within the rated input voltage	< 1 ms, class A	
Control time		< 0.1 %, class A	
Starting time after applying the supply voltage		< 500 ms, class C	
Rise time		< 10 ms	
Fall time		< 20 ms	
Residual ripple and switching peaks	BW = 20 MHz	< 120 mVpp, class A	
Parallel connection		yes, up to 5 devices, to enable redundancy and to increase power, current not symmetrical	
Series connection		yes, max. 2 devices to increase voltage	

	CP-C.1 24/10.0	CP-C.1 24/10.0-C
No-load, overload and short-circuit behavior		
Characteristic curve of output	U/I characteristic curve with power reserve	
Short-circuit protection	continuous short-circuit stability	
Short-circuit behavior	current limiting	
Resistance to reverse feed	≤ 35 V DC	
Overload protection	constant current limitation	
Overtemperature protection	protection by switch off in case of overtemperature (thermal protection), automatic restart	
No-load protection	continuous no-load stability	
Starting of capacitive loads	yes	

Signaling outputs

OUTPUT OK signaling output		
Type of output	13-14	relay, n/o contact
ON (contact closed)		92 % adjusted U_{out}
OFF (contact open)		90 % adjusted U_{out}
Contact ratings	max. switching voltage / current	30 V AC - 0.5 A / 24 V DC - 1 A (resistive load)
	min. switching voltage / current	5 V DC / 1 mA

POWER RESERVE signaling output		
Type of output	$I > I_R$	transistor, short-circuit proof
Active / ON (closed)		$I > I_R$
Inactive / OFF (open)		$I \leq I_R$
Ratings	voltage/current	24 V DC / ≤ 20 mA

General data

Efficiency	at rated output power	up to 94 %
Power loss	at rated output power	16 W
	at 50% of rated output power	12 W
	at no load	< 3.6 W
Duty time		100 %
MTBF	acc. to MIL 217 HDBK	on request
Dimensions		see ‘Dimensional drawings’
Material of housing	cover	zinc-coated sheet-steel
	housing shell	aluminium
	front	plastic, PA6, V-0
Mounting		DIN rail (IEC/EN 60715), snap-on mounting
Mounting position		1 and 7
Minimum distance to other units	horizontal	25 mm (0.98 in)
	vertical	25 mm (0.98 in)
Degree of protection (IEC/EN 60529)	housing / terminals	IP20 / IP20
Protection class (IEC/EN 61140)		I

Electrical connection

Input circuits (L(+), N(-), PE)		
Connecting capacity	rigid	0.5-4.0 mm² (20-10 AWG)
	fine-strand with(out) wire end ferrule	0.5-2.5 mm² (20-12 AWG)
Stripping length		8 mm (0.315 in)
Tightening torque		0.5 Nm (4.4 lb.in)
Recommended screw driver		PH1 / Ø 4.0 x 0.8 mm

		CP-C.1 24/10.0	CP-C.1 24/10.0-C
Output circuits (L+, L+, L-, L-)			
Connecting capacity	rigid	0.5-4.0 mm² (20-10 AWG)	
	fine-strand with(out) wire end ferrule	0.5-2.5 mm² (20-12 AWG)	
Stripping length		8 mm (0.315 in)	
Tightening torque		0.5 Nm (4.4 lb.in)	
Recommended screw driver		PH1 / Ø 4.0 x 0.8 mm	
Signaling output (13-14, I > I_R)			
Connecting capacity	rigid	0.5-4.0 mm² (20-10 AWG)	
	fine-strand with(out) wire end ferrule	0.5-2.5 mm² (20-12 AWG)	
Stripping length		8 mm (0.315 in)	
Tightening torque		0.5 Nm (4.4 lb.in)	
Recommended screw driver		PH1 / Ø 4.0 x 0.8 mm	
Maximum cable length (applicable for I>I_R)		30 m	

Environmental data

Ambient temperature range	operation	-25…+70 °C (-13...+158 °F)	-40…+70 °C (-40...+158 °F)
	rated output power	-25...+60 °C (-13...+140 °F)	-40...+60 °C (-40...+140 °F)
	storage	-40…+85 °C (-40...+185 °F)	
	transportation	-40…+85 °C (-40...+185 °F)	
Climatic class (IEC/EN 60721-3-1)	storage	1K2 (-40...+85 °C / -40...+185 °F)	
Climatic class (IEC/EN 60721-3-2)	transportation	2K2 (-40…+85 °C / -40...+185 °F)	
Climatic class (IEC/EN 60721-3-3)	operation	3K3 (-25…+70 °C / -13...+158 °F)	3K3 (-40…+70 °C / -40...+158 °F)
Damp heat, cyclic (IEC/EN 60068-2-30)		test Db: 55°C, 2 cycles	
Vibration (IEC/EN 60068-2-6)		test Fc: 10-58 Hz, amplitude ±0.15 mm, 58-150 Hz, 2 g, 10 sweep cycles each axis	
Shock, half-sine (IEC/EN 60068-2-27)		test Ea: 30 g, 6 ms, 3 pulses each axis; bump 20 g, 11 ms, 100 pulses each axis	
Coated PCBA		no	yes
Gaseous corrosive environment withstand test (IEC/EN 60068-2-60)		-	testing method: 4 testing period: 21 days ambient conditions: 25 °C, 75 % r.h. air/volume change rate per hour: 3-6 sample not energized during exposure gas concentrations acc. ISA-S71.04.2013 Harsh Group A, G3 IEC 60721-3.3 acc. 3C2/3C3 - $H_2S \geq 100 \pm 10$ ppb - $SO_2/SO_3 \geq 300 \pm 20$ ppb - $Cl_2 \geq 100 \pm 10$ ppb - $NO_x \geq 1250 \pm 20$ ppb

Isolation data

Rated impulse withstand voltage U_{imp} (EN 50178)	input circuit / output circuit	4 kV (1.2/50 µs)
	input circuit / PE	4 kV (1.2/50 µs)
	input circuit / relay contact	4 kV (1.2/50 µs)
	output circuit / relay contact	0.5 kV (1.2/50 µs)
	relay contact / PE	0.5 kV (1.2/50 µs)
	output circuit / PE	0.5 kV (1.2/50 µs)
Rated insulation voltage U_i (EN 50178)	input circuit / output circuit	300 V
	input circuit / PE	300 V
	input circuit / relay contact	300 V
	output circuit / relay contact	50 V
	relay contact / PE	50 V
	output circuit / PE	50 V
Overvoltage category (EN 50178)	< 2000 m	III
	2000…5000 m	II
Overvoltage category (IEC/EN 60950-1)	< 2000 m	II
	2000…5000 m	I
Pollution degree		2
Protective separation (IEC/EN 60950-1)	input circuit / output circuit	yes
	input circuit / relay contact	yes

	CP-C.1 24/10.0	CP-C.1 24/10.0-C

Standards / Directives

Standards	IEC/EN 61204	
Low Voltage Directive	2014/35/EU	
EMC Directive	2014/30/EU	
ATEX Directive	-	2014/34/EU
RoHS Directive	2011/65/EU	
Electrical safety	IEC/EN 60950-1	
Industrial control equipment / General Use Power Supplies	UL 508 / CSA 22.2 No 107.1	
Electronic equipment for use in power installations	EN 50178	
Protective extra low voltage	PELV (EN 50178)	
Safety extra low voltage	SELV (IEC/EN 60950-1)	
Limitation of harmonic line currents	IEC/EN 61000-3-2	

Electromagnetic compatibility

Low-voltage power supplies, d.c. output – Part 3: Electromagnetic compatibility (EMC)		IEC/EN 61204-3
Interference immunity to		IEC/EN 61000-6-2
electrostatic discharge (ESD)	IEC/EN 61000-4-2	level 4, 8 kV / 15 kV (criterion A)
radiated, radio-frequency, electromagnetic field	IEC/EN 61000-4-3	level 3, 10 V/m (criterion A)
electrical fast transient / burst	IEC/EN 61000-4-4	level 4, 4 kV / 2 kV (criterion A)
surge	IEC/EN 61000-4-5	level 4, L/N 2 kV (criterion A) level 4, L,N/PE 4 kV (criterion A)
conducted disturbances, induced by radio-frequency fields	IEC/EN 61000-4-6	level 3, 10 V (criterion A)
voltage dips, short interruptions and voltage variations	IEC/EN 61000-4-11	class 3
harmonics and interharmonics	IEC/EN 61000-4-13	class 3 (criterion A)
conducted, common mode disturbances in the frequency range 0 Hz to 150 kHz	IEC/EN 61000-4-16	level 3, 10 V
Interference emission		IEC/EN 61000-6-3
limits for harmonic current emissions	IEC/EN 61000-3-2	class A
limitation of voltage changes etc.	IEC/EN 61000-3-3	compliant
information technology equipment radio disturbance characteristics limits and methods of measurement	IEC/CISPR 22, EN 55022	class B
industrial scientific and medical (ISM) radio-frequency equipment electromagnetic disturbance characteristics limits and methods of measurement	IEC/CISPR 11, EN 55011	class B
Voltage sags	SEMI F47	passed
Federal Communications Commission	FCC15	compliant

Technical diagrams

Data at T_a = 25 °C, U_{in} = 230 V AC and rated values, typical values unless otherwise indicated

Efficiency diagrams

The efficiency and thus the power loss depends on the output current, input voltage, output voltage and ambient temperature as illustrated in the diagrams below.

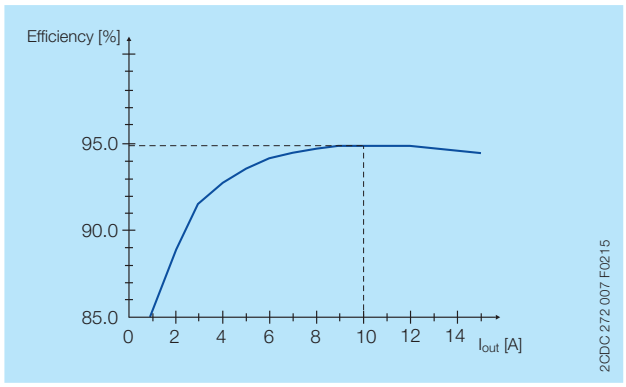

Typical efficiency over output current

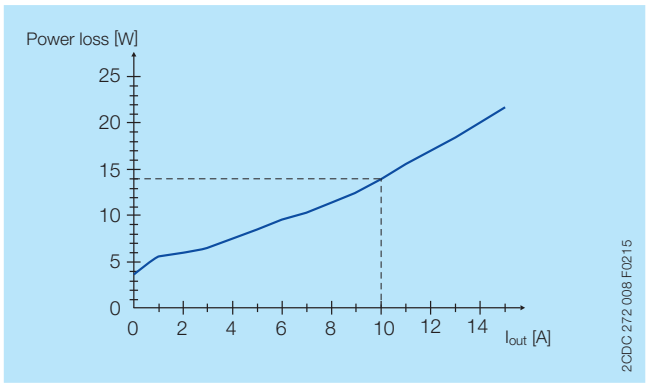

Typical power loss over output current

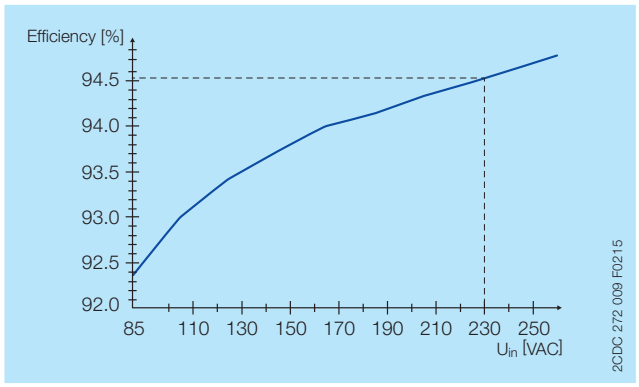

Typical efficiency over AC input voltage

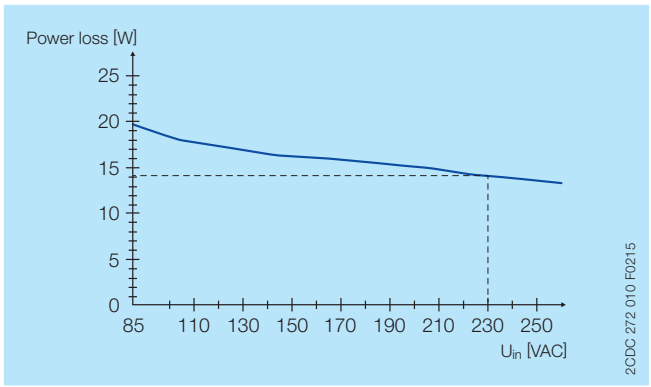

Typical power loss over AC input voltage

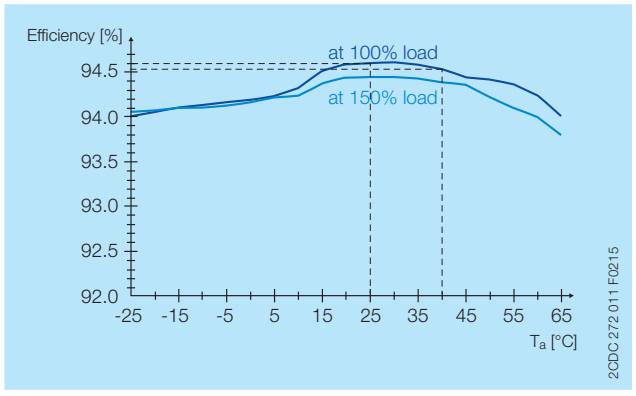

Typical efficiency over ambient temperature

Characteristic curve of output

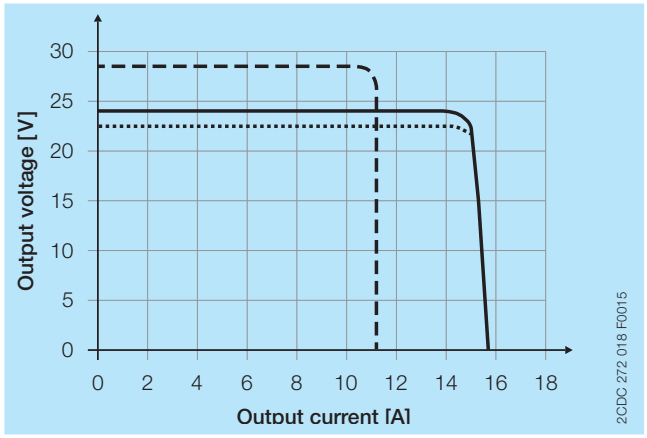

Characteristic curve of output at T_a = 25 °C

Characteristic curve of temperature

CP-C.1 24/10.0

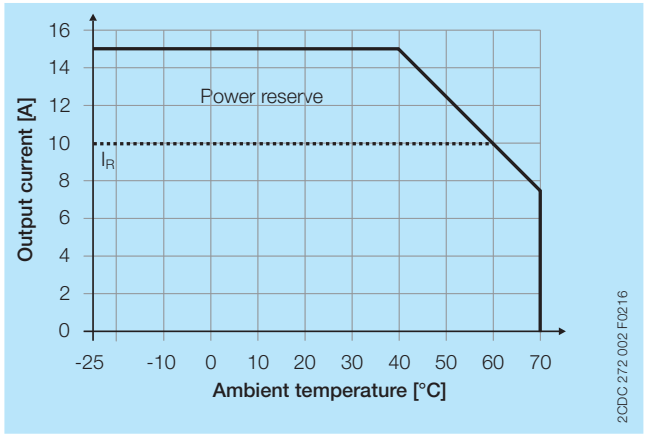

CP-C.1 24/10.0-C

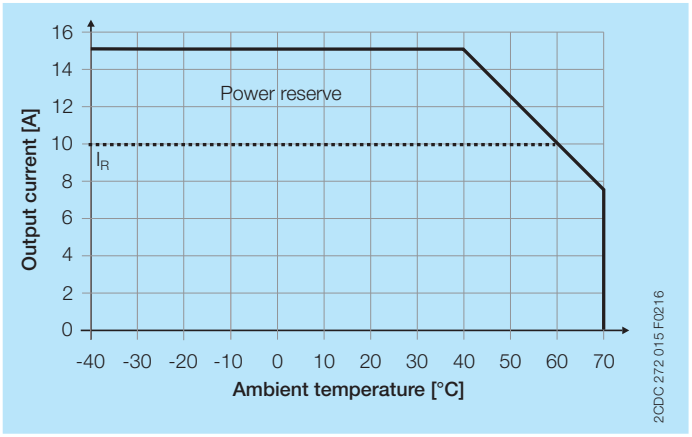

Characteristic curves of temperature at U_{out} = 24 V, mounting position 1

The switch mode power supply CP-C.1 is able to supply at 24 V DC output voltage and at an ambient temperature of
- ≤ 40 °C a continuous output current of typ. ≤ 15 A
- ≤ 60 °C the rated current of 10 A

With mounting position 1 and at ambient temperatures of > +60 °C the output power has to be reduced by 2.5 % per Celcius degree temperature increase. Deratings for other mounting positions on request.

At thermal overload the device will switch-off as soon as the internal temperature exceeds the acceptable level. The exact ambient temperature threshold depends on the mounting position and load of the power supply.

If the switch mode power supply is loaded with an output current > 15 A, the operating point is passing through the U/I characteristic curve shown.

The device is equipped with an overtemperature protection function. It will switch-off as soon as the internal overtemperature protection function is activated.

Dimensions

in **mm** and inch

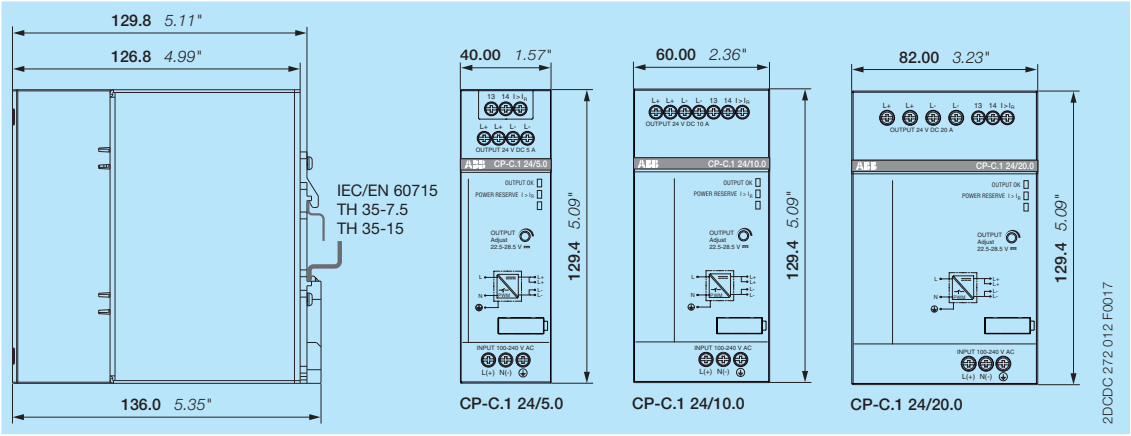

Further documentation

Document title	Document type	Document number
Electronic relays and controls	Catalog	2CDC 110 004 C02xx
Operating and installation instructions CP-C.1	Instruction manual	1SVC 360 560 M0000
Additional information and notes on safety (ATEX)	Instruction manual	1SVC 360 560 M9000

You can find the documentation on the internet at **www.abb.com/lowvoltage**
-> Automation, Control and Protection -> Power supplies.

CAD system files

You can find the CAD files for CAD systems at
http://abb-control-products.partcommunity.com
-> Low Voltage Products & Systems -> Control Products -> Electronic Relays and Controls.

Contact us

ABB STOTZ-KONTAKT GmbH
P. O. Box 10 16 80
69006 Heidelberg, Germany
Phone: +49 (0) 6221 7 01-0
Fax: +49 (0) 6221 7 01-13 25
E-mail: info.desto@de.abb.com

You can find the address of your
local sales organisation on the
ABB home page
http://www.abb.com/contacts
-> Low Voltage Products and Systems

Document number 2CDC 114 100 D0201 Rev. C (07.2018)

Note:
We reserve the right to make technical changes or modify the contents of this document without prior notice. With regard to purchase orders, the agreed particulars shall prevail. ABB AG does not accept any responsibility whatsoever for potential errors or possible lack of information in this document.

We reserve all rights in this document and in the subject matter and illustrations contained therein. Any reproduction, disclosure to third parties or utilization of its contents – in whole or in parts – is forbidden without prior written consent of ABB AG.

Copyright© 2018 ABB
All rights reserved