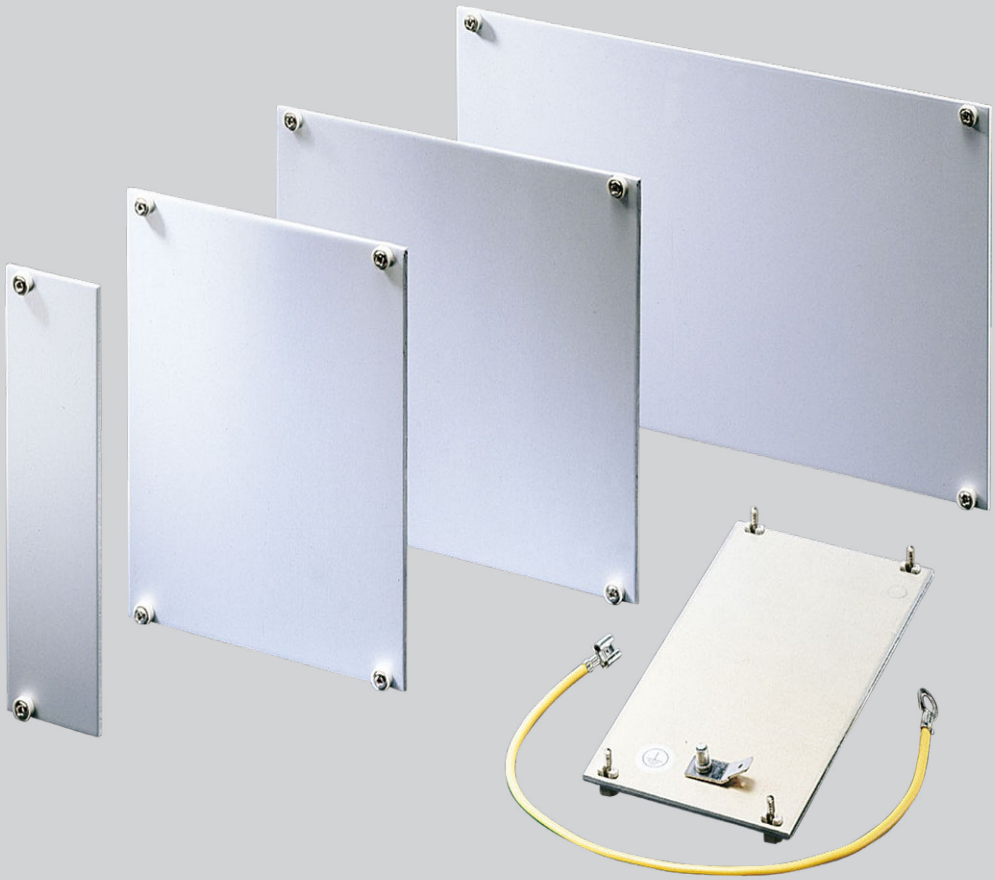

CONNECT AND PROTECT

Front Panels

nVent
SCHROFF

Modules – Front panels

OVERVIEW

MAIN CATALOG

Cabinets 1

Wall mounted cases 2

Accessories for cabinets and wall mounted cases . . 3

Climate control . . 4

Electronics cases 5

Subracks/ 19" chassis 6

Front panels, plug-in units 7

Systems 8

Power supply units 9

Backplanes 10

Connectors, front panel component system 11

Appendix 12



04292001

STANDARDS

- IEC 60297-3-101/IEEE 1101.1/10

SERVICEPLUS

e.g. individual colouring
e.g. customised cut-outs
e.g. printing
e.g. mounting service
e.g. special dimensions



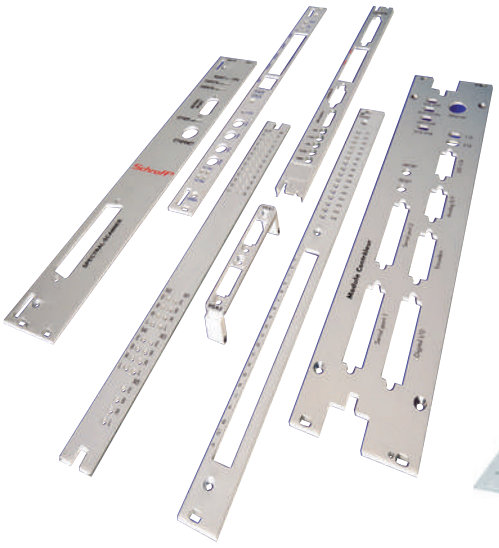

32304003

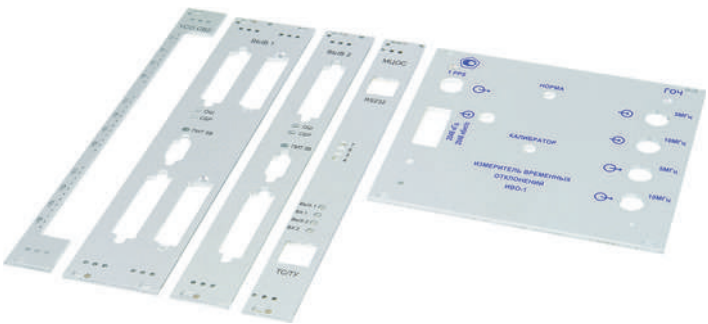

04210001 04603009

Modules – Front panels

OVERVIEW

FRONT PANELS FOR FITTING IN SUBRACKS, CASES AND SYSTEMS

- Extensive standard range with various finishes and materials (aluminium or stainless steel)
- Front Panel Express:
  Fast delivery service of customised versions (from 2 days)
- EMC shielding retrofittable



04292001

FRONT PANELS, UNSHIELDED

- Aluminium, clear anodised
- Aluminium, clear pre-anodised, cut edge untreated
- Aluminium, front anodised, rear passivated (conductive)
- Other finishes on request



04600006

FRONT PANELS SHIELDABLE, FLAT

- With lateral grooves to fit EMC gaskets (stainless steel)
- Compatible with the shielded U profile version



04602004

FRONT PANELS, SHIELDABLE, U PROFILE

- With lateral groove to fix a textile self-adhesive EMC gasket
- Compatible with the shielded flat version
- High robustness through U profile



04295001 04295002

FURTHER FRONT PANELS

- Hinged/folding front panels
- Front panels with GND/earthing
- Mezzanine front panels
- AdvancedTCA front panels
- MicroTCA front panels
- AdvancedMC front panels

Overview **7.2**

Front panels
Unshielded **7.4**
Shieldable **7.5**
EMC stainless steel gaskets **7.6**
Assembly tool **7.6**

Front panels
Shieldable (U profile) **7.7**
EMC textile gasket . **7.6**

Further front panels
Hinged **7.8**
Hinged, shielded . . . **7.9**
For D-Sub connectors **7.10**
For Coax connectors **7.11**
3 U with GND/ earthing **7.11**
Mezzanine front panels 7.12

Assembly kit 7.107
AdvancedTCA front panels 8.12
MicroTCA front panels 8.65
AdvancedMC front panels 8.60

Modules – Front panels

FRONT PANELS, UNSHIELDED

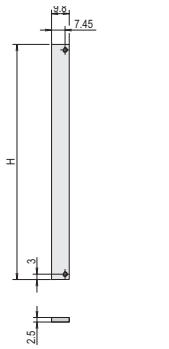

04602084

2 HP

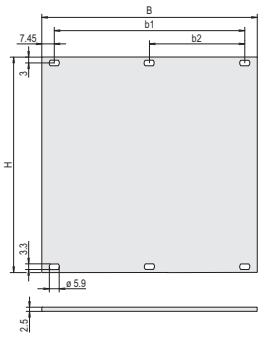

04602051

> 2 HP

- Front panel, Al, 2.5 mm
- Versions:
  - Al, anodised
  - Al, anodised, cut edges plain
  - Al, front anodised, rear passivated (conductive)

NOTE

- Other sizes and finishes available on request
- Please order fixing material separately, see chapter Assemply parts, page 7.107

ORDER INFORMATION

Height	H	Width	B	b1	b2	Qty 1).	Anodised, cut edges plain	Anodised	Front anodised, rear passivated (conductive)
U	mm	HP	mm	mm	mm		Part No.	Part No.	Part No.
1	39.5	84	426.4	411.5	203.2	1	–	–	**20850-426**
2	84.0	28	141.9	127.0	–	1 piece (SPQ 5)[1)]	–	–	**30847-458**
2	84.0	42	213.0	198.1	101.6	1	–	–	**30847-459**
2	84.0	63	319.7	304.8	157.5	1	–	–	**30847-460**
2	84.0	84	426.4	411.5	203.2	1	**30818-271**	**30807-416**	**30847-461**
3	128.4	2	9.8	–	–	1 piece (SPQ 5)[1)]	**30810-433**	**30810-432**	**30847-470**
3	128.4	3	14.9	–	–	1 piece (SPQ 5)[1)]	**30818-272**	**30807-508**	**30847-471**
3	128.4	4	20.0	–	–	1 piece (SPQ 5)[1)]	**30818-273**	**30807-481**	**30838-043**
3	128.4	5	25.0	–	–	1 piece (SPQ 5)[1)]	**30818-274**	**30807-510**	**30838-044**
3	128.4	6	30.1	–	–	1 piece (SPQ 5)[1)]	**30818-275**	**30807-482**	**30838-045**
3	128.4	7	35.2	–	–	1 piece (SPQ 5)[1)]	**30818-276**	**30807-509**	**30838-046**
3	128.4	8	40.3	25.4 [2)]	–	1 piece (SPQ 5)[1)]	**30818-277**	**30807-484**	**30838-047**
3	128.4	10	50.5	35.6	–	1 piece (SPQ 5)[1)]	**30818-279**	**30807-483**	**30838-049**
3	128.4	12	60.6	45.7	–	1 piece (SPQ 5)[1)]	**30818-281**	**30807-485**	**30838-051**
3	128.4	14	70.8	55.9	–	1 piece (SPQ 5)[1)]	**30818-282**	**30807-501**	**30838-053**
3	128.4	21	106.3	91.4	–	1 piece (SPQ 5)[1)]	**30818-289**	**30807-487**	**30838-060**
3	128.4	28	141.9	127.0	–	1 piece (SPQ 5)[1)]	**30818-296**	**30807-496**	**30838-067**
3	128.4	42	213.0	198.1	101.6 [2)]	1	**30818-310**	**30807-494**	**30838-081**
3	128.4	63	319.7	304.8	157.5	1	**30818-331**	**30808-067**	**30838-102**
3	128.4	84	426.4	411.5	203.2	1	**30818-352**	**30807-506**	**30838-123**
4	128.4	28	141.9	127.0	–	1 piece (SPQ 5)[1)]	–	–	**30847-462**
4	128.4	42	213.0	198.1	101.6 [2)]	1	–	–	**30847-463**
4	128.4	63	319.7	304.8	157.5	1	–	–	**30847-464**
4	172.9	84	426.4	411.5	203.2	1	**30818-434**	**30807-596**	**30847-465**
5	128.4	28	141.9	127.0	–	1 piece (SPQ 5)[1)]	–	–	**30847-466**
5	128.4	42	213.0	198.1	101.6 [2)]	1	–	–	**30847-467**
5	128.4	63	319.7	304.8	157.5	1	–	–	**30847-468**
5	172.9	84	426.4	411.5	203.2	1	**30818-434**	**30807-596**	**30847-469**
6	261.8	2	9.8	–	–	1 piece (SPQ 5)[1)]	**30818-747**	**30818-741**	**30847-472**
6	261.8	4	20.0	–	–	1 piece (SPQ 5)[1)]	**30818-518**	**30807-778**	**30838-124**
6	261.8	5	25.0	–	–	1 piece (SPQ 5)[1)]	**30818-519**	**30807-777**	**30838-125**
6	261.8	6	30.1	–	–	1 piece (SPQ 5)[1)]	**30818-520**	**30807-752**	**30838-126**
6	261.8	7	35.2	–	–	1 piece (SPQ 5)[1)]	**30818-521**	–	**30838-127**
6	261.8	8	40.3	25.4 [2)]	–	1 piece (SPQ 5)[1)]	**30818-522**	**30807-779**	**30838-128**
6	261.8	10	50.5	35.6	–	1 piece (SPQ 5)[1)]	**30818-524**	**30807-753**	**30838-130**
6	261.8	12	60.6	45.7	–	1 piece (SPQ 5)[1)]	**30818-526**	**30807-755**	**30838-132**
6	261.8	14	70.8	55.9	–	1 piece (SPQ 5)[1)]	**30818-528**	**30807-758**	**30838-134**
6	261.8	16	80.9	66.0	–	1 piece (SPQ 5)[1)]	**30818-530**	**30807-780**	**30838-136**
6	261.8	21	106.3	91.4	–	1 piece (SPQ 5)[1)]	**30818-535**	**30807-757**	**30838-141**
6	261.8	28	141.9	127.0	–	1 piece (SPQ 5)[1)]	**30818-542**	**30807-766**	**30838-148**
6	261.8	42	213.0	198.1	101.6 [2)]	1	**30818-556**	**30807-764**	**30838-162**
6	261.8	63	319.7	304.8	157.5	1	**30818-577**	**30807-771**	**30838-183**
6	261.8	84	426.4	411.5	203.2	1	**30818-598**	**30807-776**	**30838-204**
9	395.1	84	426.4	411.5	203.2	1	–	–	**30847-556**

1) SPQ (standard pack quantity): Order number includes 1 piece, but delivery is exclusively made in standard pack quantity (SPQ); please order at least the SPQ quantity or a multiple thereof

2) This dimension is only available for "front anodised, rear iridescent green chromated" version

- Please order fixing material (sleeves, collar screws) separately, see page 7.107

Modules – Front panels

FRONT PANELS, SHIELDABLE

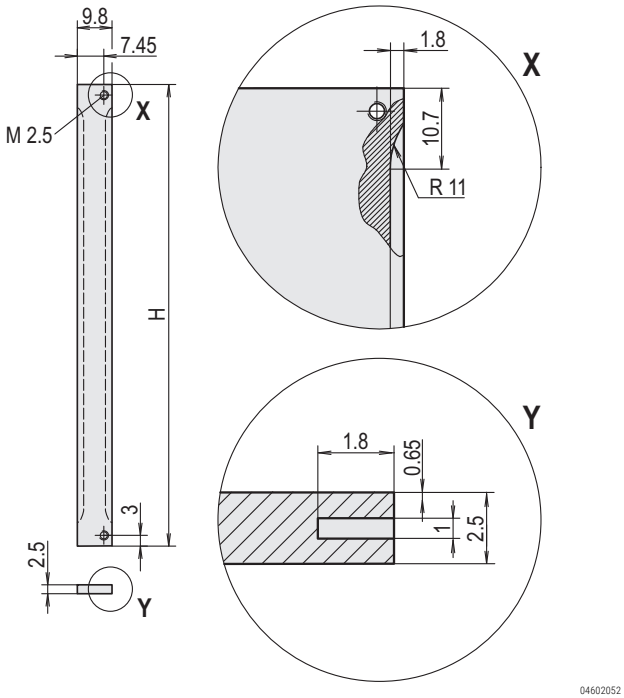

2 HP

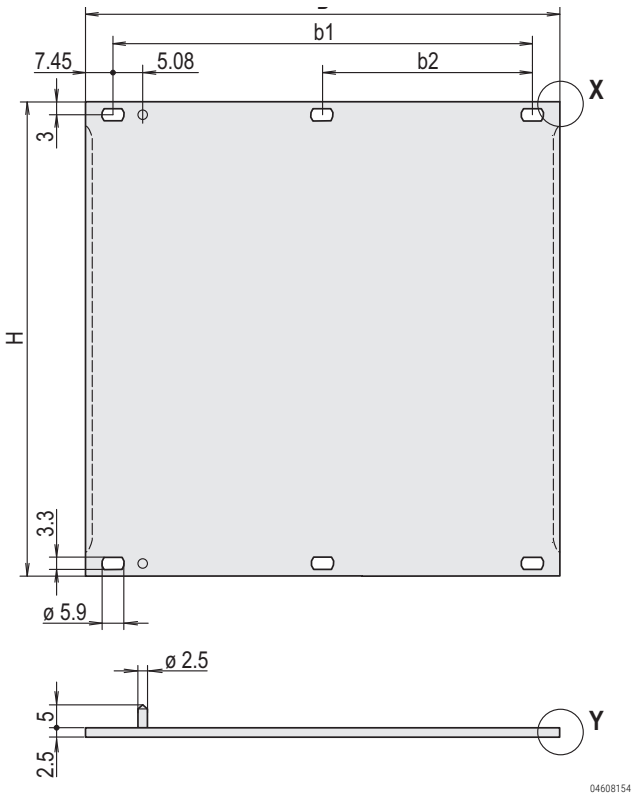

> 2 HP

- Front panel, Al, 2.5 mm, front anodised, rear passivated (conductive), 2 alignment pins pressed-in, stainless steel
- Shielding with stainless steel EMC gasket

ORDER INFORMATION

Height H U	mm	Width HP	B mm	b1 mm	b2 mm	Align-ment pin	Qty	Part no.
2	84	84	426.4	411.5	203.2	–	1	**30846-588**
3	128.4	2	9.8	–	–	–	1 (SPQ 5)[1)]	**30846-864**
3	128.4	3	14.9	–	–	x	1 (SPQ 5)[1)]	**20846-425**
3	128.4	4	20	–	–	x	1 (SPQ 5)[1)]	**20846-426**
3	128.4	5	25	–	–	x	1 (SPQ 5)[1)]	**20846-427**
3	128.4	6	30.1	–	–	x	1 (SPQ 5)[1)]	**20846-428**
3	128.4	7	35.2	–	–	x	1 (SPQ 5)[1)]	**20846-429**
3	128.4	8	40.3	25.4	–	x	1 (SPQ 5)[1)]	**20846-430**
3	128.4	10	50.5	35.6	–	x	1 (SPQ 5)[1)]	**20846-431**
3	128.4	12	60.6	45.7	–	x	1 (SPQ 5)[1)]	**20846-432**
3	128.4	14	70.8	55.9	–	x	1 (SPQ 5)[1)]	**20846-433**
3	128.4	21	106.3	91.4	–	x	1 (SPQ 5)[1)]	**20846-434**
3	128.4	28	141.9	127	–	x	1 (SPQ 5)[1)]	**20846-436**
3	128.4	42	213	198.1	101.6	x	1	**20846-437**
3	128.4	63	319.7	304.8	157.5	x	1	**20846-438**
3	128.4	84	426.4	411.5	203.2	–	1	**30846-676**
4	172.9	84	426.4	411.5	203.2	–	1	**30846-683**
6	261.8	2	9.8	–	–	–	1 (SPQ 5)[1)]	**30846-865**
6	261.8	4	20	–	–	x	1 (SPQ 5)[1)]	**20846-443**
6	261.8	5	25	–	–	x	1 (SPQ 5)[1)]	**20846-444**
6	261.8	6	30.1	–	–	x	1 (SPQ 5)[1)]	**20846-445**
6	261.8	7	35.2	–	–	x	1 (SPQ 5)[1)]	**20846-446**
6	261.8	8	40.3	25.4	–	x	1 (SPQ 5)[1)]	**20846-447**
6	261.8	10	50.5	35.6	–	x	1 (SPQ 5)[1)]	**20846-448**
6	261.8	12	60.6	45.7	–	x	1 (SPQ 5)[1)]	**20846-449**
6	261.8	14	70.8	55.9	–	x	1 (SPQ 5)[1)]	**20846-450**
6	261.8	16	80.9	66	–	x	1 (SPQ 5)[1)]	**20846-456**
6	261.8	21	106.3	91.4	–	x	1 (SPQ 5)[1)]	**20846-451**
6	261.8	28	141.9	127	–	x	1 (SPQ 5)[1)]	**20846-452**
6	261.8	42	213	198.1	101.6	x	1	**20846-453**
6	261.8	63	319.7	304.8	157.5	x	1	**20846-454**
6	261.8	84	426.4	411.5	203.2	–	1	**30846-771**
9	395.1	84	426.4	411.5	203.2	–	1	**30846-859**

Delivery is exclusively made in Standard Pack Quantity (SPQ): Please order at least 5 pieces or a multiple.
Pricing is per individual item.

NOTE

- Please order fixing material (sleeves, collar screws) separately, see page 7.107
- Please order stainless steel EMC gasket separately, see page 7.6

Part number in bold face type: ready for despatch within 2 working days
Part number in normal type: ready for despatch within 10 working days

Modules – Front panels

STAINLESS STEEL EMC GASKET

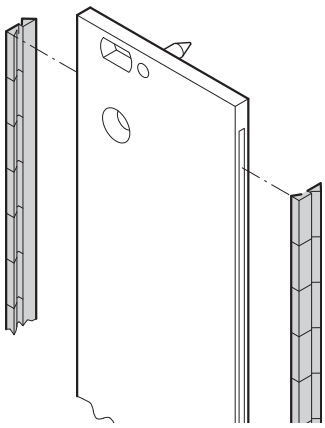

bga45760

Montagewerkzeug

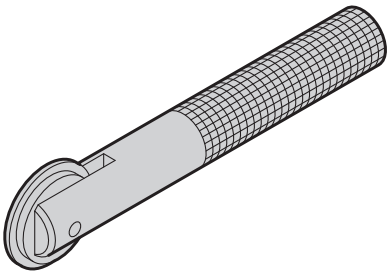

aza45937

- The stainless steel EMC gaskets are inserted into the lateral slots of the shieldable front panels (2 pieces per front panel)

DELIVERY COMPRISES

Item	Qty	Description
1	10/100	EMC gasket (stainless steel)

ORDER INFORMATION

Height U	Height mm	Qty/PU	Part no.
2	52	10	**21101-775**
3	97	10	**21101-705**
3	97	100	**21101-706**
4	142	10	**21101-713**
4	142	100	**21101-714**
5	187	10	21101-777
5	187	100	21101-778
6	232	10	**21101-707**
6	232	100	**21101-708**
9	367	10	**21101-709**
9	367	100	**21101-710**
Assembly tool for EMC gasket (stainless steel), 1 piece			**24560-270**

NOTE

- Please order assembly tool separately

TEXTILE EMC GASKET

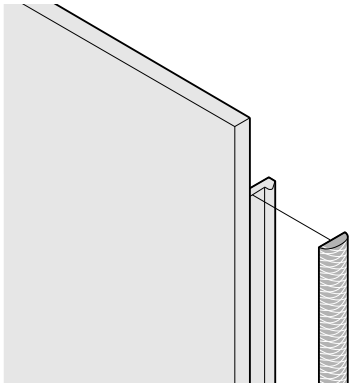

04602054

EMC characteristic (typical, green)
B1 (red): -40 ... -70 °C, B2 (blue): -40 ... -85 °C

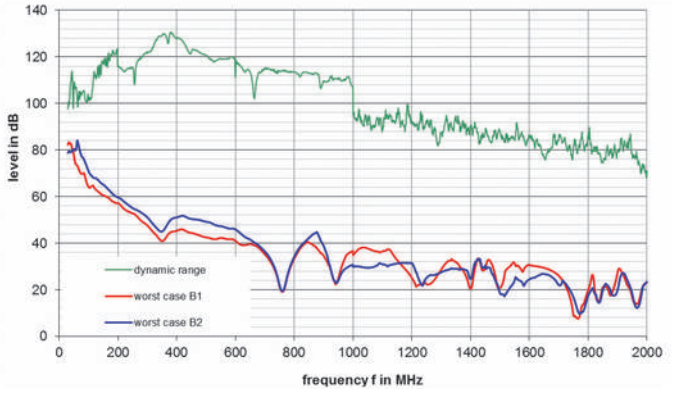

04614052

- Textile EMC gasket is glued laterally on the front panel, in the groove of the right-hand profile
- 2 temperature ranges
  - Temperature range -40... +70 °C
  - Temperature range -40... +85 °C

DELIVERY INCLUDES

Item	Qty	Description
1	see Order Information	EMC textile gasket, core: TPE foam (-40... +70 °C), Core: silicon with hollow chamber (-40... +85 °C), sleeve: textile cladding with CuNi coating

ORDER INFORMATION

Height U	Height mm	Qty/PU piece	Part no. Temperature range -40... +70 °C	Part no. Temperature range -40... +85 °C
2	52	10	**21101-857**	**21102-857**
3	97	10	**21101-853**	**21102-853**
3	97	100	**21101-854**	**21102-854**
4	142	10	**21101-858**	**21102-858**
5	187	10	**21101-978**	**21102-978**
6	232	10	**21101-855**	**21102-855**
6	232	100	**21101-856**	**21102-856**
9	365	10	**21101-859**	**21102-859**
9	365	100	**21101-904**	**–**

Modules – Front panels

FRONT PANELS, U PROFILE, SHIELDABLE

2 HP

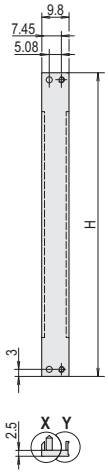

3 U

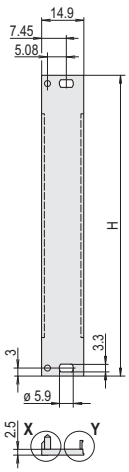

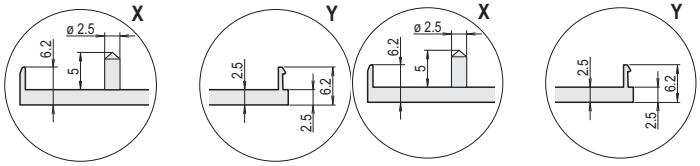

04608155 04608158

> 3 HP

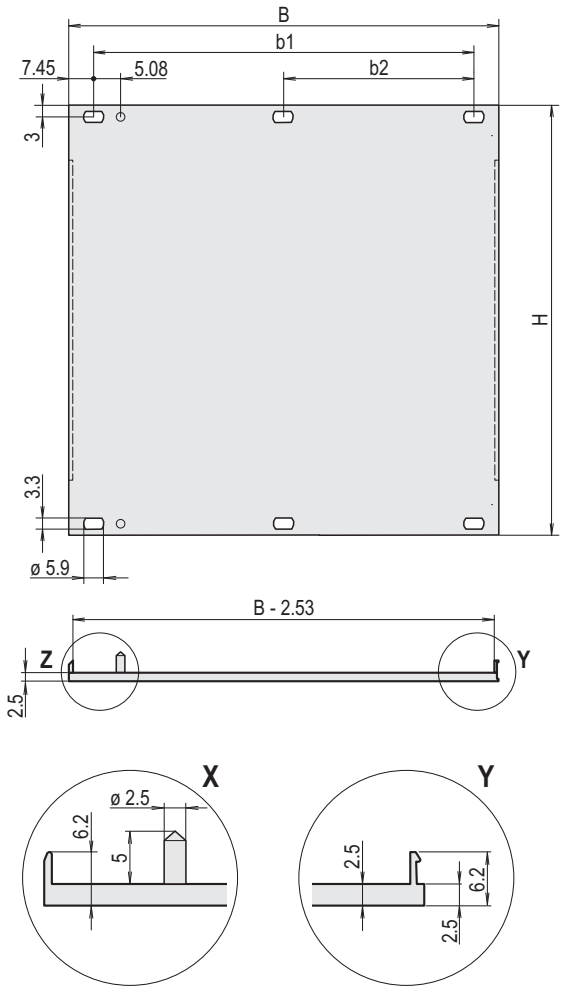

04608156

- High stability through U profile
- Front panel, U profile, Al, front anodised, rear conductive, 2 alignment pins pressed-in, stainless steel
- Differerences in the finish between 2 ... 12 HP and 14 ... 84 HP

ORDER INFORMATION

Height H U	mm	Width HP	B mm	b1 mm	b2 mm	Align-ment pin	Qty	Part No.
2	84	28	141.9	127	–	x	1 piece (SPQ 5)[1]	**20848-206**
2	84	42	213	198.1	101.6	x	1	**20848-260**
2	84	63	319.7	304.8	157.5	x	1	**20848-261**
2	84	84	426.4	411.5	203.2	–	1	**20848-262**
3	128.4	2	9.8	–	–	x	1 piece (SPQ 5)[1]	**30849-001**
3	128.4	3	14.9	–	–	x	1 piece (SPQ 5)[1]	**30849-004**
3	128.4	4	20	–	–	x	1 piece (SPQ 5)[1]	**30848-354**
3	128.4	5	25	–	–	x	1 piece (SPQ 5)[1]	**30848-378**
3	128.4	6	30.1	–	–	x	1 piece (SPQ 5)[1]	**30848-380**
3	128.4	7	35.2	–	–	x	1 piece (SPQ 5)[1]	**30848-382**
3	128.4	8	40.3	25.4	–	x	1 piece (SPQ 5)[1]	**30848-356**
3	128.4	9	45.4	30.5	–	x	1 piece (SPQ 5)[1]	**30848-384**
3	128.4	10	50.5	35.6	–	x	1 piece (SPQ 5)[1]	**30848-386**
3	128.4	12	60.6	45.7	–	x	1 piece (SPQ 5)[1]	**30848-358**
3	128.4	14	70.8	55.9	–	x	1 piece (SPQ 5)[1]	**20848-013**
3	128.4	16	80.9	66	–	x	1 piece (SPQ 5)[1]	**20848-015**
3	128.4	21	106.3	91.4	–	x	1 piece (SPQ 5)[1]	**20848-020**
3	128.4	28	141.9	127	–	x	1 piece (SPQ 5)[1]	**20848-027**
3	128.4	42	213	198.1	101.6	x	1	**20848-047**
3	128.4	63	319.7	304.8	157.5	x	1	**20848-068**
3	128.4	84	426.4	411.5	203.2	–	1	**20848-097**
4	172.9	28	141.9	127	–	x	1 piece (SPQ 5)[1]	**20848-268**
4	172.9	42	213	198.1	101.6	x	1	**20848-269**
4	172.9	63	319.7	304.8	157.5	x	1	**20848-270**
4	172.9	84	426.4	411.5	203.2	–	1	**20848-271**
5	217.4	28	141.9	127	–	x	1 piece (SPQ 5)[1]	**20848-647**
5	217.4	42	213	198.1	101.6	x	1	**20848-648**
5	217.4	63	319.7	304.8	157.5	x	1	**20848-649**
5	217.4	84	426.4	411.5	203.2	–	1	**20848-650**
6	261.8	2	9.8	–	–	x	1 piece (SPQ 5)[1]	**30849-002**
6	261.8	4	20	–	–	x	1 piece (SPQ 5)[1]	**30848-355**
6	261.8	5	25	–	–	x	1 piece (SPQ 5)[1]	**30848-379**
6	261.8	6	30.1	–	–	x	1 piece (SPQ 5)[1]	**30848-381**
6	261.8	7	35.2	–	–	x	1 piece (SPQ 5)[1]	**30848-383**
6	261.8	8	40.3	25.4	–	x	1 piece (SPQ 5)[1]	**30848-357**
6	261.8	9	45.4	30.5	–	x	1 piece (SPQ 5)[1]	**30848-385**
6	261.8	10	50.5	35.6	–	x	1 piece (SPQ 5)[1]	**30848-387**
6	261.8	12	60.6	45.7	–	x	1 piece (SPQ 5)[1]	**30848-359**
6	261.8	14	70.8	55.9	–	x	1 piece (SPQ 5)[1]	**20848-106**
6	261.8	16	80.9	66	–	x	1 piece (SPQ 5)[1]	**20848-108**
6	261.8	21	106.3	91.4	–	x	1 piece (SPQ 5)[1]	**20848-113**
6	261.8	28	141.9	127	–	x	1 piece (SPQ 5)[1]	**20848-120**
6	261.8	42	213	198.1	101.6	x	1	**20848-139**
6	261.8	63	319.7	304.8	157.5	x	1	**20848-160**
6	261.8	84	426.4	411.5	208.3	–	1	**20848-189**
9	395.1	84	426.4	411.5	203.2	–	1	**20848-280**

1) Delivery is exclusively made in Standard Pack Quantity (SPQ): Please order at least 5 pieces or a multiple. Pricing is per individual item.

NOTE

- Differences in finish between 2 ... 12 HP and 14 ... 84 HP
- 2 ... 12 HP: one-part U-profile
- 14 ... 84 HP: multi-part U-profile (front panel with crimped profiles)
- Please order fixing material (sleeves, collar screws) separately, see page 7.107
- Please order textile EMC gasket separately, see page 7.6

Part number in bold face type: ready for despatch within 2 working days
Part number in normal type: ready for despatch within 10 working days

Modules – Front panels

FRONT PANELS, BOTTOM-HINGED

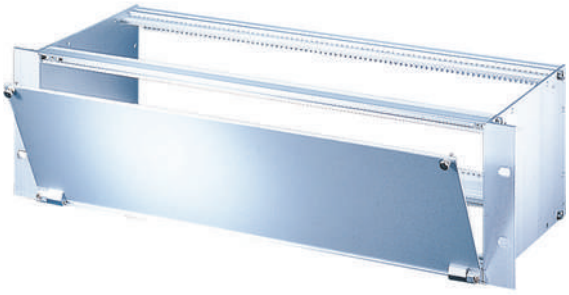

04295001

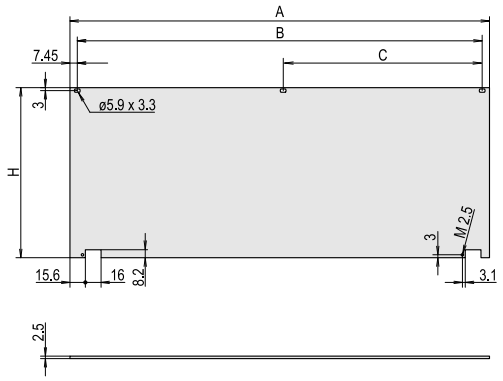

04602080

Unshielded

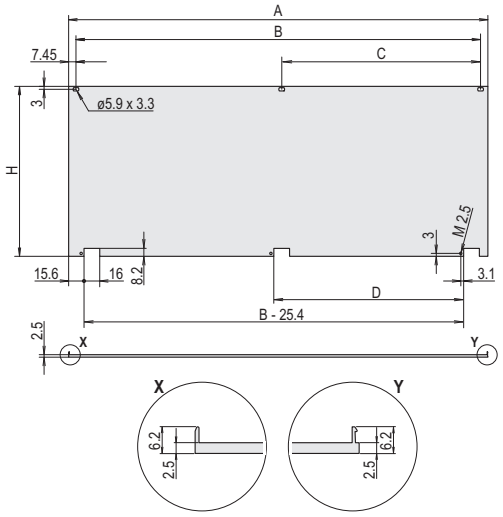

04602079

Shielded

- Suitable for subracks (europacPRO) and cases (ratiopacPRO, propacPRO, compacPRO)
- Front panel can be unhinged at 135° (not ratiopacPRO) opening angle
- The useable width is not restricted
- Mounts on the horizontal rails
- 2 versions:
  - unshielded
  - shielded, U front panel with textile EMC gasket

DELIVERY COMPRISES (kit)

Item	Qty		Description
	Unshielded	Shielded	
1	1	-	Front panel, hinged, Al, 2.5 mm, anodised, cut edges plain
1a	-	1	Front panel, U profile, hinged, Al, 2.5 mm, front anodised, rear passivated (conductive)
2	2	2 (28 HP) / 3	Hinge, Zn die-cast, nickel-plated
3	2 / 3 (84 HP)	2 (28 HP) / 3	Sleeve, PA
4	2 / 3 (84 HP)	2 (28 HP) / 3	Collar screw M2.5 x 12.3, nickel-plated
5	-	1	EMC textile gasket, core: foam, sleeve: textile cladding with CuNi coating
6	1	1	Assembly kit

ORDER INFORMATION

Dimensions			
Height U	Width HP	Unshielded Part no.	Shielded Part no.
3	28	**20838-280**	**20848-608**
3	42	**20838-271**	**20848-599**
3	63	**20838-272**	**20848-600**
3	84	**20838-273**	**20848-601**
4	42	**20838-277**	**20848-605**
4	63	**20838-278**	**20848-606**
4	84	**20838-279**	**20848-607**
6	28	**–**	**20848-696**
6	42	**20838-274**	**20848-602**
6	63	**20838-275**	**20848-603**
6	84	**20838-276**	**20848-604**

DIMENSIONS

Dimensions							Shielded
Height U	Width HP	A mm	B mm	C mm	D mm	H mm	Part no.
3	28	141.9	127.0	–	–	128.4	**20848-608**
3	42	213.0	198.1	101.6	86.4	128.4	**20848-599**
3	63	319.7	304.8	157.5	137.2	128.4	**20848-600**
3	84	426.4	411.5	203.2	193.0	128.4	**20848-601**
4	42	213.0	198.1	101.6	86.4	172.9	**20848-605**
4	63	319.7	304.8	157.5	137.2	172.9	**20848-606**
4	84	426.4	411.5	203.2	193.0	172.9	**20848-607**
6	28	141.9	127.0	–	–	261.8	**20848-696**
6	42	213.0	198.1	101.6	86.4	261.8	**20848-602**
6	63	319.7	304.8	157.5	137.2	261.8	**20848-603**
6	84	426.4	411.5	203.2	193.0	261.8	**20848-604**

Dimensions						Unshielded
Height U	Width HP	A mm	B mm	C mm	H mm	Part no.
3	28	141.9	127.0	–	128.4	**20838-280**
3	42	213.0	198.1	–	128.4	**20838-271**
3	63	319.7	304.8	–	128.4	**20838-272**
3	84	426.4	411.5	203.2	128.4	**20838-273**
4	42	213.0	198.1	–	172.9	**20838-277**
4	63	319.7	304.8	–	172.9	**20838-278**
4	84	426.4	411.5	–	172.9	**20838-279**
6	42	213.0	198.1	–	261.8	**20838-274**
6	63	319.7	304.8	–	261.8	**20838-275**
6	84	426.4	411.5	203.2	261.8	**20838-276**

Modules – Front panels

FRONT PANEL, HINGED, SHIELDED

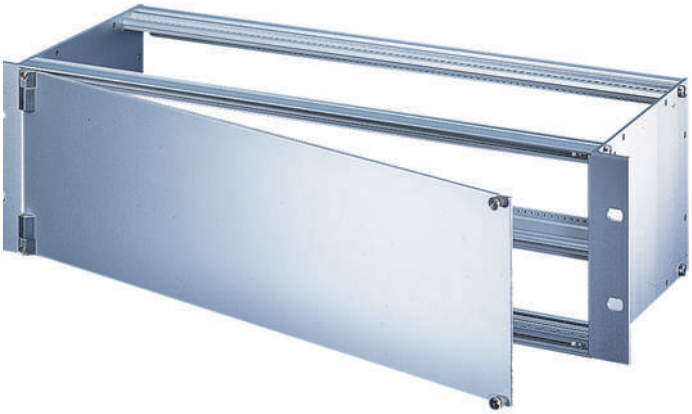

04295002

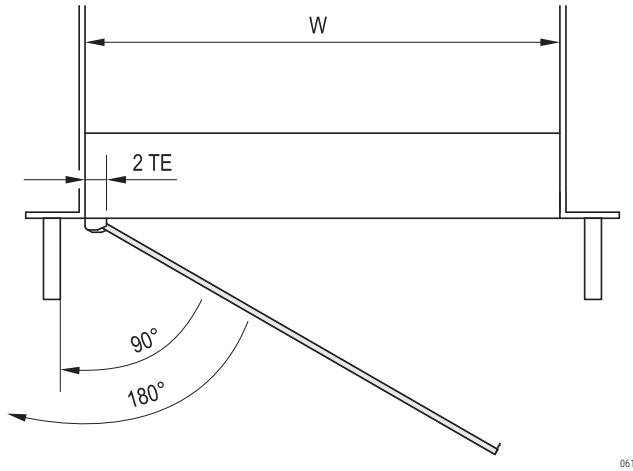

06106053

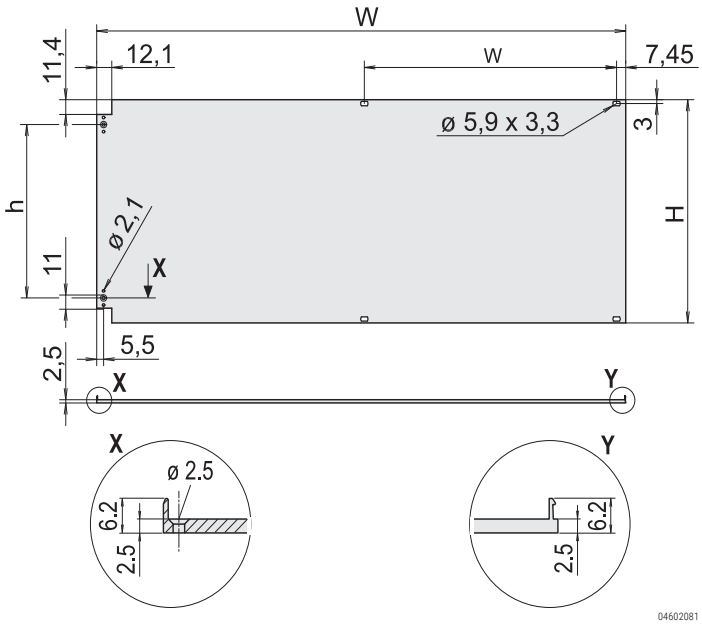

04602081

- Suitable for subracks (europacPRO) and cases (ratiopacPRO, propacPRO, compacPRO)
- Mounts on horizontal rails
- Front panel with textile EMC gasket
- Hinges can be fitted on left or right

DELIVERY COMPRISES (kit)

Item	Qty	Description
1	1	Front panel, hinged, Al, 2.5 mm, front anodised, rear passivated (conductive)
2	2	Hinge, Zn die-cast, chrome-plated
3	1	Textile EMC gasket, core: foam, sleeve: textile cladding with CuNi coating
4	1	Assembly kit

ORDER INFORMATION

Height U	H mm	h mm	W mm	w mm	Part no.
3	128.4	89.9	426.4	203.2	**20848-611**
6	261.8	223.2	426.4	203.2	**20848-617**

Part number in bold face type: ready for despatch within 2 working days
Part number in normal type: ready for despatch within 10 working days

Modules – Front panels

FRONT PANELS FOR D-SUB CONNECTORS

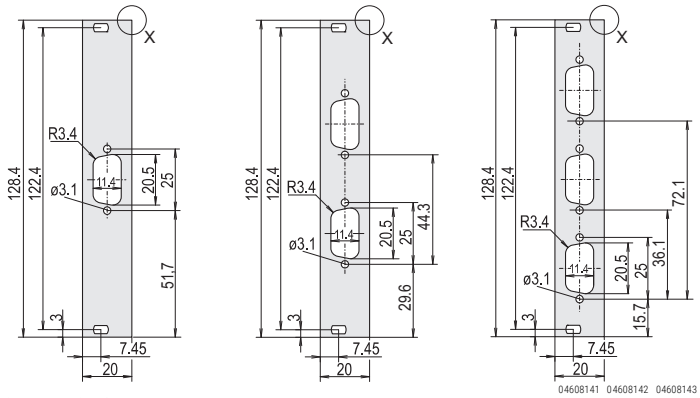

Cut-out 9-pin

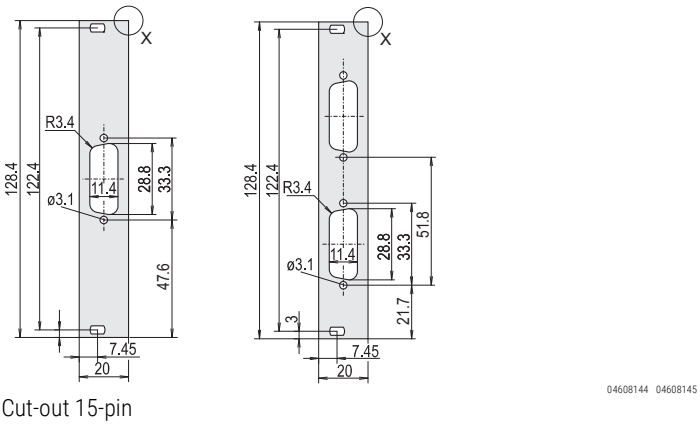

Cut-out 15-pin

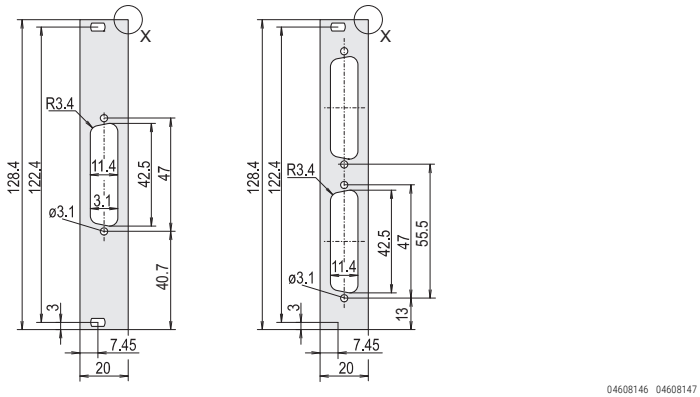

Cut-out 25-pin

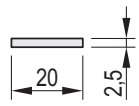

Unshielded

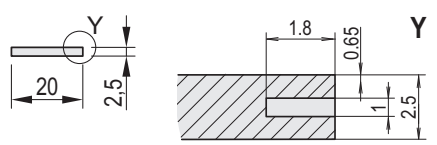

EMC gasket, stainless steel

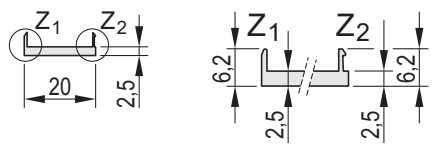

For textile EMC gasket

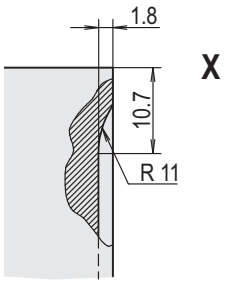

04608150 04608151 04608149 04608148 04808152 04808153

- 3 U/4 HP
- Aluminium, front anodised, rear ipassivated (conductive)
- Shielding through: stainless steel EMC or textile EMC gasket (please order separately)

DELIVERY COMPRISES

Item	Description
1a	Front panel, Al, 2.5 mm, front anodised, rear passivated (conductive)
1b	Front panel, Al, 2.5 mm, front anodised, rear passivated (conductive); for EMC stainless steel gasket
1c	Front panel, U profile, Al, 2.5 mm, front anodised, rear conductive; for EMC gasket (textile)

ORDER INFORMATION

Cut-out	Qty	Unshielded Part no. 1a	For EMC gasket Stainless steel Part no. 1b	Textile Part no. 1c
1 x 9-polig	1 piece (SPQ 5)	**30118-341**	**30118-348**	30849-749
2 x 9-polig	1 piece (SPQ 5)	**30118-344**	**30118-351**	30849-750
3 x 9-polig	1 piece (SPQ 5)	**30118-347**	30118-354	30849-751
1 x 15-polig	1 piece (SPQ 5)	**30118-342**	**30118-349**	30849-752
2 x 15-polig	1 piece (SPQ 5)	**30118-345**	30118-352	30849-753
1 x 25-polig	1 piece (SPQ 5)	**30118-343**	30118-350	30849-754
2 x 25-polig	1 piece (SPQ 5)	**30118-346**	30118-353	30849-755

Delivery is exclusively made in Standard Pack Quantity (SPQ): Please order at least 5 pieces or a multiple.
Pricing is per individual item.

NOTE

- Please order fixing material (sleeves, collar screws) separately, see page 7.107
- Please order stainless steel EMC gasket separately, see page 7.6
- Please order textile EMC gasket separately, see page 7.6

FRONT PANELS FOR COAX CONNECTORS

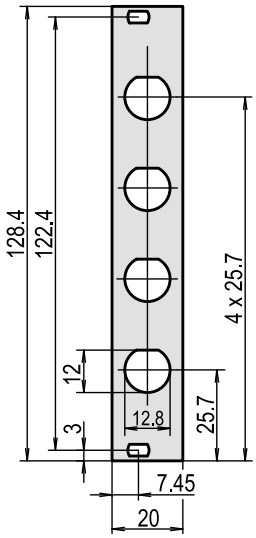

- 3 U/4 HP
- Aluminium, 2.5 mm, front anodised, rear passivated (conductive)

ORDER INFORMATION

Description	Qty/PU	Part no.
Cut-out 4 x Coax, unshielded	1	**30118-355**

NOTE

- Please order fixing material (sleeves, collar screws) separately, see page 7.107

FRONT PANELS 3 U WITH GND/EARTHING CONNECTION

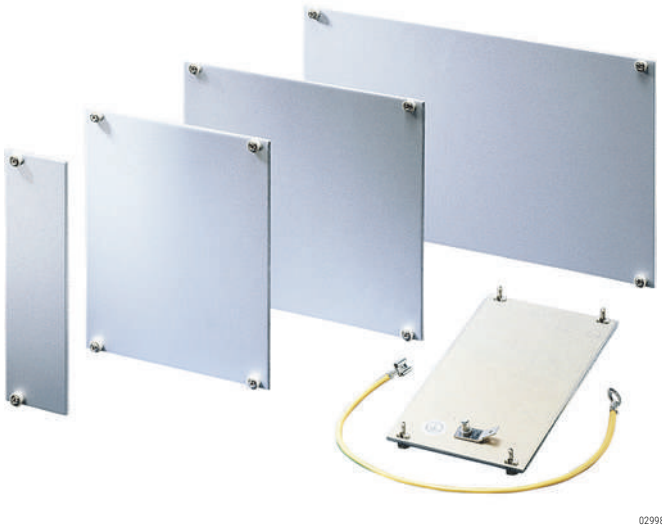

- Earthed front panel (protection class 1)

DELIVERY COMPRISES (items 1 – 3 assembled)

Item	Qty	Description
1	1	Front panel 3 U, Al, 2.5 mm, front anodised, rear ipassivated (conductive) with GND/earthing connection
2	4	Plastic sleeve, PA, grey
3	4	Collar screws, M2.5 x 11 and 12.3 Pozidrive, St, nickel-plated
4	1	GND/earthing kit, length of GND/earthing cable 320 mm

ORDER INFORMATION

Height U	Width HP	Qty	Part no.
3	7	1 piece (SPQ 5)	**20119-159**
3	14	1 piece (SPQ 5)	**20119-160**
3	21	1 piece (SPQ 5)	**20119-161**
3	28	1 piece (SPQ 5)	**20119-162**
3	42	1	**20119-163**

Delivery is exclusively made in Standard Pack Quantity (SPQ): Please order at least 5 pieces or a multiple.
Pricing is per individual item.

NOTE

- Please order fixing material (sleeves, collar screws) separately, see page 7.107

Part number in bold face type: ready for despatch within 2 working days
Part number in normal type: ready for despatch within 10 working days

North America

Warwick, RI, USA
Tel +1.401.738.1722
San Diego, CA, USA
Tel +1.858.740.2400

Europe, Middle East & India

Straubenhardt, Germany
Tel +49 7082 794 0
Betschdorf, France
Tel +33 3 88 90 64 90
Warsaw, Poland
Tel +48 22 209 98 35
Hemel Hempstead, Great Britain
Tel +44 1442 24 04 71
Lainate, Italy
Tel +39 02 932 714 1
Dubai, United Arab Emirates
Tel +971 4 82 38 666
Bangalore, India
Tel +91 80 6715 8900
Istanbul, Turkey
Tel +90 541 368 0941

Asia Pacific

Shanghai, China
Tel +86 21 2412 6943
Singapore
Tel +65 6768 5800
Shin-Yokohama, Japan
Tel +81 45 476 0271

Our powerful portfolio of brands:

CADDY ERICO HOFFMAN RAYCHEM SCHROFF TRACER

nVent

nVent.com/SCHROFF

©2018 nVent. All nVent marks and logos are owned or licensed by nVent Services GmbH or its affiliates. All other trademarks are the property of their respective owners.
nVent reserves the right to change specifications without notice.