

SECTION A-A

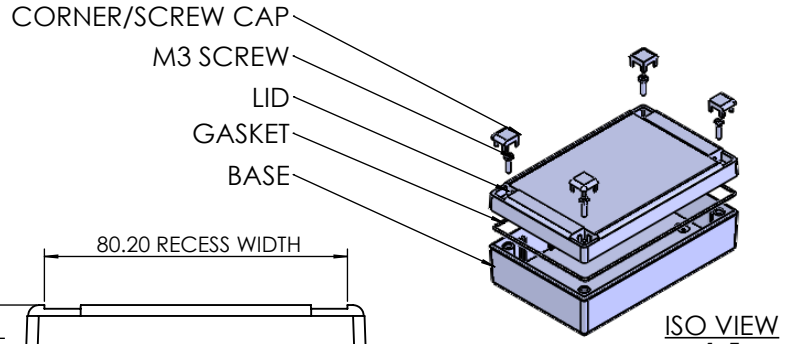

ISO VIEW
1:5

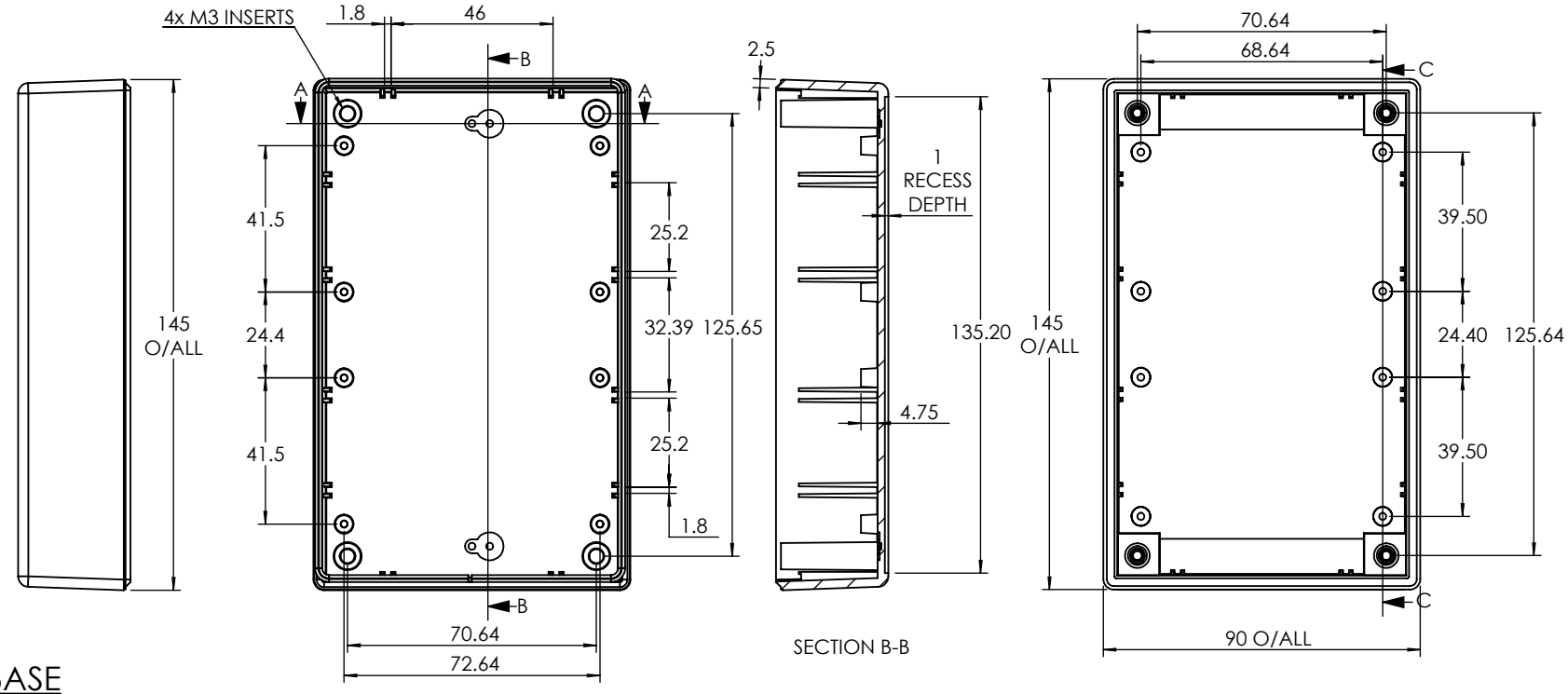

BASE

SECTION B-B

SECTION C-C

LID

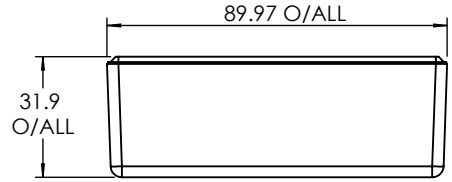

CAMDENBOSS
ELECTRONICS & ENCLOSURES
JAMES CARTER RD, MILDENHALL, SUFFOLK. IP28 7DE
TEL: 01638 716101 FAX: 01638 716554
EMAIL: Sales@CamdenBoss.com
WEB: www.CamdenBoss.com

	NAME	SIGNED	DATE
DRAWN	LEWIS LETCHFORD	L.L	15/04/2014
CHK'D	-	-	-

UNLESS OTHERWISE SPECIFIED:
DIMENSIONS ARE IN MILLIMETERS

GENERAL TOLERANCES +/- 0.2

FINISH. LIGHT SPARK

MATERIAL. UL - 94 HB ABS

PROJECTION.

DO NOT SCALE DRAWING

REVISION. O

TITLE: ASSEMBLY DRG FOR RECESS DESIGNER CASE SIZE 6 GREY

DWG NO. CRDCERG06

A4

SCALE. 1:2

SHEET 1 OF 1