Thermostatic mixing valve INSTAmix®

New

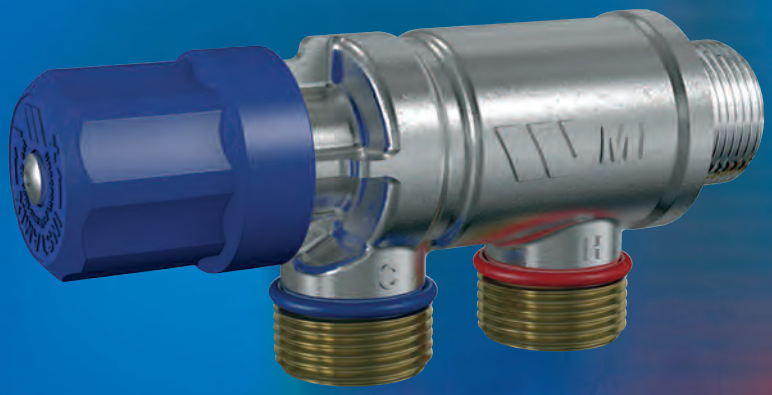

- Two parallel inlets (considered convenient for many system configurations).
- Temperature setting range : 30 to 60°C (temperature set secured by hexagonal socket screw).
- Fitted with 2 approved check valves (KIWA, WRC, DVGW, BELGAQUA, NF…).
- Outstanding reliability.

WATTS®
WATER TECHNOLOGIES

THERMOSTATIC MIXING VALVE INSTAmix®

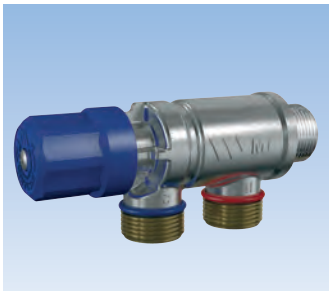

Application:

- Compact thermostatic mixing valve designed to supply general purpose applications with tempered water not exceeding a set temperature.
- Ideal for multi-facility applications : domestic homes, schools, restaurants, laboratories, motorway services, commercial buildings… anywhere needing a supply of water at a temperature pre-set on site.
- For 1 to 5 point of use (according flow capacity: Flow rate at 1 bar: 25 l/min, at 3 bar: 40 l/min).

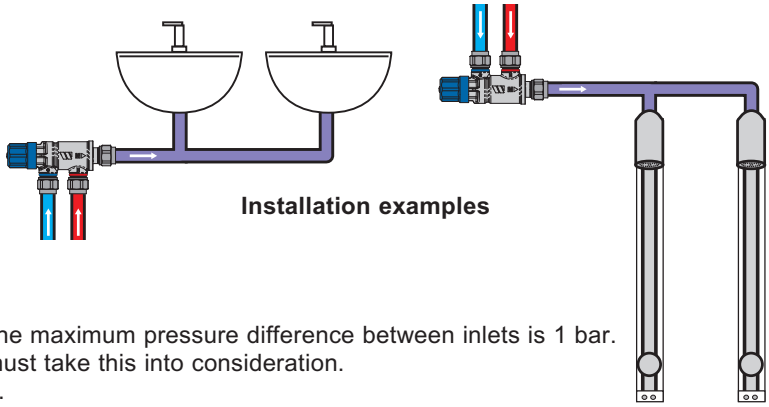

Installation examples

Features:

- Easily installed thermostatic mixing valve.
- Locking cap preventing the end user from adjusting the temperature.
- Fitted with 2 check valves.
- Can be installed in any position.
- Nickel plated finish (self colour brass on request).

Specifications:

- 1/2” or 3/4” Male.
- The pressure at the valve inlets must be balanced, the maximum pressure difference between inlets is 1 bar. The size and layout of pipework and in-line fittings must take this into consideration. Optimum performance achieved with equal pressure.
- Temperature: accurate to within 1,5°C of chosen temperature between 35 and 45°C (with balanced dynamic pressure).
- Head loss under dynamic pressure at the mixer inlets is shown by the curve.
- Maximum static pressure: 10 bar.
- Operating pressure: 0,2 to 5 bar.
- Hot temperature supply: 52* - 85°C, *differential minimum hot/mix temperature must be 10°C.
- Cold temperature supply: 5 - 20°C.
- Temperature setting range: 30 to 60°C.
- Factory temperature setting 38°C.
- Flow rate at 1 bar: 25 l/min, at 3 bar: 40 l/min.

References:

diameter	fitting	finish	setting range	art. no.
1/2”	M 1/2”	nickel plated	30/60°C	2297600
3/4”	M 3/4”	nickel plated	30/60°C	2297601

Materials:

Designation	material
Body	brass - CW617N
Finish	nickel plated (self colour brass on request)
Spring	stainless steel
Other brass parts	brass - CW 614N and CW602N

Designation	material
Piston	PSU (polysulfone polymer)
O-ring	EPDM
Check-valve	POM + stainless steel + rubber
Head/Handle	PA with glass fiber

Dimensions (in mm)

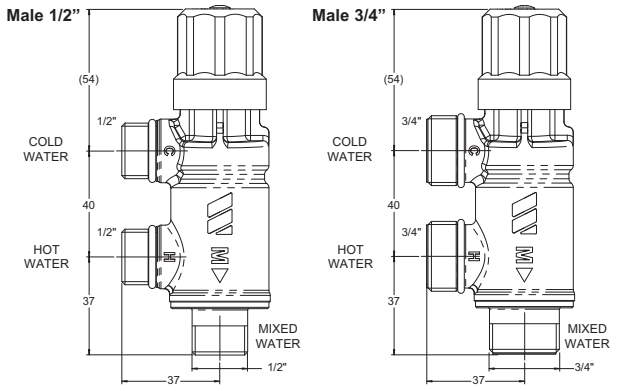

Pressure drop curve / headloss (identical for 1/2” and 3/4”)

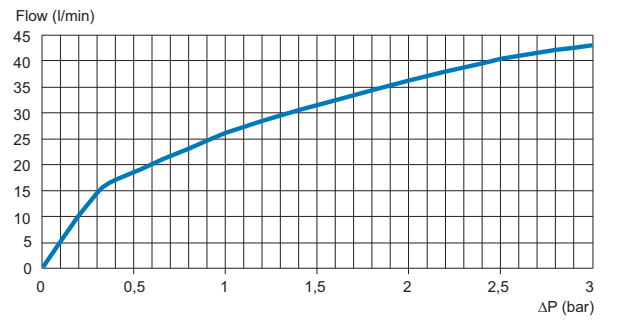

The photographs, illustrations and descriptions contained in this brochure are given for information only.
Watts Industries reserves the right to change the technical specifications or the design of these products without prior notice.

WATTS INDUSTRIES France
1590 avenue d'Orange CS 10101 SORGUES
84275 VEDENE cedex - FRANCE
Phone +33 (0)4 90 33 28 28 - Fax +33 (0)4 90 33 28 29/39
E-mail : info@wattsindustries.fr
www.wattsindustries.com

Re-order no. 69(52)-UK-15/03