Brand of NTN corporation

Technical data

EXP.208

Bearing units



Grey cast housing, radial insert ball bearing with eccentric locking collar, seal with slinger

KIT CONTENT

EX.208.G2, P208

VISUAL (S)

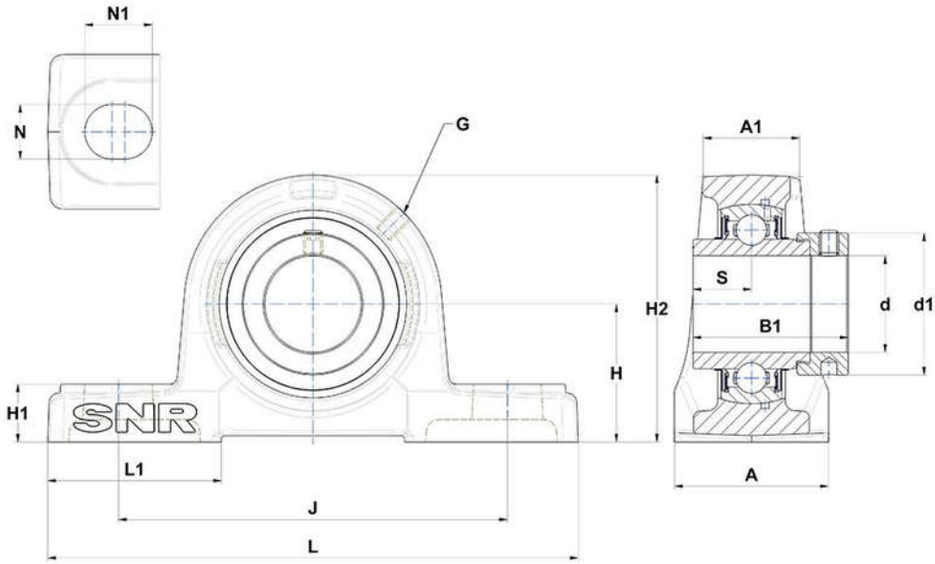

PRODUCT DEFINITION

Brand	SNR
A - Housing width	54 mm
A1 - Housing top width	34 mm
B - Width of Inner Ring	42,8 mm
d - Shaft diameter	40 mm
d1 - Outer dia of eccent. Lock. collar / nut of adapter sleeve	58 mm

NTN Europe
1 rue des Usines · BP 2017 · 74010 Annecy Cedex · France · Tel. +33 (0)4 50 65 30 00
S.A. au capital de 322 639 919 € · RCS ANNECY B 325 821 072 · Id. Fiscale : FR 48 325 821 072
SIRET 325 821 072 00015 · Code APE 2815 Z · Code NACE 28.15

EXP.208
Bearing units

PRODUCT DEFINITION	
G - Grease fitting	M6x1
H - Distance mounting base to centerline spheric. seating diam.	49,2 mm
H1 - Housing foot height	19 mm
H2 - Housing height	100 mm
J - Mounting holes distance	137 mm
L - Housing length	184 mm
L1 - Housing foot length	52 mm
N - Mounting hole dimension	17 mm
N1 - Mounting hole length	23 mm
S - Distance front side/bearing centre	21,4 mm

PRODUCT PERFORMANCE	
C - Dynamic load rating	29600000 mN
C0 - Static load rating	18200000 mN
Operating temperature min.	253,15 °K
Operating temperature max.	373,15 °K

OTHER FEATURES	
Mass	2,28 kg
Recommended tightening torque for set screw	11.5 N-m