WIRING DIAGRAM

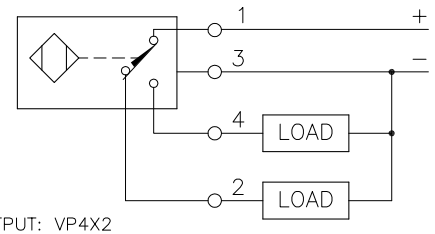

OUTPUT: VP4X2

SHORT–CIRCUIT AND OVERLOAD PROTECTED

MALE END VIEW

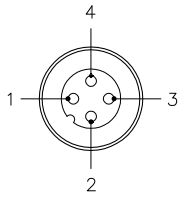

1 = BROWN
2 = WHITE
3 = BLUE
4 = BLACK

SPECIFICATIONS

RATED OPERATING DISTANCE	50 mm = 1.969" (NOMINAL)
MOUNTING MODE	NON–FLUSH, PARTIALLY FLUSH MOUNTABLE
HYSTERESIS	3–15%
MIN. REPEAT ACCURACY	≤ 2%
TEMPERATURE DRIFT	≤ ±10% ≤ ±15%, ≤ –25°C v ≥ +70°C
OPERATING TEMPERATURE	–30°C to +85°C (–22°F to +185°F)
RATED OPERATIONAL VOLTAGE	10–65 VDC
RIPPLE	≤ 10%
RATED OPERATIONAL CURRENT	≤ 200 mA
NO–LOAD CURRENT	≤ 15 mA
MAX. OFF–STATE CURRENT	≤ 0.1 mA
MAX. SWITCHING FREQUENCY	≤ 0.25 kHz
RATED INSULATION VOLTAGE	≤ 0.5 kHz
OUTPUT FUNCTION	4–WIRE, COMPLIMENTARY, PNP
SHORT–CIRCUIT PROTECTED	YES
MAX. VOLTAGE DROP	≤ 1.8 V
REVERSE POLARITY PROTECTION	INCORPORATED
WIRE–BREAK PROTECTION	INCORPORATED
HOUSING MATERIAL	PLASTIC, PBT–GF30–V0
ACTIVE FACE	PLASTIC, PA6–GF30
VIBRATION	55 Hz, 1 mm AMPLITUDE (IN ALL 3 PLANES)
SHOCK	30 g, 11 ms
PROTECTION	IP68
SUPPLY VOLTAGE INDICATION	LED – GREEN
SWITCHING STATUS INDICATION	LED – YELLOW

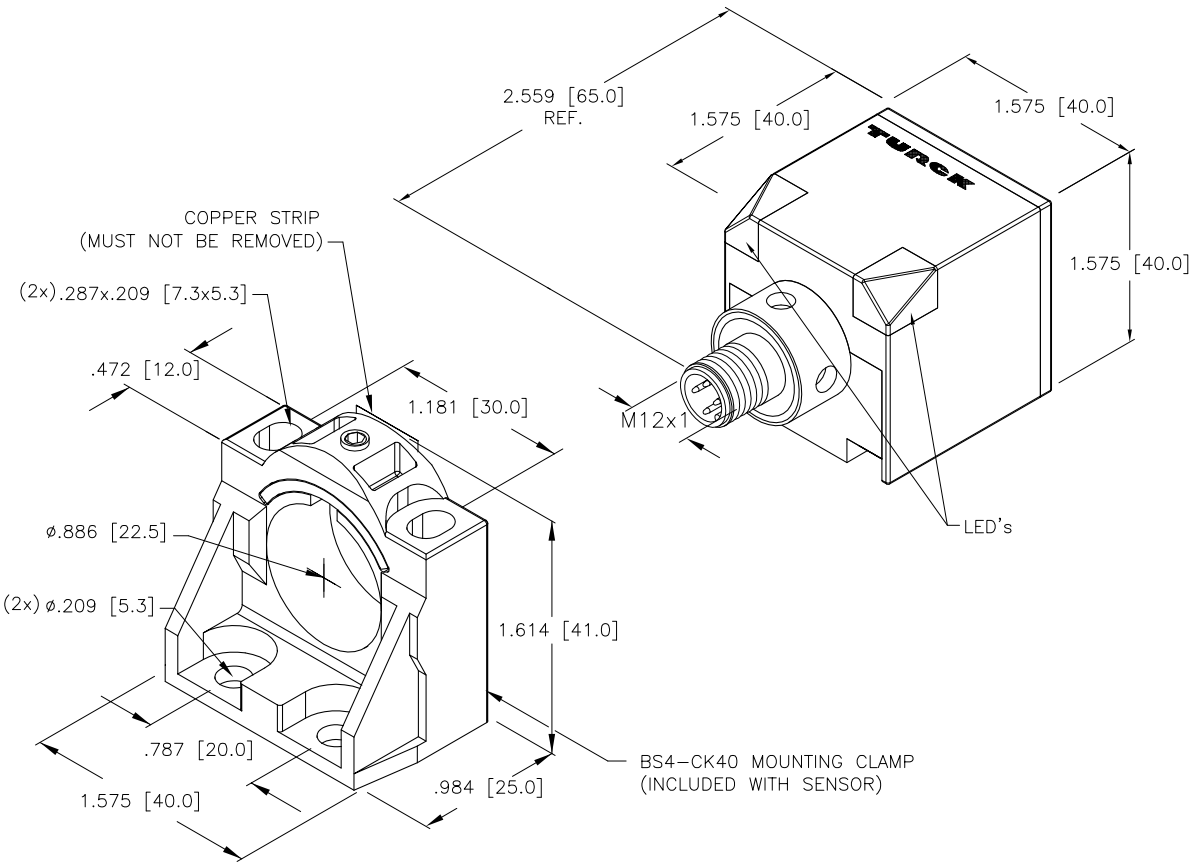

NOTES:

1. SENSING HEAD CAN ROTATE TO 5 DIFFERENT SENSING POSITIONS.

2. UPROX HAS WELD FIELD IMMUNITY, SENSOR IS SUITABLE FOR USE ON RESISTANCE MACHINES.

REV	DESCRIPTION	BY	DATE	ECO NO.
B	UPDATE LED LOCATION ON SENSOR	RDS	10/15/07	19163

RELATED DOCUMENTS
1.
2.
3.
4.

3RD ANGLE PROJECTION

THIS DRAWING IS PROPERTY OF TURCK INC. USE OF THIS DOCUMENT WITHOUT WRITTEN PERMISSION IS PROHIBITED.

TURCK INC
High Technology Sensors and Automation Controls
3000 CAMPUS DRIVE
MINNEAPOLIS, MN 55441
1–800–544–7769
(763) 553–7300
(763) 553–0708 fax
turck.com

MATERIAL: PBT–GF30–V0 PLASTIC

FINISH

ALL DIMENSIONS DISPLAYED ON THIS DRAWING ARE FOR REFERENCE ONLY

CONTACT TURCK FOR MORE INFORMATION

DRFT: RDS | DATE: 07/06/04
DSGN: – | SCALE: NONE

UNIT OF MEASUREMENT
INCH [MILLIMETER]

DO NOT SCALE THIS DRAWING

DESCRIPTION: NI50U–CK40–VP4X2–H1141 W/BS 4

IDENTIFICATION NO.: M1538302 | REV: B

FILE: M1538302 | SHEET 1 OF 1