Fastening Technology

BTL6-A-MF01-A-43
Order Code: BAM010W

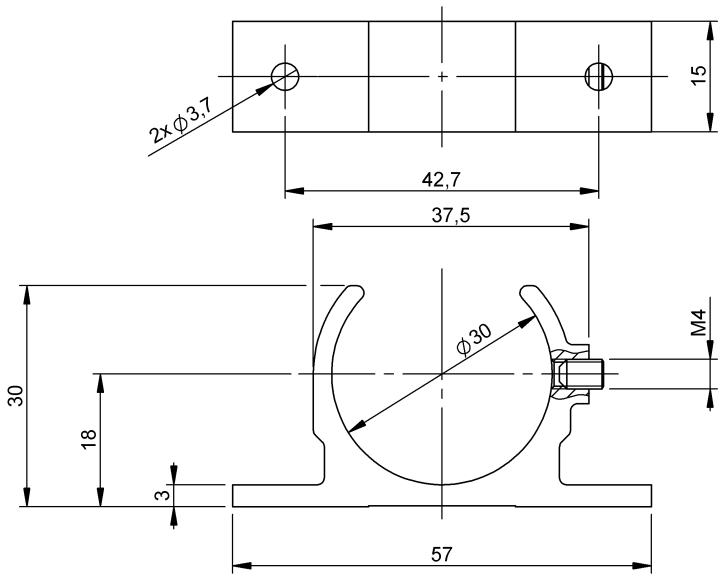

Basic features

Principle of operation	BTL control arm
Scope of delivery	Mounting rod
Style	Support bar

Material

Housing material	Aluminum, Anodized
Housing material, surface protection	Anodized
Surface protection	Anodized

Mechanical data

Mounting part	Through-hole 3.7 mm (2x)