KD5022

Capacitive sensor

KD-3060-BPKG/NI

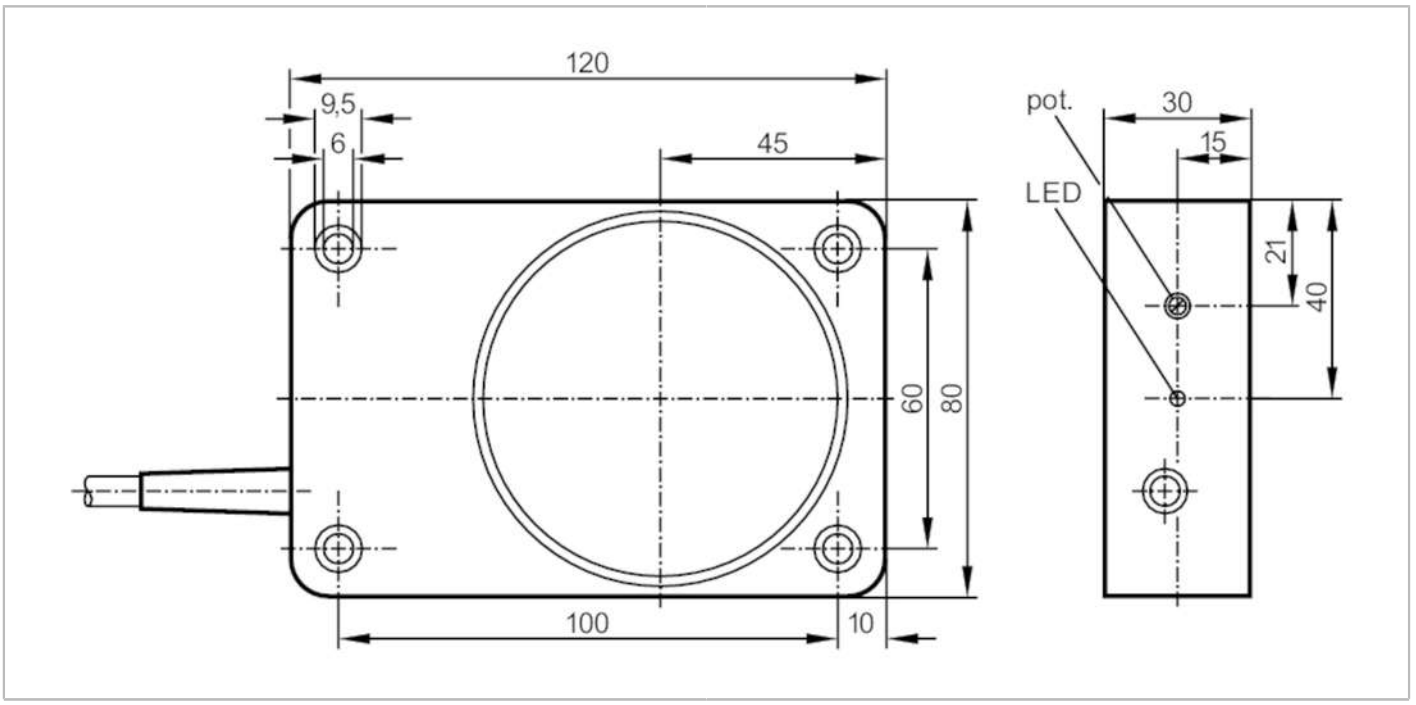

Product characteristics		
Electrical design		PNP
Output function		normally open
Sensing range	[mm]	60
Housing		rectangular
Dimensions	[mm]	120 x 80 x 30
Electrical data		
Operating voltage	[V]	10...36 DC
Current consumption	[mA]	15; (24 V)
Protection class		II
Reverse polarity protection		yes
Outputs		
Electrical design		PNP
Output function		normally open
Max. voltage drop switching output DC	[V]	2.5
Permanent current rating of switching output DC	[mA]	250
Switching frequency DC	[Hz]	10
Short-circuit proof		yes
Overload protection		yes
Detection zone		
Sensing range	[mm]	60
Real sensing range Sr	[mm]	60 ± 10 %
Operating distance	[mm]	0...48.6

KD5022

Capacitive sensor

KD-3060-BPKG/NI

Accuracy / deviations			
Correction factor		glass: 0.4 / water: 1 / ceramics: 0.2 / PVC: 0.2	
Hysteresis	[% of Sr]	1...15	
Switch point drift	[% of Sr]	-15...15	
Operating conditions			
Ambient temperature	[°C]	-25...50	
Protection		IP 65	
Increased immunity		yes	
Tests / approvals			
EMC		EN 60947-5-2	
MTTF	[years]	615	
Mechanical data			
Weight	[g]	405	
Housing		rectangular	
Mounting		non-flush mountable	
Dimensions	[mm]	120 x 80 x 30	
Materials		PPE modified	
Displays / operating elements			
Display		switching status	1 x LED, yellow
Accessories			
Items supplied		spring washers: 4	
		cylinder screws: 4	
Remarks			
Pack quantity		1 pcs.	

Electrical connection

Cable: 2 m, PVC; 3 x 0.5 mm²

Connection

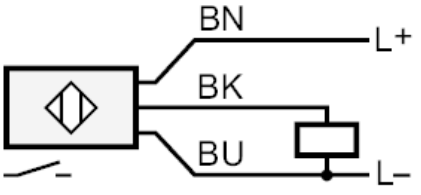

	Core colours :
BN =	brown
BK =	black
BU =	blue