RMU200

Analogue 13 bit multiturn encoder with 0...10 V output

RMU06SVU513--bANU

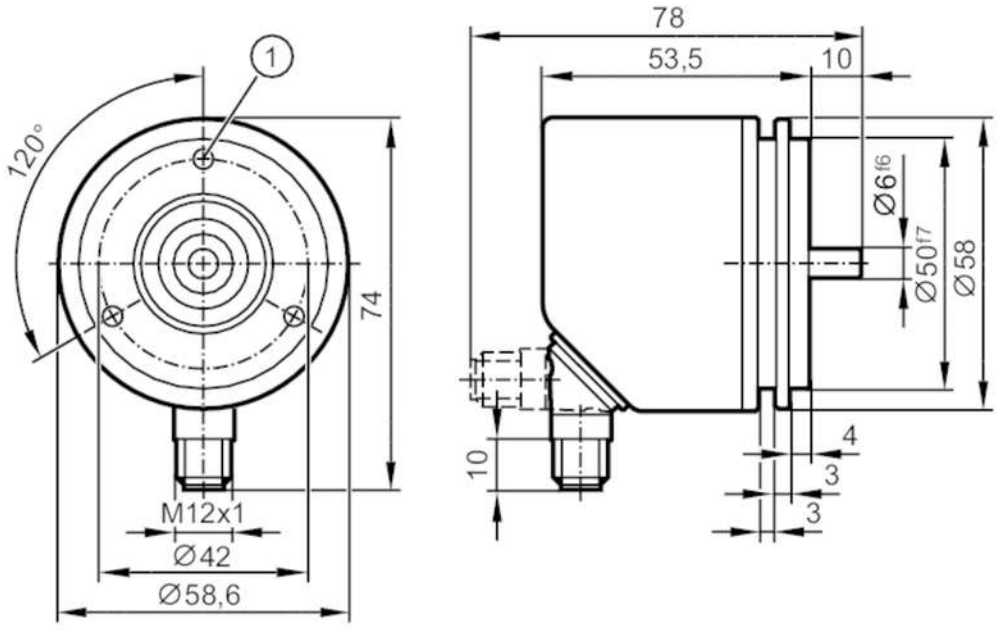

1 M4 x 0.7 Depth 6 mm

Product characteristics		
Resolution		8192 steps; 16 revolutions; 17 bit
Shaft design		solid shaft
Shaft diameter	[mm]	6
Application		
Function principle		absolute
Detection system		magnetic
Electrical data		
Operating voltage	[V]	8...30 DC
Current consumption	[mA]	< 150
Protection class		III
Reverse polarity protection		yes
Max. power-on delay time	[ms]	500
Settling time	[ms]	32
Max. revolution electrical	[U/min]	12000
Inputs / outputs		
Number of inputs and outputs		Number of analogue outputs: 1
Outputs		
Number of analogue outputs		1
Analogue voltage output	[V]	0...10
Min. load resistance	[Ω]	5000
Short-circuit protection		yes
Measuring/setting range		
Resolution		8192 steps; 16 revolutions; 17 bit

RMU200

Analogue 13 bit multiturn encoder with 0...10 V output

RMU06SVU513--bANU

Accuracy / deviations			
Accuracy		10 V ± 10 mV; (accuracy INL: ± 0.1)	
Linearity deviation		± 0,15 % FSO	
Software / programming			
Parameter setting options		start position; end position; central position	
Operating conditions			
Ambient temperature	[°C]	-40...85	
Storage temperature	[°C]	-40...85	
Max. relative air humidity	[%]	95; (condensation not permissible)	
Protection		IP 65; (on the housing: IP67)	
Tests / approvals			
Shock resistance		EN 60068-2-27	100 g half-sine / 6 ms
Vibration resistance		EN 60068-2-29	10 g half-sine / 16 ms
MTTF	[years]	258	
UL approval		power supply	Class 2
Mechanical data			
Weight	[g]	347.5	
Dimensions	[mm]	Ø 58.6 / L = 63.5	
Materials		flange: aluminium; housing: stainless steel (444/1.4521)	
Max. revolution, mechanical	[U/min]	12000	
Max. starting torque	[Nm]	1	
Reference temperature torque	[°C]	20	
Shaft design		solid shaft	
Shaft diameter	[mm]	6	
Shaft material		stainless steel	
Max. shaft load axial (at the shaft end)	[N]	40	
Max. shaft load radial (at the shaft end)	[N]	60	
Fixing flange		synchro-flange	

RMU200

Analogue 13 bit multiturn encoder with 0...10 V output

RMU06SVU513--bANU

Electrical connection - plug

Connector: 1 x M12, radial, can also be used axially; coding: A; Moulded body: stainless steel (316 / 1.4401); Maximum cable length: 100 m

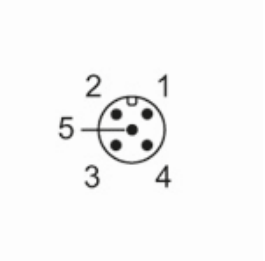

1	L+
2	OUT
3	L-
4	Set 2
5	Set 1
	Screen plug