1

L101X AlertAlight

High Powered Xenon Tube Beacon
5J Xenon Flash Tube
Three modes : Flashing 1 Hz*,
Flashing 1.5Hz† (DC units Only),
Double Strike† (DC Units Only)
IP Rating: IP66
Temp: -25°C to +55°C
Unit weight: 200g
CE

Dimensions : 86.0 x 86.0mm
1.5mm² terminals
Cable entry: M20 cable entry (IP66)
Dependant on Back Box selected

[z] = Back Box Type
B = L101 type M = Multi-purpose type
A = A100 type S = Sonora type

[y] = Lens colour
R = Red* A = Amber G = Green
B = Blue C = Clear*

[x] = Housing colour
G = Grey R = Red W = White

Order code	Voltage	Current
L101XDC012[z][x]/[y]	10-14 VDC/AC	500mA/380mA
L101XDC024[z][x]/[y]*	20-28 VDC/AC	250mA/300mA
L101XDC048[z][x]/[y]*	42-52 VDC	175mA
L101XAC048[z][x]/[y]	48 VAC±10%	250mA
L101XAC115[z][x]/[y]	115 VAC±10%	70mA
L101XAC230[z][x]/[y]	230 VAC±10%	35mA

†Flashing 1.5Hz and Double Strike modes are not available on the following units: L101XDC012[b][x]/[y] when used with an AC supply; L101XAC048[b][x]/[y]; L101XAC115[b][x]/[y] & L101XAC230[b][x]/[y].

*Denotes models with VdS/CPR Approval for EN54-23, 24/48 VDC application only.

Tel : +44 (0)2 8743 8880 Fax : +44 (0)20 8740 4200
mail : sales@e2s.com web : www.e2s.com

3

Back Box Type

Standard L101 Backbox (B)

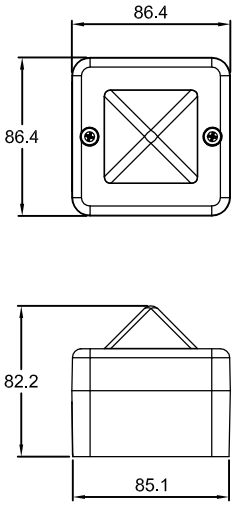

Multi-purpose Backbox (M)

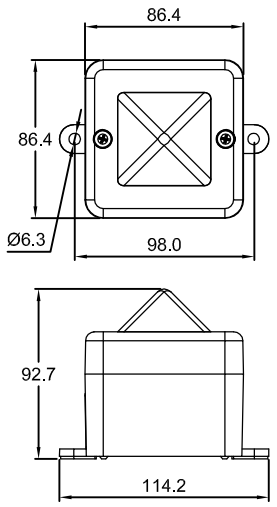

Sonora Backbox (S)

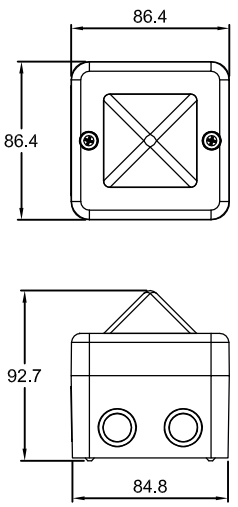

A100 Backbox (A)

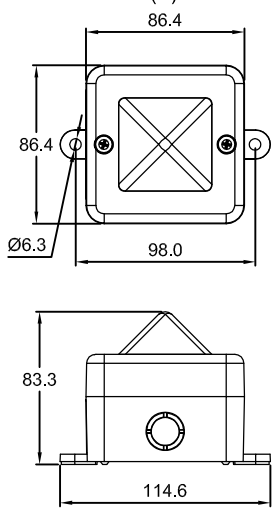

2

ATTENTION: Installation must be carried out by an electrician in compliance with the latest codes and regulations.

ATTENTION: Disconnect from power source before installation or service to prevent electric shock.

ATTENTION: On strobe beacons allow a minimum of 2 minutes for hazardous high voltage to discharge from unit.

ATTENTION: Lens on unit will be hot allow to cool prior to removal.

4

Coverage Area According to EN54-23

Unit	Category C	Category W	Category O	Power
L101XDC024[z][x]/C	C-9-6.8	W-2.4-4.8	O-4.8-10	6W
	V=326.9m³	V=55.3m³	V=230.4m³	
L101XDC024[z][x]/R	C-3-2.6	N/A	O-1.9-3.6	6W
	V=15.9m³	N/A	V=13.0m³	
L101XDC048[z][x]/C	C-9-7	W-2.5-5	O-5-10	8.4W
	V=346.4m³	V=62.5m³	V=250.0m³	
L101XDC048[z][x]/R	C-3-3	N/A	O-2-4	8.4W
	V=21.2m³	N/A	V=16.0m³	

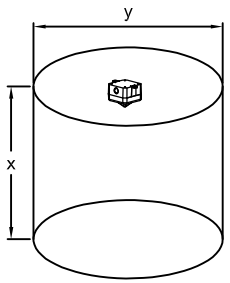

Category C-x-y (Ceiling mounted): Ceiling mounted, where x is the maximum ceiling height and y the diameter of the cylindrical volume covered by the VAD.

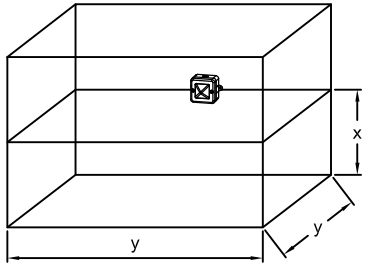

Category W-x-y (Wall mounted): Wall mounted, where x is the maximum mounting height from the floor and y is the maximum length of the sides of the square floor area covered by the VAD.

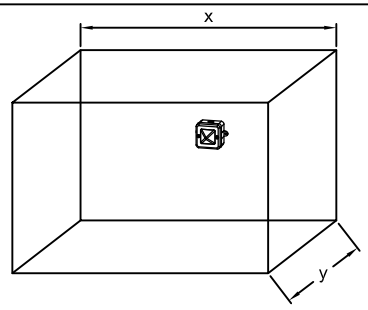

Category O-x-y (Open class): Centrally wall mounted, where x is the max height and width of the wall area covered by the device and y is the max depth of the volume covered by the VAD or ceiling mounted where x is the max width and length of the floor area covered of the VAD and y is the max ceiling height.

A

AlertAlight
L101X

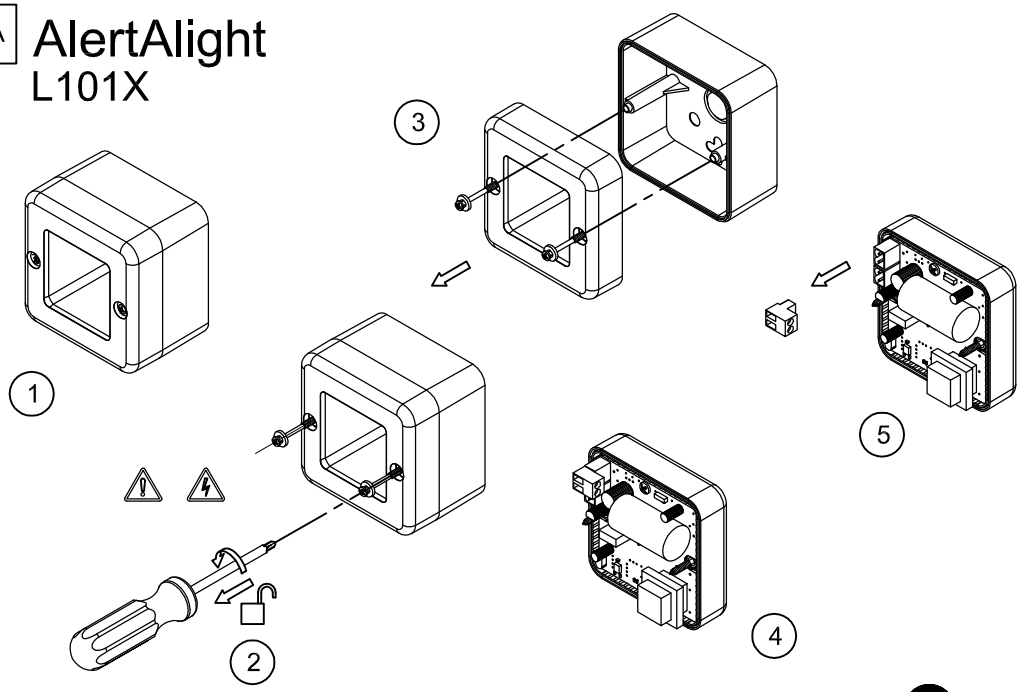

Tel : +44 (0)20 8743 8880 Fax : +44 (0)20 8740 4200
mail : sales@e2s.com web : www.e2s.com

C

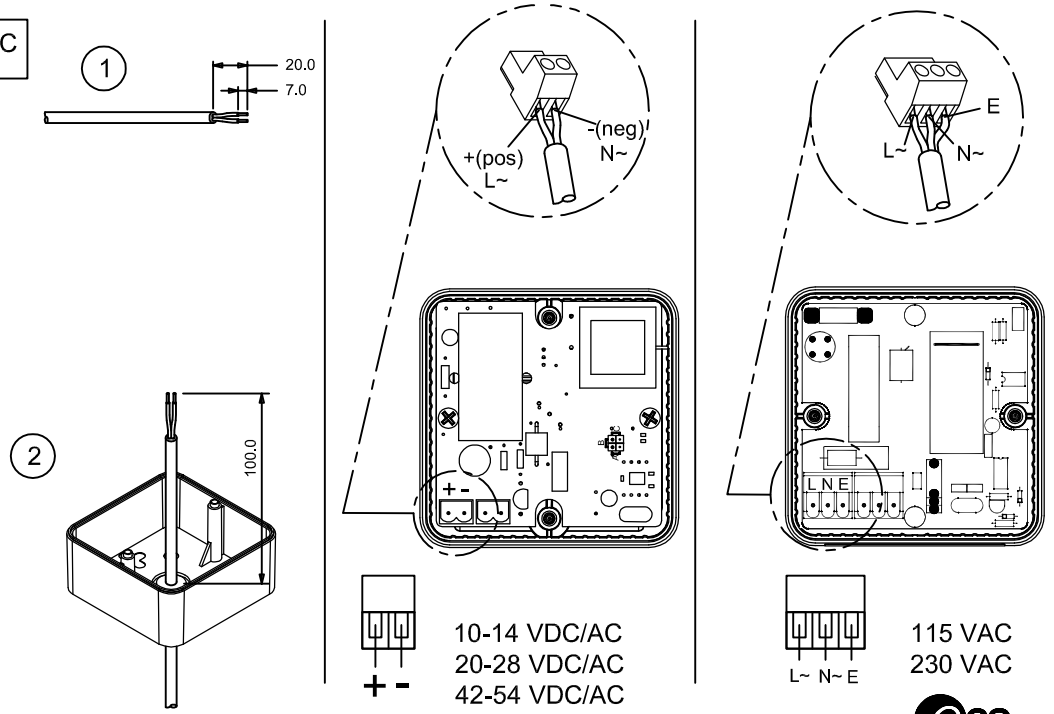

B

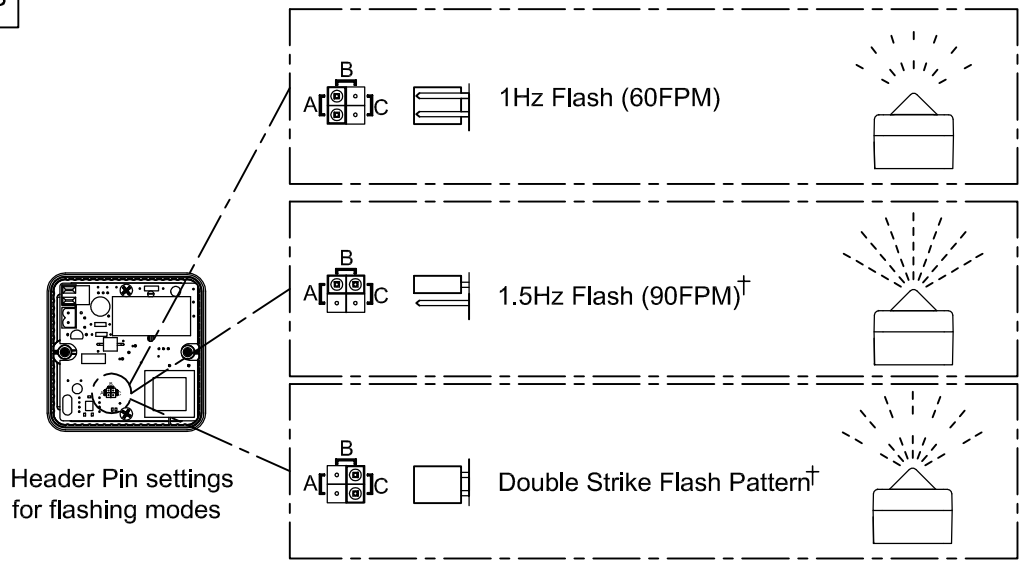

†Flashing 1.5Hz and Double Strike modes are not available on the following units: L101XDC012[b][x]/[y] when used with an AC supply; L101XAC048[b][x]/[y]; L101XAC115[b][x]/[y] & L101XAC230[b][x]/[y].

D

