E10030

Hexagon nut

NUT M30X1.5 BRASS 2 PIECES

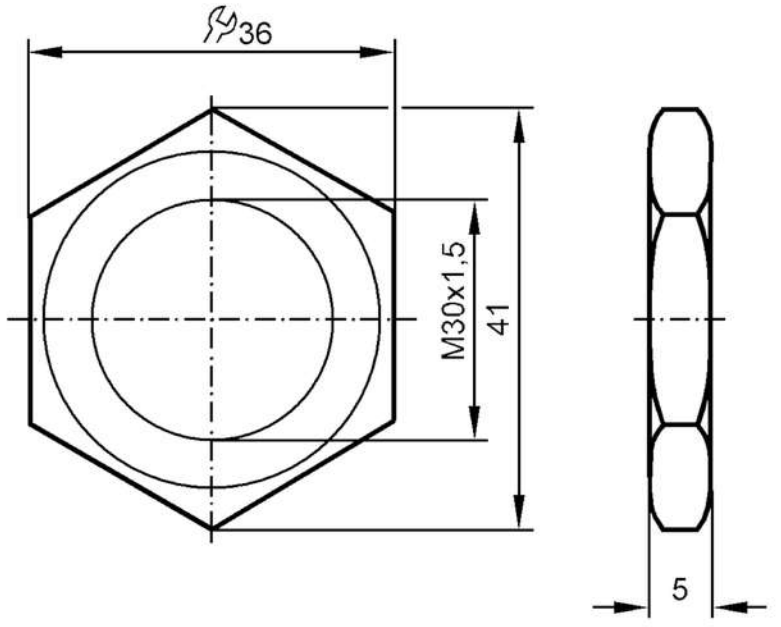

Mechanical data		
Weight	[g]	35.6
Dimensions	[mm]	M30 x 1.5
Thread designation		M30 x 1.5
Materials		brass nickel-plated
Remarks		
Pack quantity		2 pcs.