PQ3809

Pressure sensor for pneumatics

PQ-1-1-KHR18-KFPKG/AS/

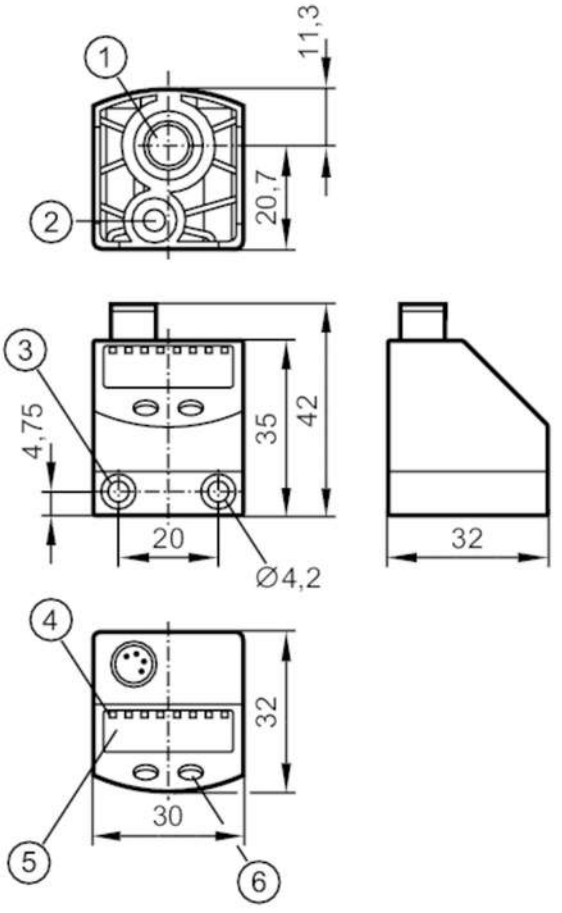

1 main pressure connection G 1/8 Tightening torque < 8 Nm insertion depth < 7.5 mm
2 auxiliary pressure connection M 5 Tightening torque < 2.5 Nm insertion depth < 7.5 mm
3 Tightening torque < 0.5 Nm
4 LEDs Display unit / switching status
5 alphanumeric display 4-digit
6 programming button

Product characteristics					
Number of inputs and outputs	Number of digital outputs: 1; Number of analogue outputs: 1				
Measuring range	-1...1 bar	-1000...1000 mbar	-14.6...14.6 psi	-29.4...29.4 inHg	-100...100 kPa
Process connection	threaded connection G 1/8 internal thread internal thread:M5				
Application					
Special feature	Gold-plated contacts				
Application	for industrial applications				
Conditionally suitable for	other media on request				
Medium temperature [°C]	0...60				
Min. bursting pressure	30 bar	435 psi	886 inHg	3000 kPa	
Note on min. burst pressure	max. overpressure on second pressure connection: 12 bar / 1200 kPa / 174 PSI / 354,4 inHg / 1,2 MPa				
Pressure rating	20 bar	290 psi	591 inHg	2000 kPa	
Vacuum resistance [mbar]	-1000				

PQ3809

Pressure sensor for pneumatics

PQ-1-1-KHR18-KFPKG/AS/

Type of pressure		relative pressure; differential pressure; vacuum
Electrical data		
Operating voltage	[V]	18...32 DC; (to SELV/PELV)
Current consumption	[mA]	< 50
Min. insulation resistance	[MΩ]	100; (500 V DC)
Protection class		III
Reverse polarity protection		yes
Overvoltage protection		yes; (< 40 V)
Power-on delay time	[s]	0.5
Integrated watchdog		yes
Inputs / outputs		
Number of inputs and outputs		Number of digital outputs: 1; Number of analogue outputs: 1
Outputs		
Total number of outputs		2
Output signal		switching signal; analogue signal; IO-Link; (configurable)
Electrical design		PNP
Number of digital outputs		1
Output function		normally open / normally closed; (parameterisable)
Max. voltage drop switching output DC	[V]	2
Permanent current rating of switching output DC	[mA]	100
Switching frequency DC	[Hz]	< 100
Number of analogue outputs		1
Analogue current output	[mA]	4...20
Max. load	[Ω]	500
Short-circuit protection		yes
Type of short-circuit protection		pulsed

Measuring/setting range						
Measuring range		-1...1 bar	-1000...1000 mbar	-14.6...14.6 psi	-29.4...29.4 inHg	-100...100 kPa
Set point SP		-0.98...1 bar	-14.2...14.6 psi	-28.8...29.4 inHg	-98...100 kPa	
Reset point rP		-0.99...0.99 bar	-14.4...14.4 psi	-29.1...29.1 inHg	-99...99 kPa	
In steps of		0.01 bar	0.2 psi	0.3 inHg	1 kPa	

Accuracy / deviations		
Switch point accuracy	[% of the span]	< ± 0,5
Repeatability	[% of the span]	< ± 0,1; (with temperature fluctuations < 10 K)
Characteristics deviation	[% of the span]	< ± 0,25 (BFSL) / < ± 0,5 (LS); (BFSL = Best Fit Straight Line; LS = limit value setting)
Hysteresis deviation	[% of the span]	< ± 0,25
Long-term stability	[% of the span]	< ± 0,05; (per 6 months)

PQ3809

Pressure sensor for pneumatics

PQ-1-1-KHR18-KFPKG/AS/

Temperature coefficient zero point [% of the span / 10 K]		0,2; (0...60 °C)	
Temperature coefficient span [% of the span / 10 K]		0,2; (0...60 °C)	
Response times			
Response time	[ms]	< 6	
Delay time programmable dS, dr	[s]	0; 0,002...5	
Step response time analogue output	[ms]	6	
Software / programming			
Parameter setting options		hysteresis / window; normally open / normally closed; analogue output; IO-Link; switching logic; switch-on/switch-off delay; Damping; Display unit	
Interfaces			
Communication interface		IO-Link	
Transmission type		COM2 (38,4 kBaud)	
IO-Link revision		1.1	
SDCI standard		IEC 61131-9 FDIS	
Profiles		Smart Sensor: Process Data Variable; Device Identification	
SIO mode		yes	
Required master port type		A	
Process data analogue		1	
Process data binary		2	
Min. process cycle time	[ms]	2.3	
Supported DeviceIDs		Type of operation	DeviceID
		Default	366
Operating conditions			
Ambient temperature	[°C]	0...70	
Storage temperature	[°C]	-25...85	
Protection		IP 65	
Tests / approvals			
EMC		DIN EN 61000-6-2	
		DIN EN 61000-6-3	
Shock resistance		DIN EN 60068-2-27	50 g (11 ms)
Vibration resistance		DIN EN 60068-2-6	20 g (10...2000 Hz)
MTTF	[years]	437	
Pressure Equipment Directive		Sound engineering practice; can be used for group 2 fluids; group 1 fluids on request	
Mechanical data			
Weight	[g]	87	
Materials		PBT; FKM; polyester	
Materials (wetted parts)		brass; FKM; silicon (coated); PBT	
Min. pressure cycles		50 million	
Process connection		threaded connection G 1/8 internal thread internal thread:M5	

PQ3809

Pressure sensor for pneumatics

PQ-1-1-KHR18-KFPKG/AS/

Displays / operating elements		
Display	Display unit	4 x LED, green
	switching status	1 x LED, yellow
	function display	alphanumeric display, 4-digit
	measured values	alphanumeric display, 4-digit
Display unit	bar; kPa; psi; inHg	

Remarks	
Pack quantity	1 pcs.

Electrical connection

Connector: 1 x M8; coding: A; Contacts: gold-plated



Connection

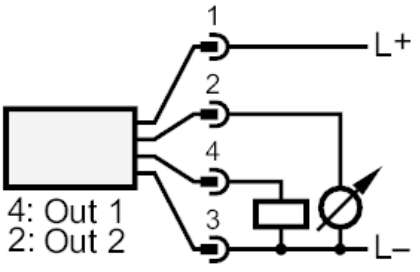

OUT1	switching output IO-Link
OUT2	analogue output