

Image may differ from product. See technical specification for details.

TUJ 40 TF

Take-up cast iron unit with insert ball bearing, set screw locking and extended inner ring, JIS

Take-up ball bearing units, consisting of an insert bearing based on a sealed deep groove ball bearing mounted in a grey cast iron housing. Typically mounted in take-up frames, the unit has an inner ring extended on both sides and is locked by tightening a (set) screw on the inner ring, which makes it easy to mount.

- Designed for an alternating rotation
- Quick and easy to mount onto the shaft
- Accommodate static initial misalignment
- Long service life
- Reduced noise and vibration levels

Overview

Dimensions

Shaft diameter	40 mm
Housing overall width	49 mm
Bearing width, total	49.2 mm

Performance

Basic dynamic load rating	30.7 kN
Basic static load rating	19 kN
Limiting speed	4 800 r/min
Note	Limiting speed with shaft tolerance h6

Properties

Housing type	Take-up
Retaining feature, inner ring	Set screws
Bore type	Cylindrical
Rubber seating ring	Without
Material, housing	Cast iron
Material, bearing	Bearing steel
Coating	Without
Sealing, bearing	Seal and flinger on both sides
Sealing type	Contact, standard
Sealing, unit	Without
Lubricant	Grease
Relubrication hole	With
Grease fitting	With

Logistics

Product net weight	2.33 kg
eClass code	23-05-16-02
UNSPSC code	31171536

Technical specification

Compliance with standard	JIS
Purpose specific	For material handling applications
Material, housing	Cast iron
Sealing, bearing	Seal and flinger on both sides
Sealing type, bearing	Contact, standard
Sealing, unit	Without
Coating	Without

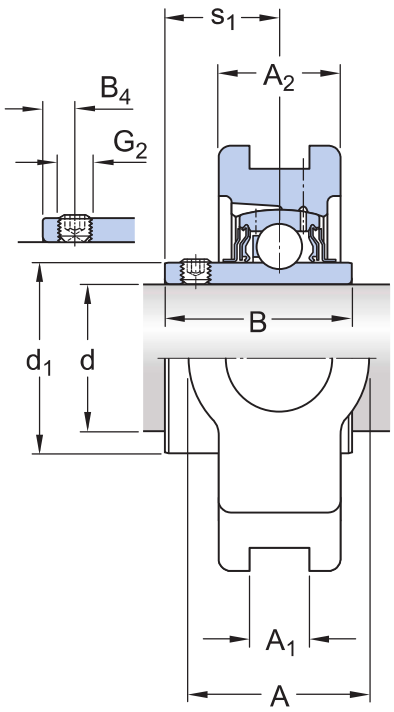

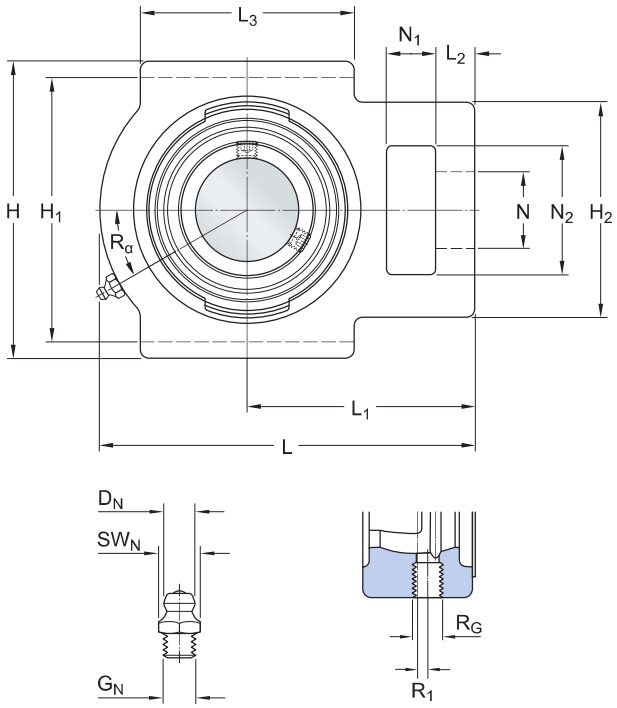

Dimensions

d	40 mm	Bore diameter
d_1	≈ 51.8 mm	Shoulder diameter of inner ring
A	49 mm	Overall width
A_1	16 mm	Width of piloting groove
A_2	33 mm	Width of flange in which piloting grooves are provided
B	49.2 mm	Width of inner ring
B_4	8 mm	Distance from locking device side face to thread centre
H	115 mm	Overall height
H_1	102 mm	Distance between bottoms of piloting grooves
H_2	83 mm	Height of attachment end
L	145 mm	Overall length
L_1	88 mm	Distance from attachment end face to centre line of spherical seat diameter
L_2	15 mm	Length attachment end
L_3	83 mm	Length of piloting groove
N	29 mm	Diameter of attachment bolt hole
N_1	19 mm	Length of attachment slot

N_2	50 mm	Height of attachment slot
s_1	30.2 mm	Distance from locking device side face to raceway centre

GREASE FITTING

D_N	6.5 mm	Diameter of head sphere of grease fitting
SW_N	7 mm	Hexagonal key size for the grease fitting
G_N	1/4-28 SAE-LT	Thread of grease fitting

THREADED HOLE

R_G	1/4-28 UNF	Housing thread for the grease fitting
R_1	4 mm	Axial position of the housing thread
R_α	30 °	Angular position of the housing thread

Calculation data

Basic dynamic load rating	C	30.7 kN
Basic static load rating	C_0	19 kN
Fatigue load limit	P_u	0.8 kN
Limiting speed		4 800 r/min
		Limiting speed with shaft tolerance h6

Mounting information

Set screw	G_2	M8x1
Hexagonal key size for set screw		4 mm
Recommended tightening torque for set screw		6.5 N·m

Tolerances and clearances

The values depend on the included bearing:

- Bore diameter tolerance → table 1
- Radial internal clearance → table 2
- Recommended fit → table 3
- Shaft tolerance → table 4

Compatible products

Component

Take-up cast iron housing for insert bearing, JIS	TUJ 508
Insert bearing with set screw locking and extended inner ring	YAR 208-2F

More Information

Product details

- Take-up units to ISO standards
- Take-up units to North American standards
- Take-up units to Japanese Industrial Standards (JIS)
- Take-up units, not standardized (SKF Food Line)
- Permissible misalignment
- Locating/non-locating support
- Loads
- Temperature limits
- Permissible speed
- Lubrication
- Mounting and dismounting
- Ordering information
- Designation system

Engineering information

- Principles of ball bearing units selection and application - Download catalogue (4.9 MB)
- Principles of selecting mounted bearing solutions
- Bearing failure and how to prevent it

Tools

- SKF Product select
- Bearing Frequency Calculator

Terms of use

By accessing and using this website / app owned and published by AB SKF (publ.) (556007-3495 · Gothenburg) (“SKF”), you agree to the following terms and conditions:

Warranty Disclaimer and Limitation of Liability
Although every care has been taken to assure the accuracy of the information on this website / app, SKF provides this information "AS IS" and DISCLAIMS ALL WARRANTIES, EXPRESS OR IMPLIED, INCLUDING, BUT NOT LIMITED TO, IMPLIED WARRANTIES OF MERCHANTABILITY AND FITNESS FOR A PARTICULAR PURPOSE. You acknowledge that your use of this website / app is at your sole risk, that you assume full responsibility for all costs associated with use of this website / app, and that SKF shall not be liable for any direct, incidental, consequential, or indirect damages of any kind arising out of your access to, or use of the information or software made available on this website / app.

Any warranties and representations in this website / app for SKF products or services that you purchase or use will be subject to the agreed upon terms and conditions in the contract for such product or service.

Further, for non-SKF websites / apps that are referenced in our website / app or where a hyperlink appears, SKF makes no warranties concerning the accuracy or reliability of the information in these websites / apps and assumes no responsibility for material created or published by third parties contained therein. In addition, SKF does not warrant that this website / app or these other linked websites / apps are free from viruses or other harmful elements.

Third Party Services
When viewing YouTube content via the SKF website(s) (i.e. using YouTube API Services), you agree to be bound by the YouTube Terms of Service.

Copyright
Copyright in this website / app copyright of the information and software made available on this website / app rest with SKF or its licensors. All rights are reserved. All licensed material will reference the licensor that has granted SKF the right to use the material. The information and software made available on this website / app may not be reproduced, duplicated, copied, transferred, distributed, stored, modified, downloaded or otherwise exploited for any commercial use without the prior written approval of SKF. However, it may be reproduced, stored and downloaded for use by individuals without prior written approval of SKF. Under no circumstances may this information or software be supplied to third parties.

This website /app includes certain images used under license from Shutterstock, Inc.

Trademarks and Patents
All trademarks, brand names, and corporate logos displayed on the website / app are the property of SKF or its licensors, and may not be used in any way without prior written approval by SKF. All licensed trademarks published on this website / app reference the licensor that has granted SKF the right to use the trademark. Access to this website / app does not grant to the user any license under any patents owned by or licensed to SKF.

Changes
SKF reserves the right to make changes or additions to this website / app at any time.