E23002

Sound deflector

BEAM DEFLECTOR UG RANGE 2.2m

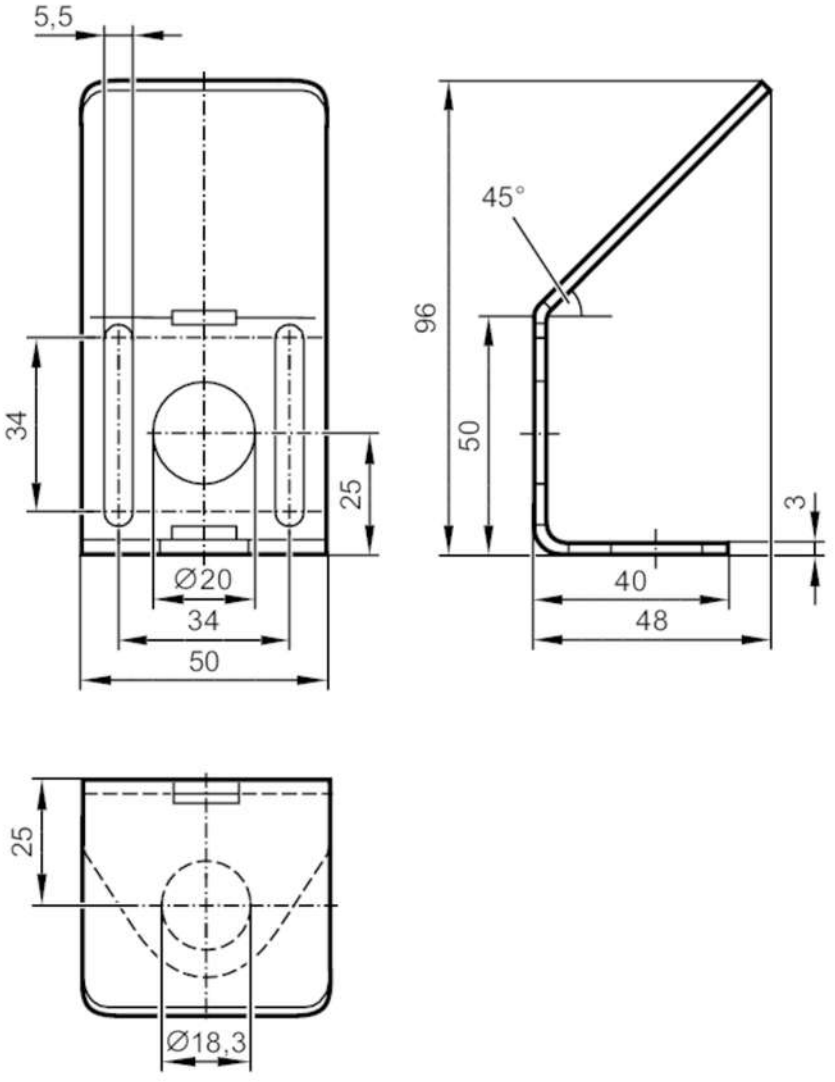

Application		
Design		for types UG, UG Cube
Mechanical data		
Weight	[g]	138
Materials		stainless steel (1.4301 / 304)
Remarks		
Pack quantity		1 pcs.