Slot sensor

BGL 30A-003-S49
Order code: BGL0019

BALLUFF
sensors worldwide





LASER CLASS 1 per IEC 60825-1:
2003-10

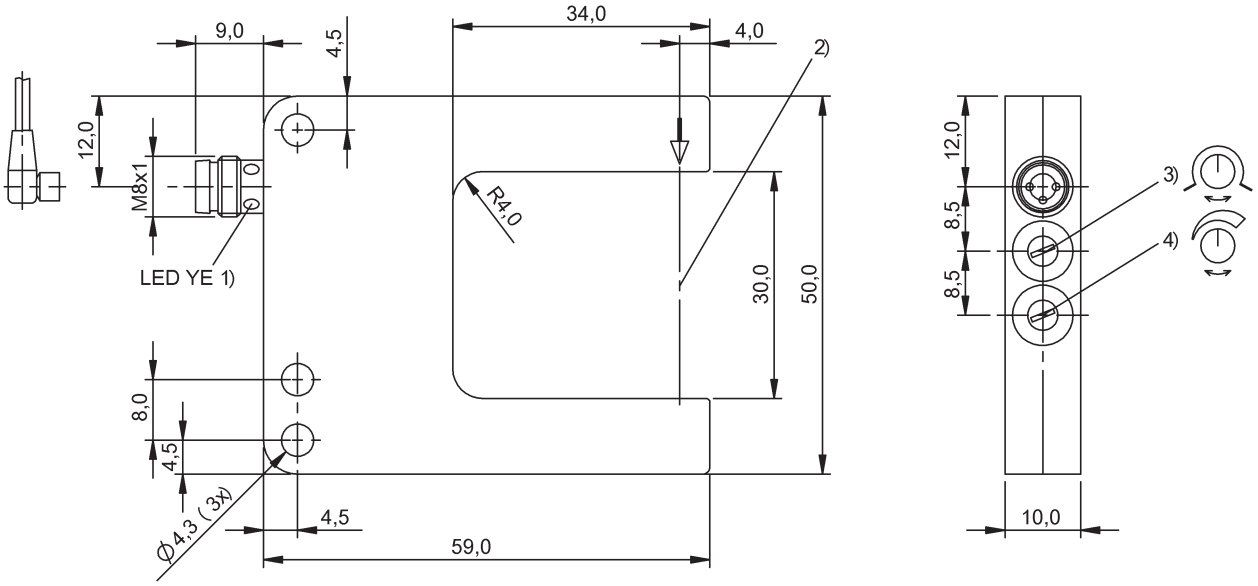

1) Output function 2) Optical axis 3) Light-on / Dark-on 4) Sensitivity

- **Slot sensor**
- **Series A**
- **Laser red light**
- **up to 50 mm**

General attributes

Adjuster	Potentiometer, 270° (2x)
Approvals / Conformity	CE cULus
Basic standard	IEC 60947-5-2
Enclosure Type per IEC 60529	IP67
Indicator	Output function - LED YE
Polarity reversal protected	Yes
Series	Series A
Setting	Sensitivity Light-on/dark-on
Short circuit protected	Yes

Electrical attributes

Connection type	Connector
Eff. operating current Ie	200 mA
Eff. operating voltage Ue DC	24.0 V
Electrical version	DC, direct current
Hysteresis H max.	0.020 mm
Load capacitance max. (at Ue)	0.50 µF
No-load current max. Io at Ue	20 mA
Operating voltage UB max. DC [V]	30.0 V
Operating voltage UB min. DC [V]	10.0 V
Rated insulation voltage Ui	75 V DC
Ripple max. (% of Ue)	10 %
Switching freq. f max. (at Ue)	5000 Hz
Switching function	NO/NC
Switching output	PNP (1X)
Turn on time ton max.	0.100 ms
Voltage drop Ud max. (at Ie)	3.0 V

Mechanical attributes

Ambient temperature Ta max.	60 °C
Ambient temperature Ta min.	-10 °C
Connector type	M8x1-S49
Fork width	30 mm
Housing material	GD-Zn
Length 1	10.0 mm
Length 2	68.0 mm
Length 3	50.0 mm
Mounting type	Screw M4
Repeat accuracy lateral max.	10 µm
Sensing face material	Glass
Style	Slot, straight connection

BGL 30A-003-S49
Order code: BGL0019

BALLUFF
sensors worldwide

Surface protection	Painted

Optical attributes

Ambient light max.	10,000 Lux
Average power Po max.	< 390 µW (IEC 60825-1)
Laser Class per IEC 60825-1	1
Light spot size, typical	Ø0.3 mm light exit
Light type	Laser red light
Principle of optical operation	Through-beam
Switching function, optical	NO/NC: dark-on/light-on
Wavelength	655 nm

Additional text
Order accessories separately.
For additional information, refer to user's guide.
Factory default setting for switching output: Normally open.
Reference object (test target): Steel sheet metal, 50 x 50, thickness0.5 mm, lateral approach.
The sensor is functional again after the overload has been eliminated.
Only for NFPA 79 applications (machines with a supply voltage of maximum 600 volts).
Device shall be connected only by using any R/C (CYJV2) cord, having suitable ratings.

