KombiSIGN 50 / Accessories

Contact box for cable exit at side



Part No.: 975.840.01

MECHANICAL DATA	
Height	29 mm
Diameter	70 mm
Materials	PA-GF
Housing colour	Black
Protection category	IP54
Cable entry	Screwed cable gland
Cable entry minimum	d = 5 mm
Cable entry maximum	d = 10 mm
Weight with packaging	71 g
Product weight	71 g

APPROVAL DATA	
WEEE	No
Conforms with RED directive	No
Conforms with ATEX-directive	No
Conforms with CCC	No
Conforms with UL	No
Conforms with FCC	No
Conforms with IC	No
EAC certificate available	No
Conforms with AS-I	No
ICAO Certification	No
Conforms with DNV	No
Conforms with RoHS CN	No

! For additional installation and mounting information, refer to the appropriate user guide at www.werma.com. This printed copy is for information only and is subject to alteration.

KombiSIGN 50 / Accessories

Contact box for cable exit at side

DRAWING

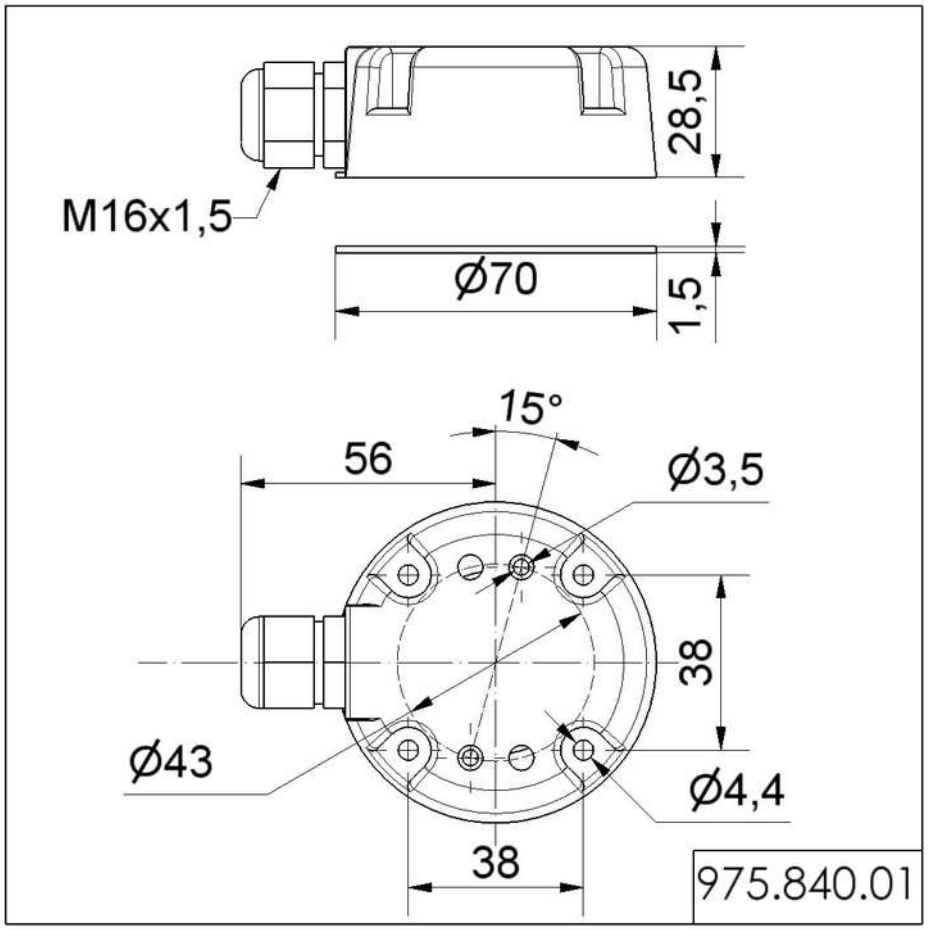

! For additional installation and mounting information, refer to the appropriate user guide at www.werma.com. This printed copy is for information only and is subject to alteration.