


Image may differ from product. See technical specification for details.

# FNL 513 B

## FNL cast flanged, non-split housing

FNL cast flanged, non-split housings are well-proven machine parts that provide simple and reliable housing in applications without horizontal frames. They enable the full service life potential of the incorporated bearings to be exploited with less need for maintenance. FNL housings are supplied with a cover either for shaft ends (suffix A) or for through shafts (suffix B). Smaller sizes (up to and including size 13) have a triangular flange, larger sizes have a square flange.

- Well-proven
- Less need for maintenance

# Overview

## Dimensions

| | |
|---|---|
| Diameter of bearing seat | 120 mm |
| Pitch diameter of bolt holes of round and triangle flange type housing | 190 mm |
| Attachment bolt diameter | 12 mm |

## Properties

| | |
|---|---|
| Housing type | Flanged |
| Housing configuration | One-piece |
| Mounting arrangement | Through shaft |
| Number of bolt holes for fasteners | 3 |
| Material, housing | Cast iron |
| Bearing housing seal type | Lip seal |
| Housing lubrication feature/possibility | Grease |

## Logistics

| | |
|---|---|
| Product net weight | 6.4 kg |
| eClass code | 23-05-17-02 |
| UNSPSC code | 31171519 |

## Technical specification

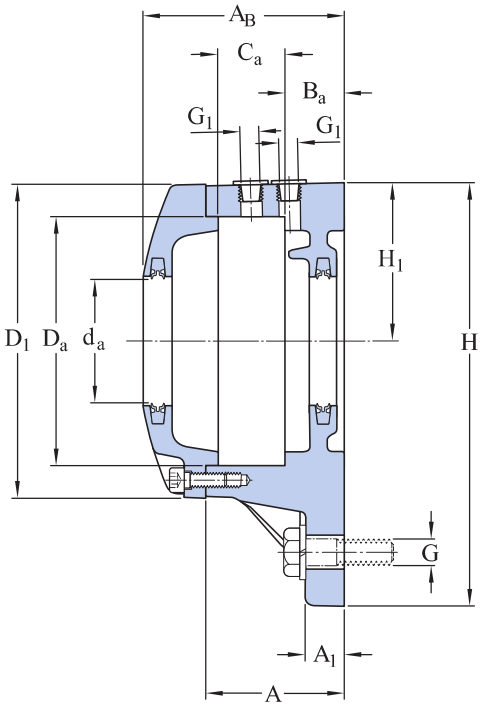


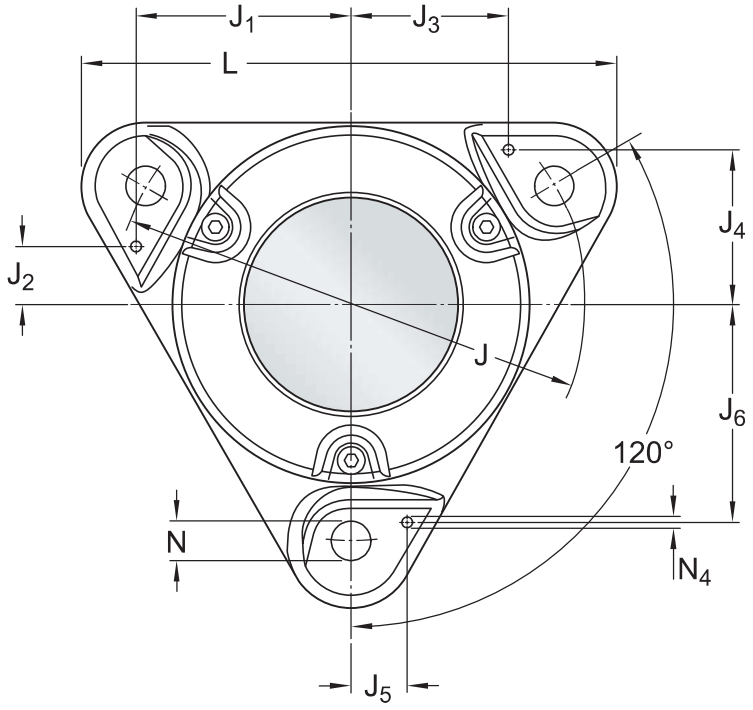


## Dimensions

### BEARING SEAT

| | | |
|---|---|---|
| $D_a$ | 120 mm | Diameter of bearing seat |

| | | |
|---|---|---|
| $C_a$ | 33 mm | Width of bearing seat |
| $H_1$ | 78 mm | Centre height of bearing seat |
| $B_a$ | 22 mm | Distance bearing seat to support surface |

## OUTSIDE DIMENSIONS

| | | |
|---|---|---|
| $d_a$ | 60 mm | Shaft diameter |
| A | 60 mm | Base width |
| $A_1$ | 15 mm | Foot width |
| $A_B$ | 86 mm | Width |
| $D_1$ | 152 mm | Outside diameter of housing cover |
| $G_1$ | 1/8-27 NPSF | Thread of relubrication holes |
| H | 203 mm | Height |
| L | 225 mm | Length |
| J | 190 mm | Pitch diameter of attachment bolts |
| N | 14 mm | Diameter of attachment bolt hole |

## DOWEL PINS

| | | |
|---|---|---|
| $J_1$ | 90 mm | Position of dowel pin |
| $J_2$ | 24 mm | Position of dowel pin |
| $J_3$ | 66 mm | Position of dowel pin |
| $J_4$ | 66 mm | Position of dowel pin |
| $J_5$ | 24 mm | Position of dowel pin |
| $J_6$ | 90 mm | Position of dowel pin |
| $N_{4\ max.}$ | 8 mm | Diameter of dowel pins |

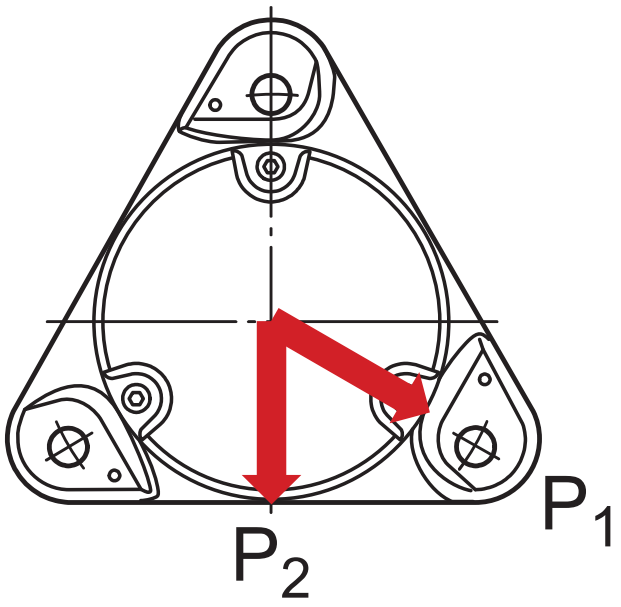


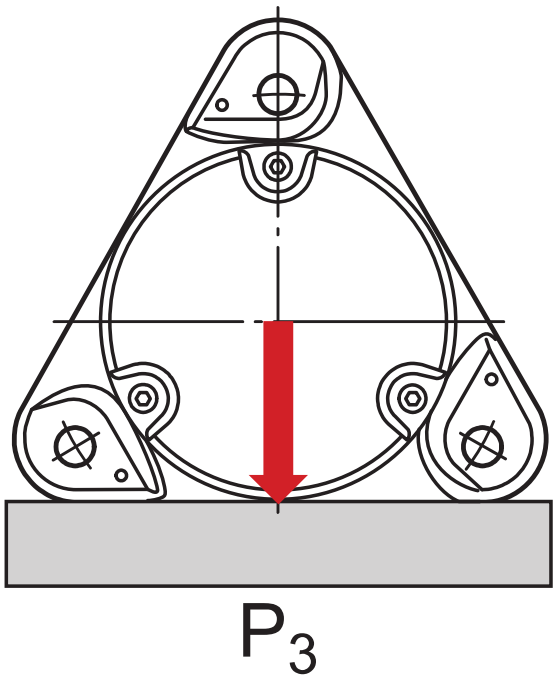


## Breaking loads

| | | |
|---|---|---|
| $P_1$ | 130 kN | Breaking load |
| $P_2$ | 110 kN | Breaking load |
| $P_3$ | 190 kN | Breaking load |

## Materials

| | |
|---|---|
| Housing | Cast iron |
| Corrosion protection | Paint - in accordance with ISO 12944-2, corrosivity category C2 |

## Mounting information

| | | |
|---|---|---|
| Size of cover bolt | | M6x20 |
| Recommended tightening torque for cover bolts | | 10 N·m |
| Recommended diameter of attachment bolts | G | 12 mm |
| Recommended tightening torque for attachment bolts | | 80 N·m |
| Initial grease fill, 20% | | 44 g |
| Initial grease fill, 40% | | 72 g |

## Included products

| | |
|---|---|
| Grease fitting | AH 1/8-27 PTF |

# Compatible products

## Component

| | |
|---|---|
| Double-lip seal | 2 x TFL 513 |

# More Information

## Designs and variants

- Standard housing design
- Housing variants
- Sealing solutions

## Product details

- Permissible misalignment
- Typical shaft-bearing combinations
- Locating/non-locating support
- Loads
- Temperature limits
- Permissible speed
- Lubrication
- Mounting
- Condition monitoring
- Associated products
- Ordering information
- Designation system

## Tools

- SKF Product select - Select and evaluate bearing
- SKF Product select - Combine bearing with housing
- SimPro Quick
- Tool and Accessory Selector for sleeves and shafts
- LubeSelect for SKF greases
- Drive-up Method Program
- Heater selection tool
- Oil Injection Method Program

# Terms of use

By accessing and using this website / app owned and published by AB SKF (publ.) (556007-3495 · Gothenburg) (“SKF”), you agree to the following terms and conditions:

**Warranty Disclaimer and Limitation of Liability**
Although every care has been taken to assure the accuracy of the information on this website / app, SKF provides this information "AS IS" and DISCLAIMS ALL WARRANTIES, EXPRESS OR IMPLIED, INCLUDING, BUT NOT LIMITED TO, IMPLIED WARRANTIES OF MERCHANTABILITY AND FITNESS FOR A PARTICULAR PURPOSE. You acknowledge that your use of this website / app is at your sole risk, that you assume full responsibility for all costs associated with use of this website / app, and that SKF shall not be liable for any direct, incidental, consequential, or indirect damages of any kind arising out of your access to, or use of the information or software made available on this website / app.

Any warranties and representations in this website / app for SKF products or services that you purchase or use will be subject to the agreed upon terms and conditions in the contract for such product or service.

Further, for non-SKF websites / apps that are referenced in our website / app or where a hyperlink appears, SKF makes no warranties concerning the accuracy or reliability of the information in these websites / apps and assumes no responsibility for material created or published by third parties contained therein. In addition, SKF does not warrant that this website / app or these other linked websites / apps are free from viruses or other harmful elements.

**Third Party Services**
When viewing YouTube content via the SKF website(s) (i.e. using YouTube API Services), you agree to be bound by the YouTube Terms of Service.

**Copyright**
Copyright in this website / app copyright of the information and software made available on this website / app rest with SKF or its licensors. All rights are reserved. All licensed material will reference the licensor that has granted SKF the right to use the material. The information and software made available on this website / app may not be reproduced, duplicated, copied, transferred, distributed, stored, modified, downloaded or otherwise exploited for any commercial use without the prior written approval of SKF. However, it may be reproduced, stored and downloaded for use by individuals without prior written approval of SKF. Under no circumstances may this information or software be supplied to third parties.

This website /app includes certain images used under license from Shutterstock, Inc.

**Trademarks and Patents**
All trademarks, brand names, and corporate logos displayed on the website / app are the property of SKF or its licensors, and may not be used in any way without prior written approval by SKF. All licensed trademarks published on this website / app reference the licensor that has granted SKF the right to use the trademark. Access to this website / app does not grant to the user any license under any patents owned by or licensed to SKF.

**Changes**
SKF reserves the right to make changes or additions to this website / app at any time.