Product Data Sheet
February 2017
00813-0100-4708, Rev BD

Rosemount™ 708 Wireless Acoustic Transmitter



- Improve energy efficiency and environmental compliance with acoustic monitoring of steam traps and pressure relief valves
- Gain instant visibility to all of your critical steam traps and PRVs through a non-intrusive, *Wireless*HART® monitoring system
- Backed by proven experience in wireless field instrumentation and expert technical support from Emerson™

Emerson's Wireless Solution

IEC 62591 (*Wireless*HART)... The industry standard

Self-organizing, adaptive mesh routing

- Know you are backed by Emerson's proven experience in Wireless field instrumentation and expert technical support
- The self-organizing, self-healing network manages multiple communication paths for any given device. If an obstruction is introduced into the network, data will continue to flow because the device already has other established paths.

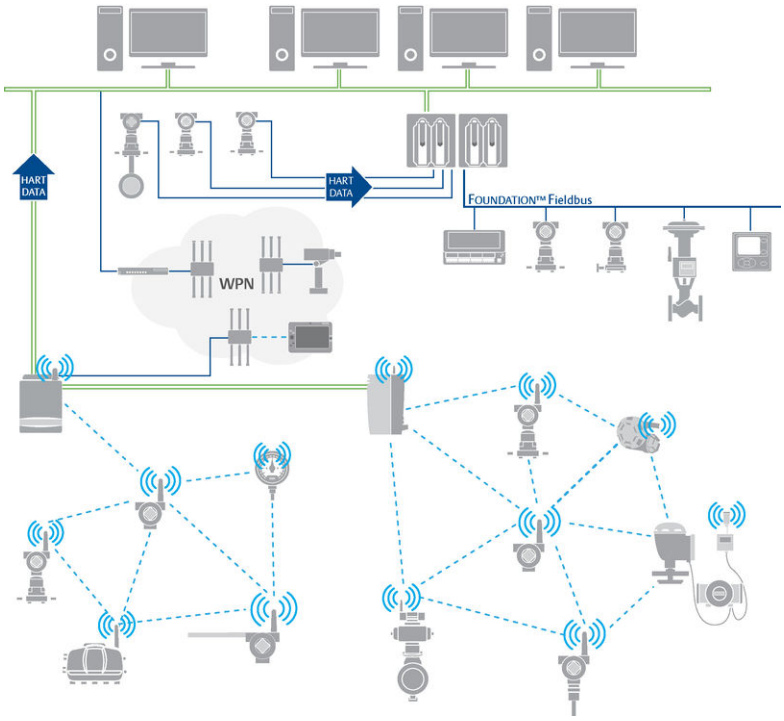

Reliable wireless architecture

- Standard IEEE 802.15.4 radios
- 2.4 GHz ISM band sliced into 15 radio-channels
- Time Synchronized Channel Hopping
- Direct sequence spread spectrum (DSSS) technology delivers high reliability in challenging radio environment

Emerson's Wireless

Seamless integration to all existing host systems

- Native integration into DeltaV™ and Ovation™ is transparent and seamless
- Gateways interface with existing host systems using industry standard protocols including OPC, Modbus® TCP/IP, Modbus RTU, and EtherNet/IP™

Layered security keeps your network safe

- Ensures data transmissions are received only by the wireless Gateway
- Network devices implement industry standard Encryption, Authentication, Verification, Anti-Jamming, and Key Management
- Third party security verification including Achilles and FIPS197- User based login and enforced password strength. Password strength monitoring, user based log in, password reset requirements, automatic lockout, password expiration requirements. Based on guidelines from ISA99.03.03 standard approved level two.

SmartPower™ solutions

- Optimized Emerson instrumentation, both hardware and software, to extend power module life
- SmartPower technologies enable predictable power life

Contents

Rosemount 708 Wireless Acoustic Transmitter 3
Ordering Information 4
Specifications 6
Product Certifications 8

Rosemount 708 Wireless Acoustic Transmitter

Ultrasonic acoustic event detection



- Reliably detects and transmits information about acoustic events such as leaks
- Transmitter output includes acoustic level (0 to 255 counts) and temperature (–40 to 260 °C)
- Transmitter communicates process variable and status information via the wireless network for integration into existing host systems

Monitor steam traps

- Steam Trap Monitoring application provides critical, real-time information on the condition of your monitored steam trap population
- Real-time monitoring provides instantaneous feedback for system maintenance and optimization

Monitor pressure relief valves or pressure safety valves



- Turbulence generated by a leaky valve can be detected using the acoustic transmitter
- Notification when release is occurring and when the release has stopped
- Emerson Wireless network provides timestamped information to the host
- Automated data enables reporting of a tamper-proof data log

Mounting flexibility

The wireless acoustic transmitter can be directly mounted to process piping without cutting pipes or changing pipe configurations allowing for a flexible, easy installation.

Reliable transmitter performance

The rugged and robust design of the transmitter ensures reliable performance in harsh environments.

Ordering Information

Table 1. Rosemount Product Ordering Information

The starred offerings (★) represent the most common options and should be selected for best delivery. The non-starred offerings are subject to additional delivery lead time.

Model	Product description	
708	Acoustic Transmitter	★
Output protocol		
X	Wireless	★
Measurement		
1	Steam Traps with Steam Trap Monitoring Software (order with 7001X)	★
2	Other measurements	★
Housing		
P	Engineered polymer	★
Waveguide configuration		
A1	Acoustic waveguide	★
Product certifications		
NA	No hazardous location approval	★
I1	ATEX Intrinsic Safety	★
I2	INMETRO Intrinsic Safety	★
I3	China Intrinsic Safety	★
I4	TIIS Intrinsic Safety	★
I5	USA Intrinsically Safe	★
I6	Canada Intrinsically Safe	★
I7	IECEx Intrinsic Safety	★
IM	EAC Intrinsically Safe	★
IP	Korea Intrinsically Safe	★
Mounting hardware		
NA00	No mounting hardware	★
HC01	Stainless steel mounting band, nominal pipe size 1/2- to 2 1/2-in.	★
HC02	Stainless steel mounting band, nominal pipe size 3- to 4-in.	★
HC03	Stainless steel mounting band, nominal pipe size 4- to 10-in.	★
HT01	High temperature stainless steel mounting hardware, nominal pipe size 1/2- to 1 1/4-in. (260 to 550 °C)	

Table 1. Rosemount Product Ordering Information

The starred offerings (★) represent the most common options and should be selected for best delivery. The non-starred offerings are subject to additional delivery lead time.

Wireless options (include with selected model number)

Extended product warranty		
WR3	3-year limited warranty	★
WR5	5-year limited warranty	★
Wireless update rate, operating frequency and protocol		
WA3	User configurable update rate, 2.4 GHz DSSS, IEC 62591 (*Wireless*HART)	★
Omni-directional wireless antenna and SmartPower solutions(1)		
WP5	Internal antenna, compatible with green power module (I.S. power module sold separately)	★
Configuration		
C1	Factory configure date, descriptor, message fields and wireless parameters	★
Typical model number: 708 X 1 P A1 NA HC01 WA3 WP5		

1. Power module must be shipped separately, order 701PGNKF.

Table 2. Spare Parts and Accessories

00708-9010-0001	High temperature mounting hardware	★

Specifications

Functional specifications

Output

IEC 62591 (*Wireless*HART) 2.4 GHz DSSS

Humidity limits

0–100 percent relative humidity

Transmit rate

User selectable 1 second to 60 minutes

Radio frequency power output from antenna

Internal (WP option) antenna:
Maximum of 10 mW (10 dBm) EIRP

Physical specifications

Material selection

Emerson provides a variety of Rosemount products with various product options and configurations including materials of construction that can be expected to perform well in a wide range of applications. The Rosemount product information presented is intended as a guide for the purchaser to make an appropriate selection for theapplication.Itisthepurchaser's sole responsibility to make a careful analysis of all process parameters (such as all chemical components, temperature, pressure, flow rate, abrasives, contaminants, etc.), when specifying product materials, options, and components for the particular application. is not in a position to evaluate or guarantee the compatibility of the process fluid or other process parameters with the product options, configuration, or materials of construction selected.

Electrical connections/power module

- Replaceable, non-rechargeable, Intrinsically Safe Lithium-Thionyl Chloride power module
- Ten-year power module life at reference conditions[1]

Field Communicator connections

Communication Terminals - Clips permanently fixed to power module

Materials of construction

Housing

PBT/PC

Cover O-ring

Silicone

Power module housing

PBT/PC

Wave guide

Machined 316L SST

Mounting

Transmitters are directly attached to process piping using two stainless steel mounting bands.High temperature mounting hardware should be used when process temperatures exceed 260 °C (500 °F).

Weight

Rosemount 708 with power module –1.31 lb (0.595 kg)
Rosemount 708 without power module –0.98 lb (0.445 kg)

Enclosure ratings

NEMA® 4X and IP66/67

Performance specifications

Vibration effect

Tested per the requirements of IEC60770-1 field or pipeline with high vibration level (10–60 Hz 0.21 mm displacement peak amplitude/60–2000 Hz 3 g).

Temperature limits

Ambient limit: –40 to 85 °C (–40 °F to 185 °F)
Storage limit: –40 to 85 °C (–40 °F to 185 °F)
Heat from the process is transferred to the transmitter housing. If the process temperature is high, the ambient temperature will need to be lower to account for heat transferred to the transmitter housing. (see Table 3 on page 7)

1. *Reference conditions are 70 °F (21 °C), transmit rate of once per minute, and routing data for three additional network devices.*

Table 3. Temperature Derating — Direct Mount

Process temperature (°C)	Max ambient (°C)
260	41
240	45
220	49
200	53
180	57
160	61
140	64
120	68
100	72
85	75

Table 4. High Temperature — High Temperature Mounting Option

Process temperature (°C)	Max ambient (°C)
550	41
520	45
490	47
460	49
430	51
400	53
370	56
340	58
310	60
280	62
260	63

Electro Magnetic Compatibility (EMC)

Meets all relevant requirements of EN 61326-2-3:2013

Wireless output specifications

Acoustic output

0 to 255 counts

Temperature output

–40 to 260 °C (–104 to 500 °F)

Product Certifications

Rev 2.1

European Union Directive Information

A copy of the EU Declaration of Conformity can be found at the end of the Quick Start Guide. The most recent revision of the EU Declaration of Conformity can be found at Emerson.com/Rosemount.

Telecommunication Compliance

All wireless devices require certification to ensure that they adhere to regulations regarding the use of the RF spectrum. Nearly every country requires this type of product certification. Emerson is working with governmental agencies around the world to supply fully compliant products and remove the risk of violating country directives or laws governing wireless device usage.

FCC and IC

This device complies with Part 15 of the FCC Rules. Operation is subject to the following conditions: This device may not cause harmful interference. This device must accept any interference received, including interference that may cause undesired operation. This device must be installed to ensure a minimum antenna separation distance of 20 cm from all persons.

Ordinary Location Certification

As standard, the transmitter has been examined and tested to determine that the design meets the basic electrical, mechanical, and fire protection requirements by a nationally recognized test laboratory (NRTL) as accredited by the Federal Occupational Safety and Health Administration (OSHA).

Installing in North America

The US National Electrical Code® (NEC) and the Canadian Electrical Code (CEC) permit the use of Division marked equipment in Zones and Zone marked equipment in Divisions. The markings must be suitable for the area classification, gas, and temperature class. This information is clearly defined in the respective codes.

USA

I5 U.S.A. Intrinsically Safe (IS)
Certificate: (FM) 3043245
Standards: FM Class 3600 – 1998, FM Class 3610 – 2010, FM Class 3810 – 2005, NEMA 250 – 2003, ANSI/IEC 60529 – 2004
Markings: IS CL I, DIV 1, GP A, B, C, D T4; CL 1, Zone 0 AEx ia IIC T4; T4(–40 °C ≤ T_a ≤ +70 °C) when installed per Rosemount drawing 00708-1000; Type 4X

Special Conditions for Safe Use (X):

1. The Rosemount 708 Wireless Acoustic Transmitter shall only be used with the 701PGNKF Rosemount SmartPower battery pack.
2. Potential Electrostatic charging Hazard – See instructions.

Canada

I6 Canada Intrinsically Safe
Certificate: (CSA) 2439890
Standards: CAN/CSA C22.2 No. 0-M91, CAN/CSA C22.2 No. 94-M91, CSA Std C22.2 No. 142-M1987, CSA Std C22.2 No. 157-92, CSA Std C22.2 No. 60529:05
Markings: I.S. CL I, DIV 1, GP A, B, C, D when installed per Rosemount drawing 00708-1001; T3C; Type 4X

Europe

I1 ATEX Intrinsic Safety
Certificate: Baseefa11ATEX0174X
Standards: EN 60079-0: 2012, EN 60079-11: 2012
Markings: ⟨Ex⟩ II 1 G Ex ia IIC T4 Ga, T4 (–40 °C ≤ T_a ≤ +70 °C)

Special Conditions for Safe Use (X):

1. The plastic enclosure of the Rosemount 708 may constitute a potential electrostatic ignition risk and must not be rubbed or cleaned with a dry cloth.
2. The Model 701PGNKF Power Module may be replaced in a hazardous area. The power module has a surface resistivity greater than 1GΩ and must be properly installed in the wireless device enclosure. Care must be taken during transportation to and from the point of installation to prevent electrostatic charge build-up.

International

I7 IECEx Intrinsic Safety
Certificate: IECEx BAS 11.0091X
Standards: IEC 60079-0:2011, IEC 60079-11:2011
Markings: Ex ia IIC T4 Ga, T4(–40 °C ≤ T_a ≤ +70 °C)

Special Condition for Safe Use (X):

1. The plastic enclosure of the Rosemount 708 may constitute a potential electrostatic ignition risk and must not be rubbed or cleaned with a dry cloth.

Brazil

I2 INMETRO Intrinsic Safety
Certificate: UL-BR 16.0128X
Standards: ABNT NBR IEC 60079-0:2008 + Errata 1:2011, ABNT NBR IEC 60079-11:2009
Markings: Ex ia IIC T4 Ga, T4(–40 °C ≤ T_a ≤ +70 °C)

Special Condition for Safe Use (X):

1. See certificate for special conditions.

China

I3 China Intrinsic Safety
Certificate: GYJ13.1445X
Standards: GB3836.1-2010, GB3836.4-2010, GB3836.20-2010
Markings: Ex ia IIC Ga T4,–40 ~ +70 °C

Special Condition for Safe Use (X):

1. See certificate for special conditions.

Japan

I4 TIIS Intrinsically Safe
Certificate: TC20395
Markings: Ex ia IIC T4 X (–20 ~ +60 °C)

EAC - Belarus, Kazakhstan, Russia

IM Technical Regulation Customs Union (EAC) Intrinsic Safety
Certificate: RU C-US.Gb05.B.00643
Markings: 0Ex ia IIC T4 Ga X
T4 (–40 °C ≤ T_a ≤ +70 °C)

Special Condition for Safe Use (X):

1. See certificate for special conditions.

Korea

IP Korea Intrinsic Safety
Certificate: 13-KB4BO-0145X
Markings: Ex ia IIC T4
T4 (–40 °C ≤ T_a ≤ +70 °C)

Special Condition for Safe Use (X):

1. See certificate for special conditions.

Dimensional Drawings

Figure 1. Rosemount 708 Direct Mount

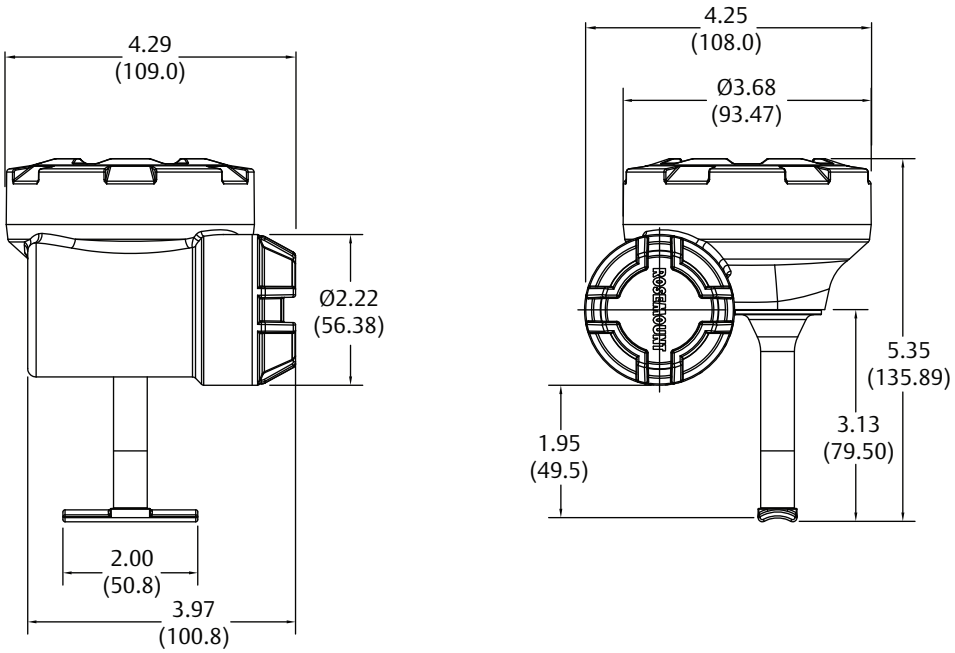

Dimensions are in inches (millimeters).

Figure 2. Rosemount 708 Acoustic Transmitter with High Temperature Standoff and Fastener Kit

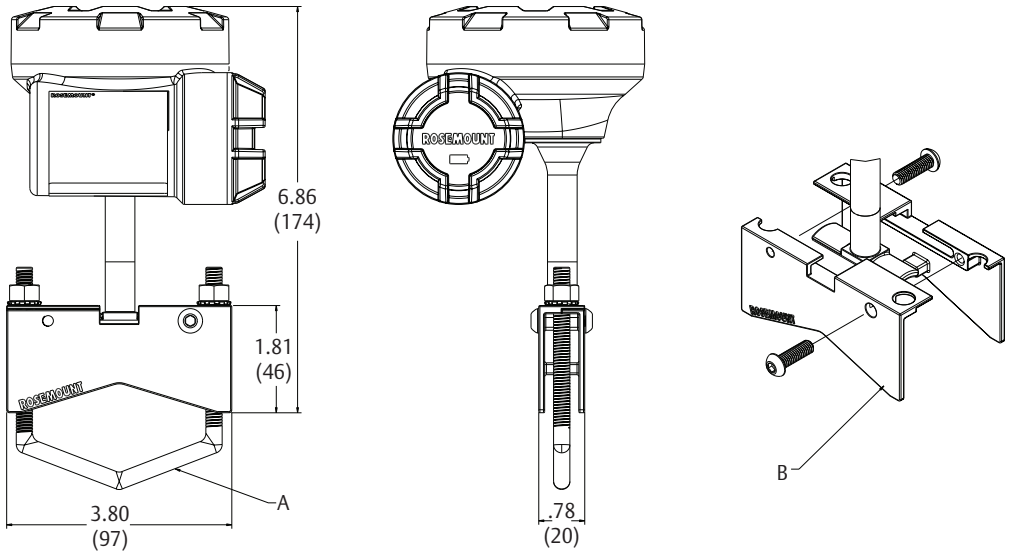

A. For nominal pipe sizes 0.5- to 1 1/4-in.
B. Bracket mounting
Dimensions are in inches (millimeters).

Global Headquarters

Emerson Automation Solutions
6021 Innovation Blvd.
Shakopee, MN 55379, USA
+1 800 999 9307 or +1 952 906 8888
+1 952 949 7001
RFQ.RMD-RCC@Emerson.com

North America Regional Office

Emerson Automation Solutions
8200 Market Blvd.
Chanhassen, MN 55317, USA
+1 800 999 9307 or +1 952 906 8888
+1 952 949 7001
RMT-NA.RCCRFQ@Emerson.com

Latin America Regional Office

Emerson Automation Solutions
1300 Concord Terrace, Suite 400
Sunrise, FL 33323, USA
+1 954 846 5030
+1 954 846 5121
RFQ.RMD-RCC@Emerson.com

Europe Regional Office

Emerson Automation Solutions Europe GmbH
Neuhofstrasse 19a P.O. Box 1046
CH 6340 Baar
Switzerland
+41 (0) 41 768 6111
+41 (0) 41 768 6300
RFQ.RMD-RCC@Emerson.com

Asia Pacific Regional Office

Emerson Automation Solutions Asia Pacific Pte Ltd
1 Pandan Crescent
Singapore 128461
+65 6777 8211
+65 6777 0947
Enquiries@AP.Emerson.com

Middle East and Africa Regional Office

Emerson Automation Solutions
Emerson FZE P.O. Box 17033
Jebel Ali Free Zone - South 2
Dubai, United Arab Emirates
+971 4 8118100
+971 4 8865465
RFQ.RMTMEA@Emerson.com

Linkedin.com/company/Emerson-Automation-Solutions

Twitter.com/Rosemount_News

Facebook.com/Rosemount

Youtube.com/user/RosemountMeasurement

Google.com/+RosemountMeasurement

Standard Terms and Conditions of Sale can be found on the Terms and Conditions of Sale page.
The Emerson logo is a trademark and service mark of Emerson Electric Co.
Ovation, SmartPower, SteamLogic, DeltaV, Rosemount, and Rosemount logotype are trademarks of Emerson.
*Wireless*HART is a registered trademark of the FieldComm Group.
Modbus is a registered trademark of Gould Inc.
NEMA is a registered trademark and service mark of the National Electrical Manufacturers Association.
National Electrical Code is a registered trademark of National Fire Protection Association, Inc.
All other marks are the property of their respective owners.
© 2017 Emerson. All rights reserved.