Micro timers	Many different installation options (DC)	HK07 / AHK07

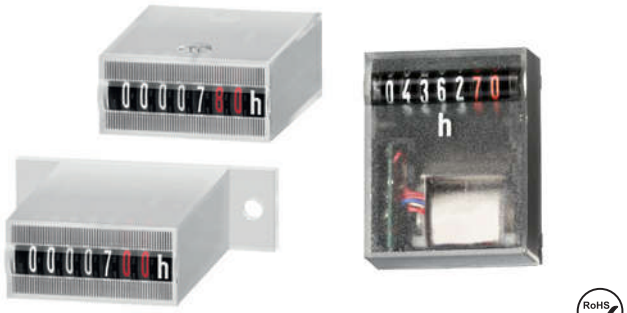

The micro timers of the HK07 and AHK07 families offer a particularly large number of variants and can be used in many different applications thanks to their wide voltage range from 4.5 to 35 V DC.

Available as panel, base and PCB mount versions, they can be used in many different fields of application. Thanks to their encapsulated housing, these non-resettable counters are extremely tamper-proof.

Characteristics

- 7-digit micro hour meter.
- High shock and impact resistance.
- Low power consumption; suitable for battery operation.
- Small dimensions – magnified large figures.
- Panel-mount counter with integrated spring clip.
- PCB-mount counter.
- Machine-solderable and wash-proof.
- Protection IP65.

Benefits

- Wide voltage range 4.5 ... 35 V DC.
- Count retention in case of power failure.
- Long service life.

Applications

General time measurement, maintenance intervals for measuring instruments (respiration units, oxygen, dialysis), small appliances, UV lamps, display panels in vehicles.

Type series

Fig.	*Mounting options*	*Display*	*Protection*	*El. connection*	*Housing*	*Height of fig.*	*Type*
1)	Panel mount with latch	front side	IP65, front side	flying leads	plastic	4 mm [0.16“]	**HK07.20**
2)	PCB mount, lying	on the top	IP65, front side/on rear	solder pins	plastic	4 mm [0.16“]	**HK07.90**
4)	PCB mount, upright	front side	IP65, front side/on rear	solder pins	plastic	4 mm [0.16“]	**HK07.92**
5)	Base mount, upright	front side	IP40	flying leads	plastic	4 mm [0.16“]	**AHK07.00**

Mounting options and position of the display

1) Panel mount
display front side

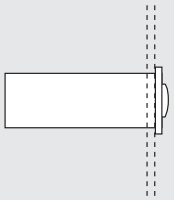

2) PCB mount, lying
display on the top



3) PCB mount, upright
display front side

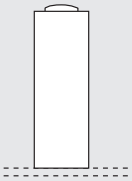

4) Base mount, upright
display front side

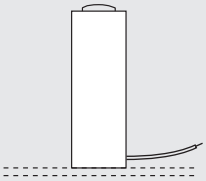

Optional: PCB mount, hanging
display front side



© Fritz Kübler GmbH, subject to errors and changes. 03/2023

Micro timers | Many different installation options (DC) | HK07 / AHK07

Accessories

		Type / size	Description		Order no.
Gasket counter		**32 x 15 [1.26 x 0.59]**	for cut-out 27 x 13 mm, suitable for HK07.20		**N511058**

Technical data

Electrical connection	panel mount	flying leads, AWG 22 (red +, black -) approx. 150 mm [5.91"], 6 mm [0.24"] stripped wire ends, tinned
	PCB mount	solder pins 0.4 x 1.2 mm [0.016 x 0.047"], tinned
Power consumption (every 36 s with a pulse length of 32 ms)		
	at U_B = 5 V DC	typ. 82 mW
	at U_B = 12 V DC	typ. 135 mW
	at U_B = 24 V DC	typ. 135 mW
		max. 170 mW
Rated voltage		4.5 ... 35 V DC
Residual ripple		< 1 %
Current consumption		< 1.5 mA (average)
On time		100 %
Pulse duration		32 ms; every 36 s = 0.01 h On-times < 36 s will not be counted
Number of digits		7: 99999.99 h
Accuracy		22.5 ppm at 25 °C [77 °F]
Height of figures		1.2 x 4.0 mm [0.047 x 0.16"]
Color of figures		white and red on black
Reset		no reset
Operating temperature		-10 °C ... +60 °C [+14 °F ... +140 °F] (non-condensing)
Mounting position		horizontal, other on request
Solderable and washproof versions		HK07.90, HK07.91, HK07.92
Soldering temperature		265 °C [+509 °F], 3 s
Protection		up to IP65, depending on kind of type
Housing		plastic PC (Polycarbonate)
Weight		15 ... 18 g [0.53 ... 0.63 oz]

Options

HK07.20 flat pin 0.8 x 2.8 mm [0.031 x 0.11"] (others on request)

Approvals

CE compliant in accordance with

EMC Directive	2014/30/EU
RoHS Directive	2011/65/EU

UKCA compliant in accordance with

EMC Regulations	S.I. 2016/1091
RoHS Regulations	S.I. 2012/3032

Panel mount with latch / display front side
Type HK07.20



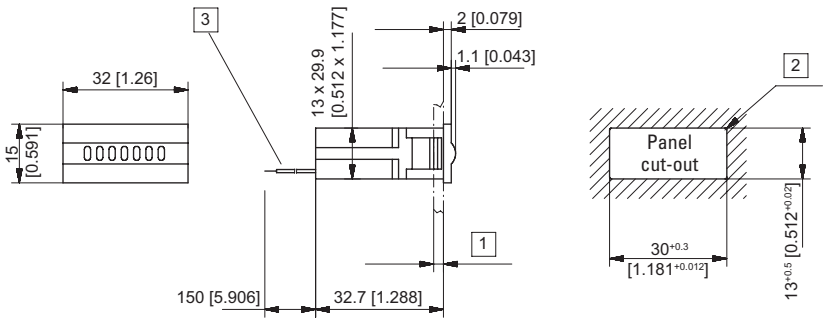

1 1.2 ... 3 [0.047 x 0.12"] 2 R_{max} 0.5 3 Flying leads (red+ / black–)

Type		Display	Art. no. 4.5 ... 35 V DC
HK07.20		7 digits	**3.100.200.383** 1)
HK07.20.35	with flat pins	7 digits	**3.107.200.383** 1)

Dimensions in mm [inch]

1) Stock types

© Fritz Kübler GmbH, subject to errors and changes. 03/2023

Micro timers | Many different installation options (DC) | HK07 / AHK07

PCB mount, lying / display on the top
Type HK07.90



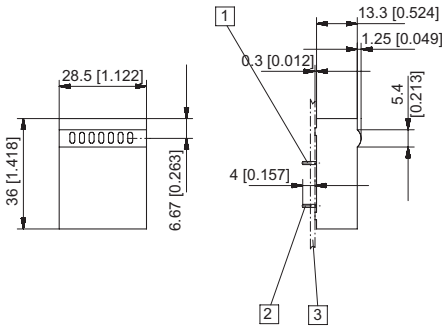

Punching diagram for PCB (component side)

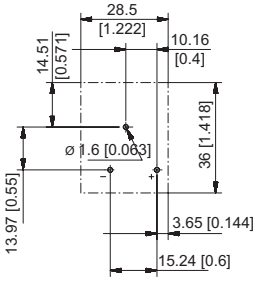

1 Mounting pin without el. function 0.4 x 1.2 [0.016 x 0.047]
2 Electrical connection 0.4 x 1.2 [0.016 x 0.047] 3 PCB

Type	Display	Art. no. 4.5 ... 35 V DC
HK07.90	7 digits	**3.100.900.383**

PCB mount, upright / display front side
Type HK07.92



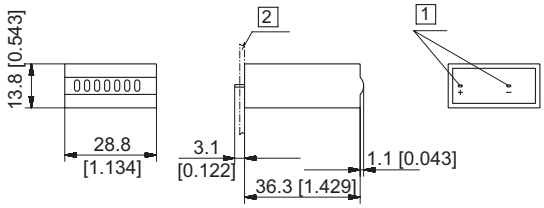

Punching diagram for PCB (component side)

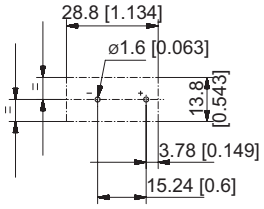

1 Electrical connection 0.4 x 1.2 [0.016 x 0.047] 2 PCB

Type	Display	Art. no. 4.5 ... 35 V DC
HK07.92	7 digits	**3.100.920.383**

Base mount, upright / display front side
Type AHK07.00



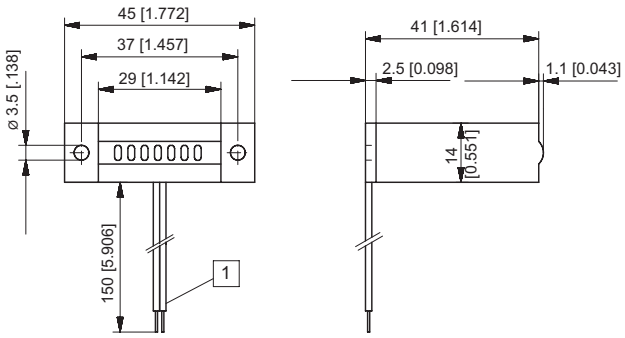

1 Flying leads (red+ / black–)

Type	Display	Art. no. 4.5 ... 35 V DC
AHK07.00	7 digits	**3.100.000.383** [1)]

Dimensions in mm [inch]

1) Stock types

© Fritz Kübler GmbH, subject to errors and changes. 03/2023