Fastening Technology

SCHLAUCHSCHELLE BMF GR. 5
Order Code: BAM00N7

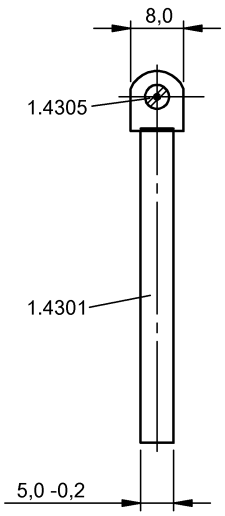

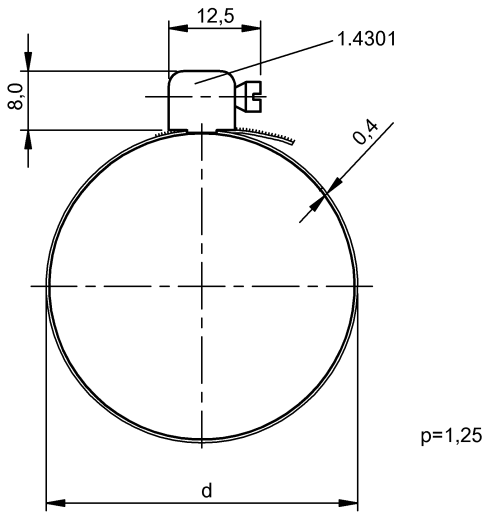

Basic features

Principle of operation	Hose clamp
Scope of delivery	Hose clamp
Use	for magnetic sensors BMF
Version	Ø 48-59 mm

Material

Material	Stainless steel (1.4301)

Mechanical data

Mounting part	Screws, clamps
Tightening torque clamping screw	1.2 Nm