KT5007

Capacitive touch sensor

KTRDHOK-RANKG/AM/AS/0,3M

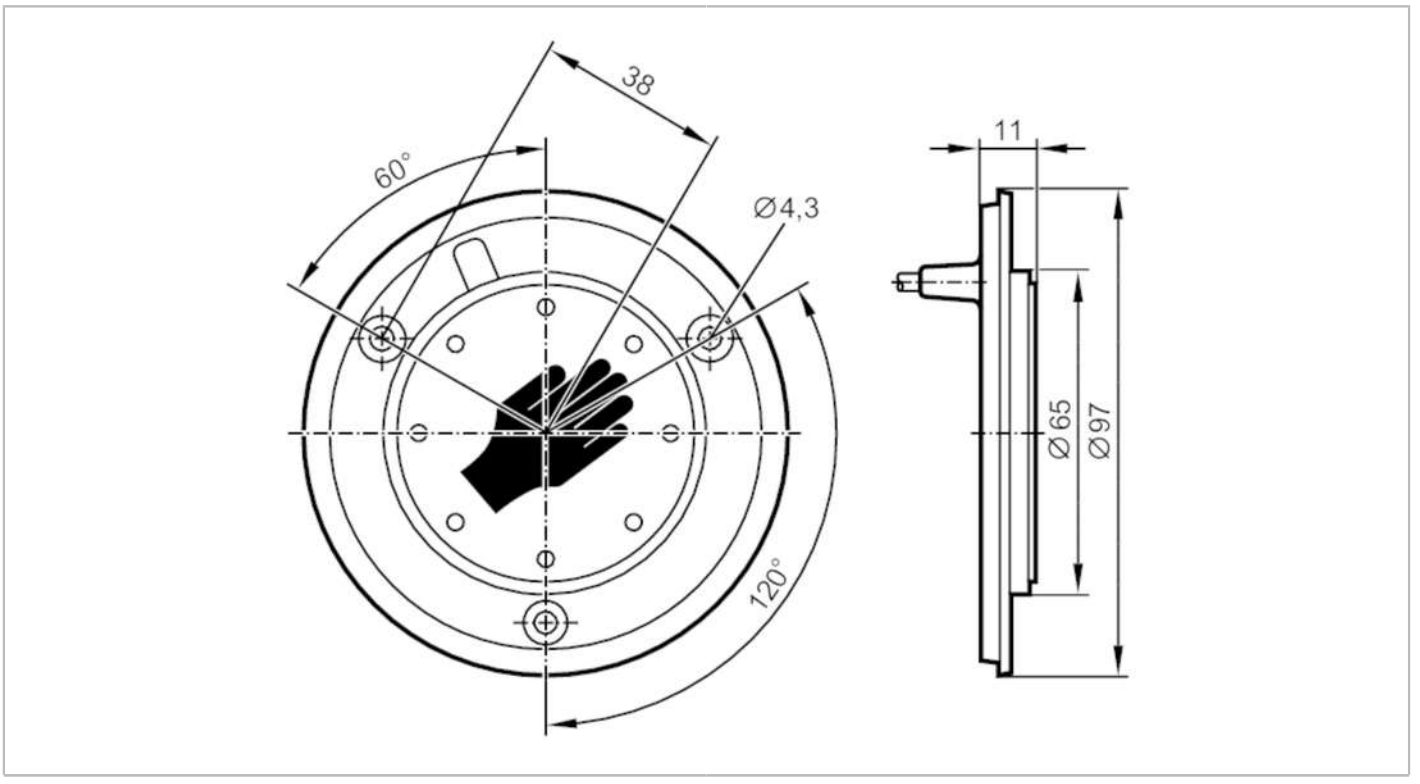

Product characteristics		
Electrical design		NPN
Output function		normally open
Dimensions	[mm]	Ø 96.9 / L = 11
Application		
Operating principle		dynamic
Electrical data		
Operating voltage	[V]	12...30 DC
Current consumption	[mA]	30
Protection class		III
Reverse polarity protection		yes
Max. power-on delay time	[ms]	500
Outputs		
Electrical design		NPN
Output function		normally open
Permanent current rating of switching output DC	[mA]	200
Short-circuit protection		yes
Overload protection		yes
Length of output signal	[ms]	300
Response times		
Response time	[ms]	35

KT5007

Capacitive touch sensor

KTRDHOK-RANKG/AM/AS/0,3M

Operating conditions			
Ambient temperature	[°C]	-40...85	
Protection		IP 67; IP 69K; (on the front)	
Tests / approvals			
MTTF	[years]	418	
Mechanical data			
Weight	[g]	115.5	
Dimensions	[mm]	Ø 96.9 / L = 11	
Materials		active face: PA Grilamid TR 90UV transparent; housing: PC/ABS black	
Displays / operating elements			
Display		switching status	8 x LED, red
		operation	8 x LED, green
Accessories			
Accessories (optional)		surround in different colours	
Remarks			
Pack quantity		1 pcs.	

Electrical connection - plug

Cable: 0.3 m, PUR

Connector: 1 x M8; coding: A

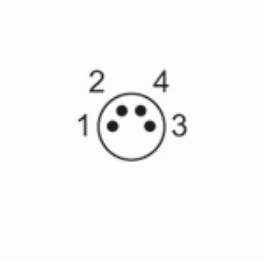

Connection

