MINISTART
Softstarter
BI 9025, BL 9025

0231843



BI 9025 up to 15 kW



BL 9025 up to 11 kW

- Softstart and softstop function
- 2-phase control
- For motors up to 15 kW at 3 AC 400 V
- Acceleration and deceleration time resp. starting and switch-off torque are separately adjustable
- Wide input voltage range of the power semiconductors
- Galvanic isolation of control input with wide voltage range up to AC/DC 480 V control input
- 3 auxiliary voltages at the device up to AC 230 V
- Integrated overtemperature monitoring
- LED indication
- According to EN 60 947-4-2
- 90 mm width

Additional Information about this topic

For motors up to 5.5 kW we recommend the softstarter BA 9018 or BA 9019.

Approvals and Marking

CE

Applications

- Motor with gear, belt or chain drive
- Fans, pumps, conveyor systems, compressors
- Packaging machines, door-drives
- Start current limiting on 3-phase motors

Function Diagram

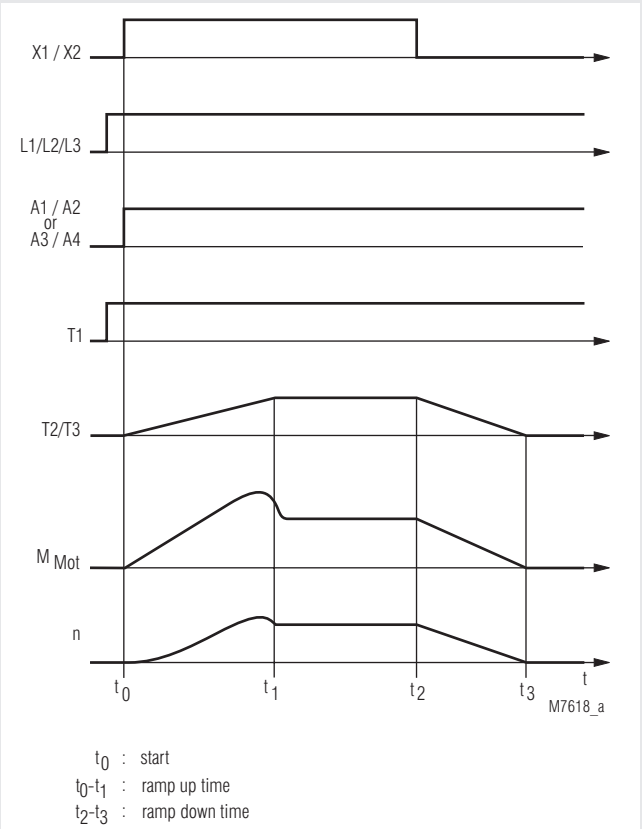

t_0 : start
t_0-t_1 : ramp up time
t_2-t_3 : ramp down time

Function

Softstarters are electronic devices designed to enable 1-phase or 3-phase induction motors to start smoothly. The devices slowly ramps up the current on two phases, therefore allowing the motor torque to build up slowly. This reduces the mechanical stress on the machine and prevents damage to conveyed material.
When the motor is up to full speed the semiconcutors in the device are bridged to prevent internal power losses and heat build up. In addition the device allows a softstop function prolonging the stop time of the motor, preventing high counter torques from abruptly stopping the motor.

Block Diagram

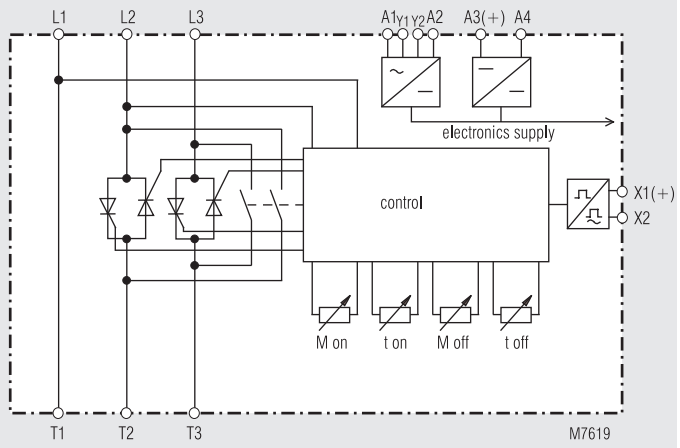

Indication

green LED:	on, when supply connected
yellow LED:	- on, when semiconductors bridged - flashing during ramp up or down
red LED:	Continuously on: Temperature fault Flashing: Attention: Phase reversal

Notes

Variation of speed is not possible with this device. Without load a softstart cannot be achieved. It is recommended that the softstart is protected by superfast semiconductor fuses rated as per the current rating of the soft-start or motor. However, standard line and motor protection is acceptable, but for high starting frequencies motor winding temperature monitoring is recommended.
The softstarter must not be operated with capacitive load e.g. power factor compensation on the output.

Technical Data

Nominal voltage: 3 AC 200 V - 15 % ... 480 V + 15 %
Nominal frequency: 50 / 60 Hz

	BI 9025	BL 9025
Width:	90 mm	90 mm
Nominal motor power P_N at		
480 V:	18.5 kW	15 kW
400 V:	**15 kW**	**11 kW**
200 V:	7.5 kW	5.5 kW
Nominal current I_N	32 A	25 A
Switching frequency at 3 x I_N, 10 s, ϑ_u = 45°C:	30 / h	10 / h
Time between 2 starts	min.110 s	min. 350 s

Min. motor power: approx. 0.1 P_N
Start torque: 30 ... 80 %
Ramp time: 1 ... 10 s
Deceleration torque: 30 ... 80 %
Deceleration time: 1 ... 20 s
Recovery time: 200 ms
Auxiliary voltage:
A1/A2, AC 115 V +10%, -15%: bridge A1 - Y1, bridge A2 - Y2
A1/A2, AC 230 V +10%, -15%: bridge Y1 - Y2
A3/A4, DC 24 V +10%, -15%: polarity protected
Power consumption: 3 W
Residual ripple: 5 %
Semiconductor fuse: 50 A superfast

Control Input

Voltage range X1/X2: AC/DC 24 - 480 V
Softstart: > 20 V
Softstop: < 5 V

General Data

Temperature range: 0 ... + 40°C
It is possible to operate the unit at 40°C ... 60°C, the number of starts per hour must then be reduced by 1.5 % / °C temperature increase.
Storage temperature: - 25 ... + 75°C
Usage category: according to EN 60 947-4-2, AC-53 b
Clearance and creepage distances
rated impuls voltage / pollution degree
Control voltage to auxiliary voltage, motor voltage: 6 kV / 2 IEC 60 664-1
Auxiliary voltage to motor voltage: 4 kV / 2 IEC 60 664-1

Technical Data

EMC
Electrostatic discharge: 8 kV (air) IEC/EN 61 000-4-2
HF-irradiation: 10 V/m IEC/EN 61 000-4-3
Fast transients: 2 kV IEC/EN 61 000-4-4
Surge voltages between
wire for power supply: 1 kV IEC/EN 61 000-4-5
between wire and ground: 2 kV IEC/EN 61 000-4-5
Degree of protection
Housing: IP 40 IEC/EN 60 529
Terminals: IP 20 IEC/EN 60 529
Vibration resistance: Amplitude 0.35 mm IEC/EN 60 068-1
frequency: 10 ... 55 Hz
Climate resistance: 0 / 055 / 04 IEC/EN 60 068-1
Wire connection
Load terminals: 1 x 10 mm² solid
1 x 6 mm² stranded ferruled
Control terminals: 1 x 4 mm² solid or
1 x 2.5 mm² stranded ferruled (isolated)
or
2 x 1.5 mm² stranded ferruled (isolated)
DIN 46 228-1/-2/-3/-4 or
2 x 2.5 mm² stranded ferruled
DIN 46 228-1/-2/-3
Wire fixing
Load terminals: Plus-minus terminal screws M4
box terminals with wire protection
Control terminals: Plus-minus terminal screws M3.5
box terminals with wire protection
Mounting: DIN rail mounting IEC/EN 60 715
Weight
BI 9025: 870 g
BL 9025: 835 g

Dimensions

Width x height x depth: 90 x 85 x 121 mm

Standard Type

BL 9025 3 AC 200 ... 480 V 50/60 Hz 11 kW
Article number: 0050957
- Nominal voltage: 3 AC 200 ... 480 V
- Nominal motor power at AC 400 V: 11 kW
- Width: 90 mm

Odering Example

BI 9025 3 AC 200 ... 480 V 50/60 Hz 15 kW

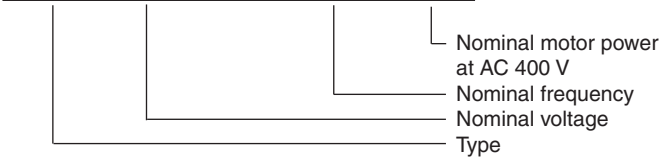

Control Input

If a voltage of more than 20 V is connected to terminals X1/X2, the device begins with softstart. If the voltage falls lower than 5 V the device will softstop.

Adjustment Facilities

Potentiometer	Description	Initial setting
M_{on}	Starting voltage	fully anti-clockwise
t_{on}	Ramp-up time	fully clockwise
M_{off}	Deceleration torque	fully clockwise
t_{off}	Deceleration time	fully clockwise

Set-up Procedure

Set potentiometer "M_{on}" to minimum (fully anti-clockwise).
Set potentiometer "M_{off}" to maximum (fully clockwise).
Set potentiometer "t_{on}" to maximum (fully clockwise).
Set potentiometer "t_{off}" to maximum (fully clockwise).
Start the motor and turn potentiometer "M_{on}" up until the motor starts to turn without excessive humming.
Stop the motor and restart.
Adjust potentiometer "t_{on}" to give the desired ramp time.
Stop and restart the motor.
Adjust potentiometer "M_{off}" until the motor starts to visibly slow down at the initation of the softstop cycle.
Stop and restart the motor.
Adjust potentiometer "t_{off}" to give the desired deceleration time.
Stop and restart the motor, readjusting the potentiometers until the desired starting/stopping characteristics are achieved.
During softstop the device must be connected to the 3-phase system.

- **Attention:** If the ramp-up time is adjusted to short, the internal bridging contact closes before the motor is on full speed. This may damage the bridging contactor or bridging relay.

Temperature Monitoring

BH/BL/BI 9025 features overtemperature monitoring of its internal power semiconductors. When the safe running temperature is exceeded the power semiconductors will turn off and a red LED on the front of the unit will illuminate. BI/BL 9025 can be reset after the semiconductors have cooled down by momentarily removing the auxiliary supply voltage. An LED indicates the fault (see fault detection).

Safety Instructions

- Never clear a fault when the device is switched on
- **Attention:** This device can be started by potential-free contact, while connected directly to the mains without contactor (see application example). Please note, that even if the motor is at rest, it is not physically separated from the mains. Because of this the motor be disconnected from the mains via the corresponding manual motor starter.
- The user must ensure that the device and the necessary components are mounted and connected according to the locally applicable regulations and technical standards.
- Adjustments may only be carried out by qualified specialist staff and the applicable safety rules must be observed.

Connection Example

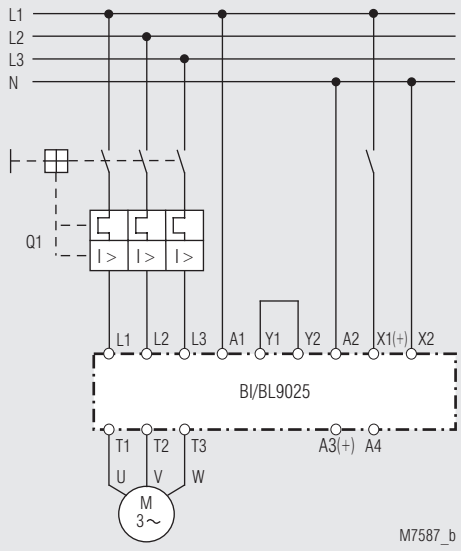

Softstart and softstop
Phase: 3 AC 400 V