Y-bearing flanged units with pressed steel housing

d 12–50 mm

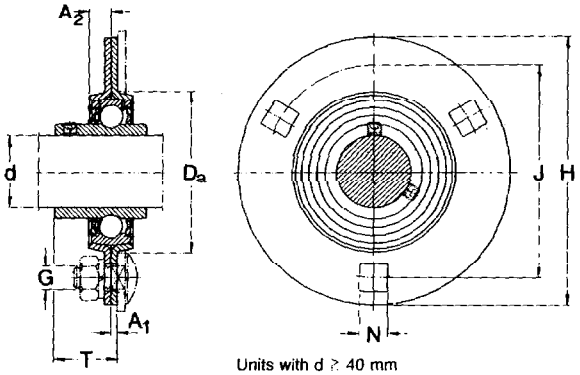

Units with d ≥ 40 mm have 4 bolt holes

Dimensions									Permissible housing load	Mass	Designations Unit[1]	Housing	Y-bearing
d	A_1	A_2	D_a	H	J	N	G	T	radial				
mm									N	kg	–		
12	2	7	49	81	63	7,1	6	24,1	2 500	0,26	**PF 12 FM**	PF 40	YET 203/12
								17,9	2 500	0,25	**PF 12 TF**	PF 40	YAR 203/12-2F
15	2	7	49	81	63	7,1	6	24,1	2 500	0,25	**PF 15 FM**	PF 40	YET 203/15
								17,9	2 500	0,23	**PF 15 TF**	PF 40	YAR 203/15-2F
17	2	7	49	81	63	7,1	6	24,1	2 500	0,24	**PF 17 FM**	PF 40	YET 203
								25,4	2 500	0,26	**PF 17 WM**	PF 40	YEL 203
								17,9	2 500	0,22	**PF 17 TF**	PF 40	YAR 203-2F
20	2	8	55	91	71,5	8,7	8	25,5	3 300	0,32	**PF 20 FM**	PF 47	YET 204
								28,6	3 300	0,35	**PF 20 WM**	PF 47	YEL 204
								20,3	3 300	0,30	**PF 20 TF**	PF 47	YAR 204-2F
								22,5	3 300	0,30	**PF 20 K**	PF 47	362004 ATN
25	2	9	60	95	76	8,7	8	25,5	3 600	0,36	**PF 25 FM**	PF 52	YET 205
								28,9	3 600	0,41	**PF 25 WM**	PF 52	YEL 205
								21,8	3 600	0,35	**PF 25 TF**	PF 52	YAR 205-2F
								22,5	3 600	0,35	**PF 25 K**	PF 52	362005 ATN
30	2,5	9,5	71	112	90.5	10,5	10	29,2	5 000	0,58	**PF 30 FM**	PF 62	YET 206
								32,6	5 000	0,64	**PF 30 WM**	PF 62	YEL 206
								24,7	5 000	0,56	**PF 30 TF**	PF 62	YAR 206-2F
								25,5	5 000	0,55	**PF 30 K**	PF 62	362006 ATN
35	2,5	10	81	122	100	11	10	31,9	6 500	0,77	**PF 35 FM**	PF 72	YET 207
								34,8	6 500	0,84	**PF 35 WM**	PF 72	YEL 207
								27,9	6 500	0,70	**PF 35 TF**	PF 72	YAR 207-2F
								27	6 500	0,69	**PF 35 K**	PF 72	362007 A
40	3,5	10	91	148	119	13,5	12	36,2	7 500	1,30	**PF 40 FM**	PF 80	YET 208
								38,4	7 500	1,35	**PF 40 WM**	PF 80	YEL 208
								33,7	7 500	1,20	**PF 40 TF**	PF 80	YAR 208-2F
								30,5	7 500	1,20	**PF 40 K**	PF 80	362008 A

[1] The units PF-WM are also available with flingers or flocked flingers; they then carry the suffixes F or L, e.g. PF 17 WL.
The units PF-TF are also available with flocked flingers or without flingers; they then carry the suffixes L or M, e.g. PF 12 TL or PF 12 TM

Y-bearing flanged units with pressed steel housing for inch shafts

d 5/8–1 11/16 in

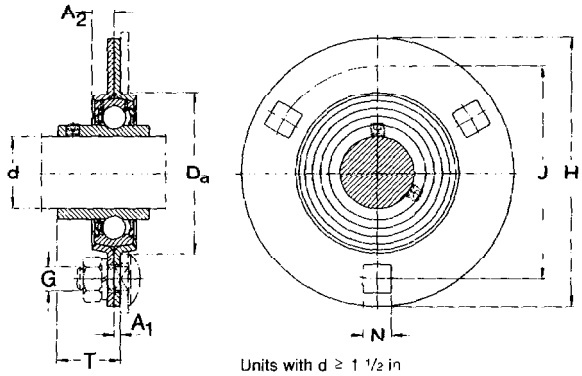

Units with d ≥ 1 1/2 in have 4 bolt holes

Dimensions									Permissible housing load	Mass	Designations Unit[1]	Housing	Y-bearing
d	A_1	A_2	D_a	H	J	N	G	T	radial				
in	mm								N	kg	–		
5/8	2	7	49	81	63	7,1	6	24,1	2 500	0,25	**PF 5/8 FM**	PF 40	YET 203-010
								25,4	2 500	0,26	**PF 5/8 WM**	PF 40	YEL 203-010
								17,9	2 500	0,22	**PF 5/8 TF**	PF 40	YAR 203-010-2F
11/16	2	7	49	81	63	7,1	6	24,1	2 500	0,24	**PF 11/16 FM**	PF 40	YET 203-011
								25,4	2 500	0,25	**PF 11/16 WM**	PF 40	YEL 203-011
								17,9	2 500	0,22	**PF 11/16 TF**	PF 40	YAR 203-011-2F
3/4	2	8	55	91	71,5	8,7	8	25,5	3 300	0,33	**PF 3/4 FM**	PF 47	YET 204-012
								28,6	3 300	0,35	**PF 3/4 WM**	PF 47	YEL 204-012
								20,3	3 300	0,30	**PF 3/4 TF**	PF 47	YAR 204-012-2F
13/16	2	9	60	95	76	8,7	8	25,5	3 600	0,40	**PF 13/16 FM**	PF 52	YET 205-013
								28,9	3 600	0,46	**PF 13/16 WM**	PF 52	YEL 205-013
								21,8	3 600	0,39	**PF 13/16 TF**	PF 52	YAR 205-013-2F
7/8	2	9	60	95	76	8,7	8	25,5	3 600	0,39	**PF 7/8 FM**	PF 52	YET 205-014
								28,9	3 600	0,44	**PF 7/8 WM**	PF 52	YEL 205-014
								21,8	3 600	0,38	**PF 7/8 TF**	PF 52	YAR 205-014-2F
15/16	2	9	60	95	76	8,7	8	25,5	3 600	0,38	**PF 15/16 FM**	PF 52	YET 205-015
								28,9	3 600	0,42	**PF 15/16 WM**	PF 52	YEL 205-015
								21,8	3 600	0,36	**PF 15/16 TF**	PF 52	YAR 205-015-2F
1	2	9	60	95	76	8,7	8	25,5	3 600	0,36	**PF 1. FM**	PF 52	YET 205-100
								28,9	3 600	0,40	**PF 1. WM**	PF 52	YEL 205-100
								21,8	3 600	0,35	**PF 1. TF**	PF 52	YAR 205-100-2F
1 1/8	2,5	9,5	71	112	90,5	10,5	10	29,2	5 000	0,60	**PF 1.1/8 FM**	PF 62	YET 206-102
								32,6	5 000	0,65	**PF 1.1/8 WM**	PF 62	YEL 206-102
								24,7	5 000	0,58	**PF 1.1/8 TF**	PF 62	YAR 206-102-2F
1 3/16	2,5	9,5	71	112	90,5	10,5	10	29,2	5 000	0,58	**PF 1.3/16 FM**	PF 62	YET 206-103
								32,6	5 000	0,63	**PF 1.3/16 WM**	PF 62	YEL 206-103
								24,7	5 000	0,55	**PF 1.3/16 TF**	PF 62	YAR 206-103-2F

[1] The units PF-WM are also available with flingers or flocked flingers; they then carry the suffixes F or L, e.g. PF 5/8 WF, PF 5/8 WL
The units PF-TF are also available with flocked flingers or without flingers; they then carry the suffixes L or M, e.g. PF 5/8 TL or PF 5/8 TM