DATA SHEET

Type 5404

bürkert
FLUID CONTROL SYSTEMS









Servo-assisted 2/2-way piston valve

- Servo-assisted piston valve with an orifice up to DN 50
- Explosion proof versions for Cat. 2
- Suitable for gas and steam applications up to 180°C
- Relief valves for compressors

Product variants described in the data sheet may differ from the product presentation and description.

Can be combined with



Type 2518 ▸
Cable Plug
DIN EN 175301-803 - Form A

Type description

The 5404 valve is a servo-assisted piston valve available in NC and NO versions. A minimum differential pressure is required for the valve switching function. The solenoid coils are moulded with high-quality epoxy resin. In combination with a plug to DIN EN 175301-803 Form A, the valves satisfy degree of protection IP65. The cable plug is not included and must be ordered separately.

DTS 1000011017 EN Version: W Status: RL (released | freigegeben | validé) printed: 09.11.2021

© Christian Bürkert GmbH & Co. KG, Subject to alteration

Visit product website ▸

Table of contents

1. General technical data 4

2. Circuit functions 5

3. Materials 5

3.1. Chemical Resistance Chart – Bürkert resistApp....5
3.2. Standard version....5
DN 12, Circuit function A....5
DN 25, Circuit function B....6
DN 32, Circuit function A....6
3.3. Steam version NA07....7
DN 13, Circuit function A....7
DN 32, Circuit function A, flange body....7
3.4. High pressure version MX13....8
DN 12, Circuit function A....8
3.5. Discharge valve for compressor systems CF05....8
DN 12, Circuit function B....8

4. Dimensions 9

4.1. Standard version....9
Threaded version DN 12....9
Threaded version DN 20 and DN 25....9
Threaded version DN 32 and DN 50....10
4.2. Steam version NA07....11
Threaded version DN 13....11
Threaded version DN 20, DN 25....11
Flange version DN 25....12
Threaded version DN 32 and DN 40....12
Flange version DN 32 and DN 40....13
4.3. High pressure version MX13....14
4.4. Discharge valve for compressor systems CF05....14
Plug version with ventilation....14
4.5. ATEX/IECEx version....15
Cable version....15
Terminal box....15

5. Performance specifications 16

5.1. Temperature/duty cycle derating diagram for steam version NA07....16
5.2. Characteristic values of intermittent operation....16

6. Product accessories 16

6.1. Cable glands for ATEX/IECEx terminal box....16
6.2. Special tool to turn the junction box....17

DTS 1000011017 EN Version: W Status: RL (released | freigegeben | validé) printed: 09.11.2021

7. Ordering information 17

7.1. Bürkert eShop – Easy ordering and quick delivery 17
7.2. Bürkert product filter 17
7.3. Ordering chart 18
Standard version DN 12…DN 25 18
Standard version DN 32…DN 50 18
Steam version NA07, DN 13…DN 25 19
Steam version NA07, DN 32…DN 40 19
High pressure version MX13 20
Discharge valve for compressor systems CF05 20
ATEX/IECEx version with 3-meter cable 21
ATEX/IECEx terminal box 21
7.4. Ordering chart accessories 22
Cable plug Type 2513, Form A according to DIN EN 175301-803 22
Cable plug Type 2518, Form A according to DIN EN 175301-803 22
Accessories for ATEX/IECEX terminal box 22

DTS 1000011017 EN Version: W Status: RL (released | freigegeben | validé) printed: 09.11.2021

1. General technical data

Product properties	
Dimensions	Detailed information can be found in chapter "4. Dimensions" on page 9.
Materials	
Body	Brass
Coil	Epoxy resin (polyamide on request)
Seal	PTFE seat seal + FKM PTFE seat seal + Graphite steam version PTFE seat seal + EPDM on request
Nominal diameter	DN 12…DN 50
Coil insulation class	H (B on request)
Circuit functions	A and B
Valve internals	Stainless steel, brass
Performance data	
Duty cycle	100 % continuous rating
Response times	
DN 12…DN 25	Opening: 20…400 ms Closing: 100…1500 ms
DN 32…DN 50	Opening: 200…1500 ms Closing: 1000…3000 ms
Electrical data	
Voltage tolerance	±10 %
Electrical power consumption	
Circuit function A, DN 12…DN 25 (not in combination with high pressure MX13)	Inrush AC: 24 VA Hold AC (hot coil): 14 VA/8 W Hold DC (hot/cold coil): 8/9.5 W
Circuit function B, DN 12…DN 25	Inrush AC: 24 VA Hold AC (hot coil): 14 VA/8 W Hold DC (hot/cold coil): 8/9.5 W
ATEX/IECEx version	Inrush AC: 9 VA Hold AC (hot coil): 9 VA Hold DC (hot/cold coil): 9 W
Circuit function A, DN 32…DN 50 and DN 12 as high pressure MX13	Inrush AC: 24 VA Hold AC (hot coil): 16 VA/10 W Hold DC (hot/cold coil): 12/13 W
Medium data	
Medium	Neutral mediums, compressed air, water, hydraulic oil and steam
Medium temperature	
Standard	-10 °C…120 °C
Steam version	Up to 160 °C, see "5.1. Temperature/duty cycle derating diagram for steam version NA07" on page 16 (from -40 °C on request) Up to 180 °C for AC 6 Watt
Approvals and Certificates	
Protection class	IP65 with cable plug (IP67 on request)
Product connections	
Electrical connection	Tag connector acc. to DIN EN 175301-803 Form A
Environment and installation	
Installation	As required, preferably with actuator upright
Ambient temperature	-10 °C…+55 °C (from -40 °C on request)

DTS 1000011017 EN Version: W Status: RL (released | freigegeben | validé) printed: 09.11.2021

2. Circuit functions

Circuit functions	Description
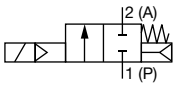	**Type: A, solenoid valve** 2/2 way Servo-controlled Normally closed
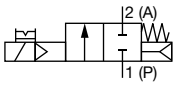	**Type: B, solenoid valve** 2/2 way Servo-controlled Normally open

3. Materials

3.1. Chemical Resistance Chart – Bürkert resistApp



Bürkert resistApp – Chemical Resistance Chart

You want to ensure the reliability and durability of the materials in your individual application case? Verify your combination of media and materials on our website or in our resistApp.

Start Chemical Resistance Check

3.2. Standard version

DN 12, Circuit function A

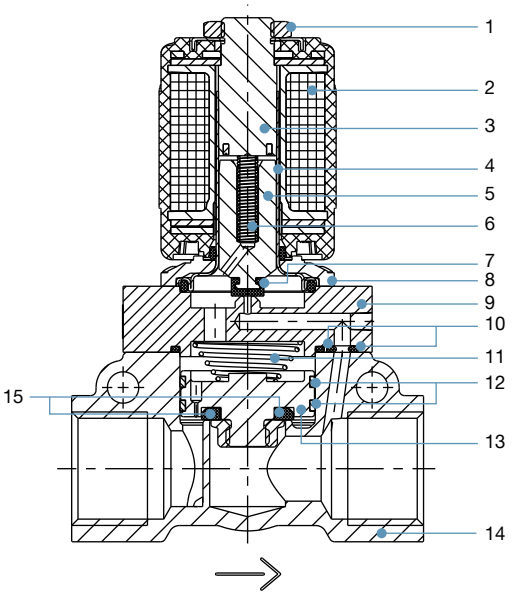

No.	Element	Material
1	Nut	Steel (thick-film passivated according to RoHS)
2	Coil	Epoxy (polyamide optional)
3	Stopper	Stainless steel 1.4105
4	Armature guide tube	Stainless steel 1.4303
5	Plunger	Stainless steel 1.4105
6	Spring	Stainless steel 1.4310
7	Plunger seal	FKM (EPDM optional)
8	Flange	Steel (thick-film passivated according to RoHS)
9	Cover	Brass
10	O-Rings	FKM (EPDM optional)
11	Spring	Stainless steel 1.4310
12	Piston rings	PTFE
13	Piston	Brass
14	Valve body	Brass
15	Piston seal	PTFE

DTS 1000011017 EN Version: W Status: RL (released | freigegeben | validé) printed: 09.11.2021

DN 25, Circuit function B

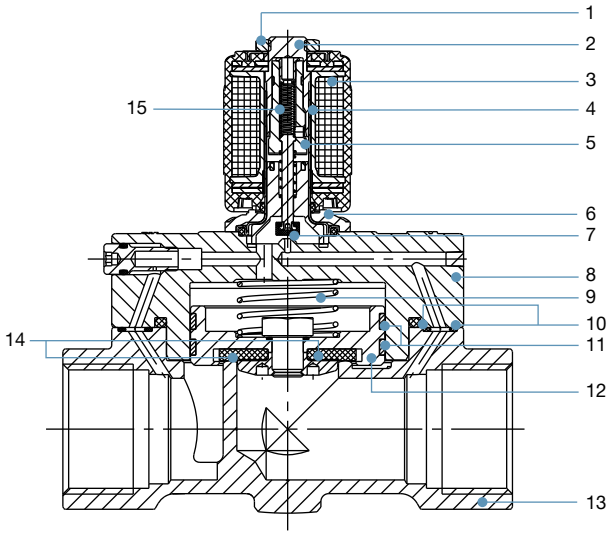

No.	Element	Material
1	Nut	Steel (thick-film passivated according to RoHS)
2	Stopper	Stainless steel 1.4113
3	Coil	Epoxy
4	Armature guide tube	Stainless steel 1.4303
5	Plunger	Stainless steel 1.4113/1.4305
6	Flange	Steel (thick-film passivated according to RoHS)
7	Plunger seal	FKM (EPDM optional)
8	Cover	Brass
9	Spring	Stainless steel 1.4310
10	O-Rings	FKM (EPDM optional)
11	Piston rings	PTFE
12	Piston	Brass
13	Valve body	Brass
14	Piston seal	PTFE
15	Spring	Stainless steel 1.4310

DN 32, Circuit function A

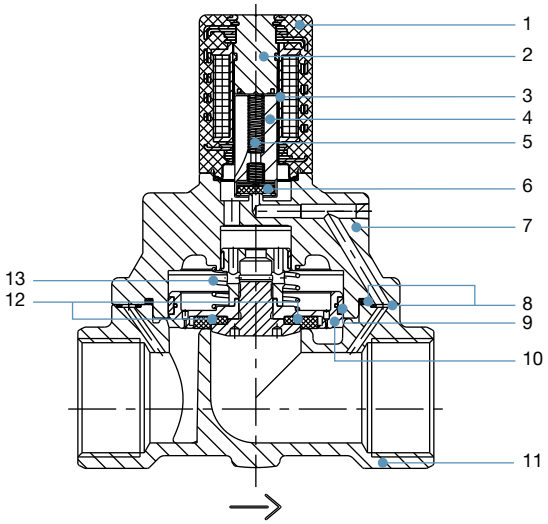

No.	Element	Material
1	Coil	Epoxy
2	Stopper	Stainless steel 1.4105
3	Armature guide tube	Stainless steel 1.4303
4	Plunger	Stainless steel 1.4105
5	Spring	Stainless steel 1.4310
6	Plunger seal	FKM
7	Cover	Brass
8	O-Rings	FKM
9	Piston rings	PTFE
10	Piston	Brass
11	Valve body	Brass
12	Piston seal	PTFE
13	Spring	Stainless steel 1.4310

DTS 1000011017 EN Version: W Status: RL (released | freigegeben | validé) printed: 09.11.2021

3.3. Steam version NA07

DN 13, Circuit function A

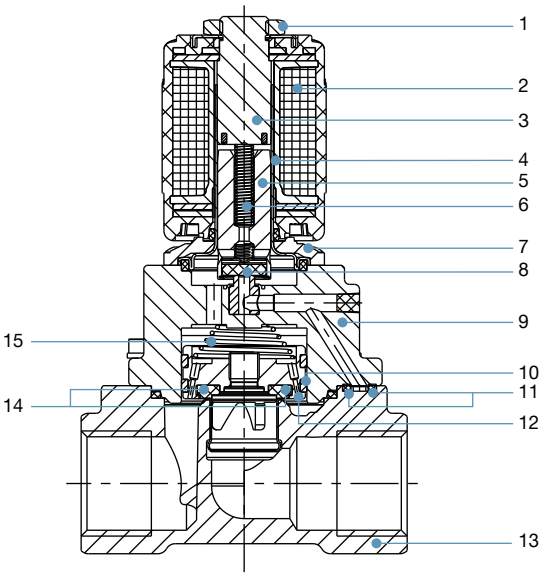

No.	Element	Material
1	Nut	Steel (thick-film passivated according to RoHS)
2	Coil	Epoxy
3	Stopper	Stainless steel 1.4113
4	Armature guide tube	Stainless steel 1.4303
5	Plunger	Stainless steel 1.4113
6	Spring	Stainless steel 1.4310
7	Flange	Steel (thick-film passivated according to RoHS)
8	Plunger seal	PTFE
9	Cover	Brass
10	Piston rings	PTFE
11	O-Rings	Graphite
12	Piston	Brass
13	Valve body	Brass
14	Piston seal	PTFE
15	Spring	Stainless steel 1.4310

DN 32, Circuit function A, flange body

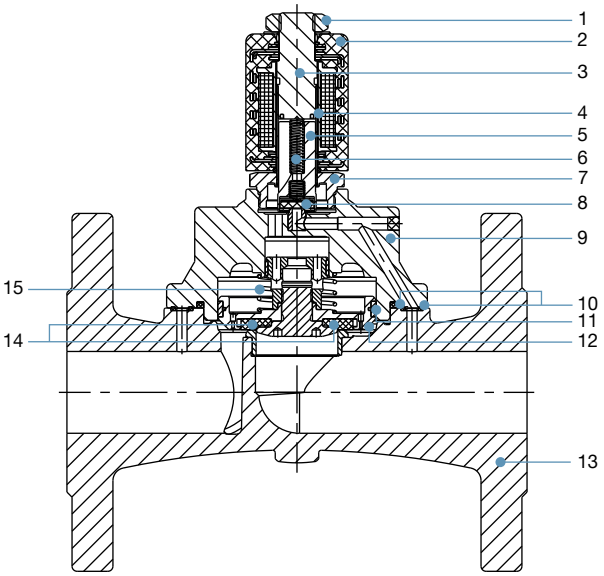

No.	Element	Material
1	Nut	Steel (thick-film passivated according to RoHS)
2	Coil	Epoxy
3	Stopper	Stainless steel 1.4113
4	Armature guide tube	Stainless steel 1.4571
5	Plunger	Stainless steel 1.4113
6	Spring	Stainless steel 1.4310
7	Threaded tube	Stainless steel 1.4401 or 1.4571
8	Plunger seal	PTFE
9	Cover	Brass
10	O-Rings	Graphite
11	Piston rings	PTFE
12	Piston	Brass
13	Valve body	Stainless steel 1.4581
14	Piston seal	PTFE
15	Spring	Stainless steel 1.4310

DTS 1000011017 EN Version: W Status: RL (released | freigegeben | validé) printed: 09.11.2021

3.4. High pressure version MX13

DN 12, Circuit function A

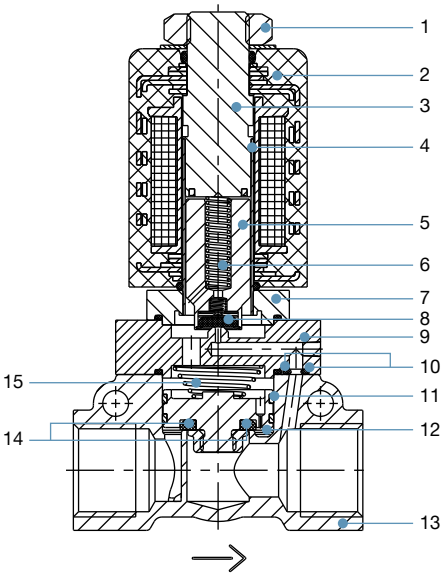

No.	Element	Material
1	Nut	Steel (thick-film passivated according to RoHS)
2	Coil	Epoxy (polyamide)
3	Stopper	Stainless steel 1.4113
4	Armature guide tube	Stainless steel 1.4571
5	Plunger	Stainless steel 1.4113
6	Spring	Stainless steel 1.4310
7	Flange	Stainless steel 1.4401
8	Plunger seal	PTFE
9	Cover	Brass
10	O-Rings	FKM
11	Piston rings	PTFE
12	Piston	Brass
13	Valve body	Brass
14	Piston seal	PTFE
15	Spring	Stainless steel 1.4310

3.5. Discharge valve for compressor systems CF05

DN 12, Circuit function B

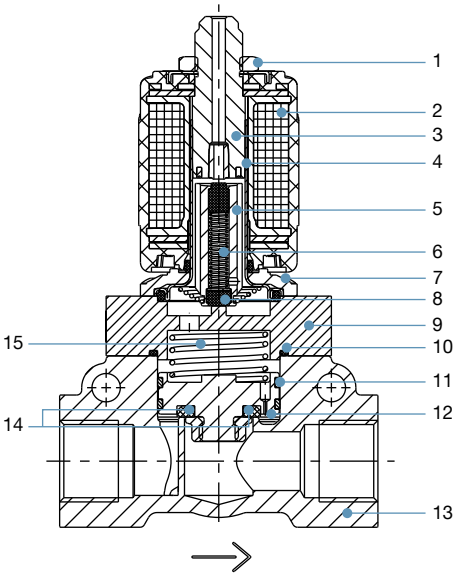

No.	Element	Material
1	Nut	Steel (thick-film passivated according to RoHS)
2	Coil	Epoxy (polyamide optional)
3	Stopper	Stainless steel 1.4105
4	Armature guide tube	Stainless steel 1.4303
5	Plunger	Stainless steel 1.4105
6	Spring	Stainless steel 1.4310
7	Flange	Steel (thick-film passivated according to RoHS)
8	Plunger seal	FKM
9	Cover	Brass
10	O-Rings	FKM
11	Piston rings	PTFE
12	Piston	Brass
13	Valve body	Brass
14	Piston seal	PTFE
15	Spring	Stainless steel 1.4310

DTS 1000011017 EN Version: W Status: RL (released | freigegeben | validé) printed: 09.11.2021

4. Dimensions

4.1. Standard version

Threaded version DN 12

Note:

- For G-threads the dimensions D1 and F1 apply.
- For NPT-threads the dimensions D2 and F2 apply.
- For Rc-threads the dimensions D3 and F3 apply.
- Dimensions in mm

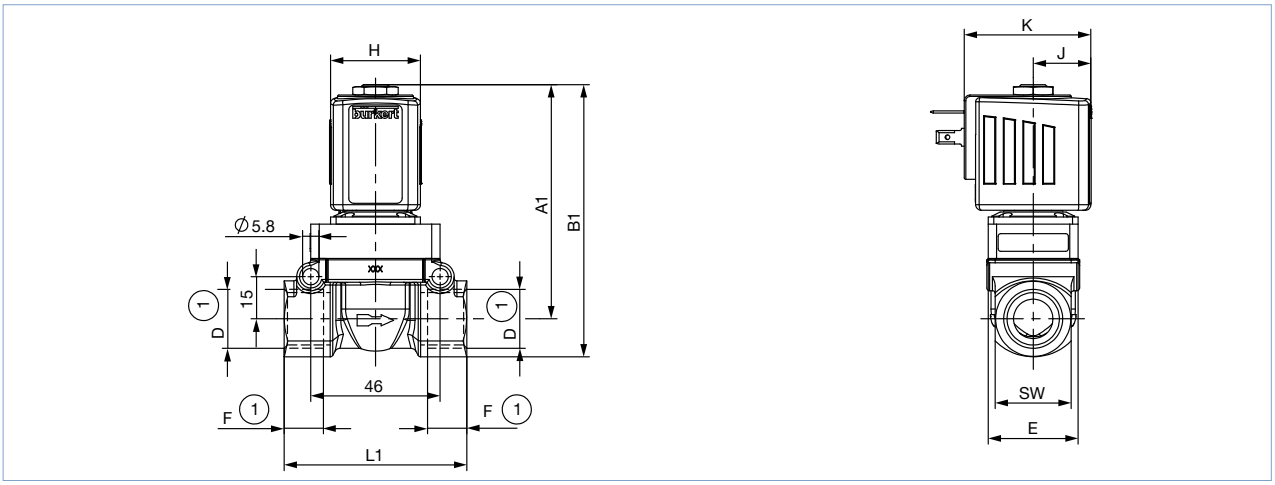

Coil size	DN	WWA		WWB		G thread		NPT thread		Rc thread		E	L1	SW	H	J	K
		A1	B1	A1	B1	D1	F1	D2	F2	D3	F3						
5	12.0	83	96.5	90.5	104	G ½	14	NPT ½	13.7	Rc ½	13.2	33	65	27	32	20.5	45
6	12.0	83	96.5	90.5	104	G ½	14	NPT ½	13.7	Rc ½	13.2	33	65	27	40	23.5	51

Threaded version DN 20 and DN 25

Note:

- For G-threads the dimensions D1 and F1 apply.
- For NPT-threads the dimensions D2 and F2 apply.
- For Rc-threads the dimensions D3 and F3 apply.
- Dimensions in mm

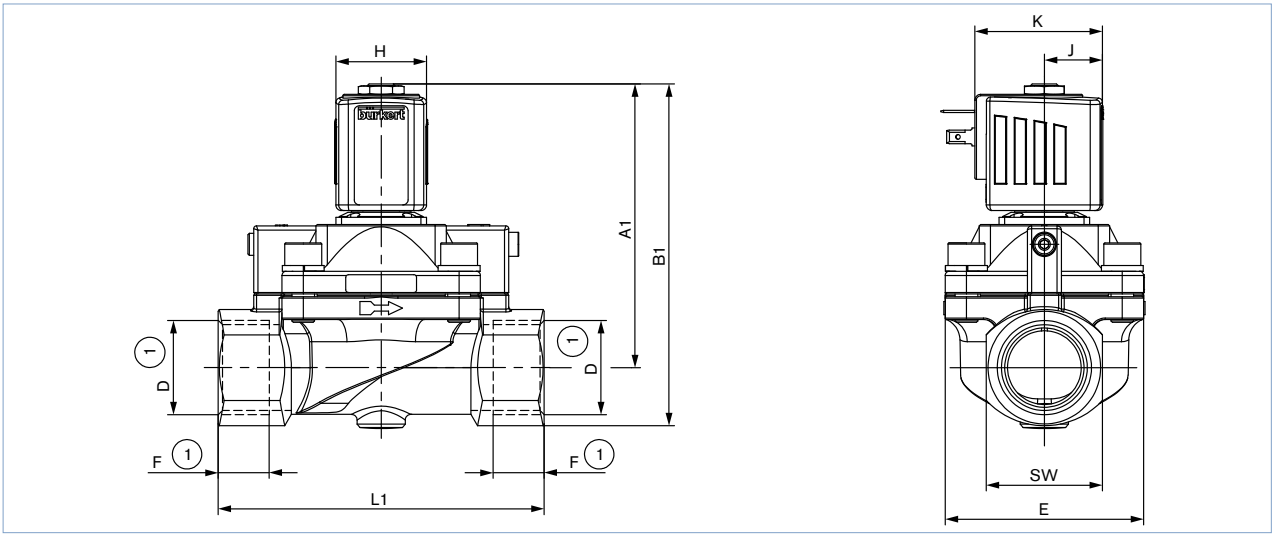

DTS 1000011017 EN Version: W Status: RL (released | freigegeben | validé) printed: 09.11.2021

Coil size	DN	WWA		WWB		G thread		NPT thread		Rc thread		E	L1	SW	H	J	K
		A1	B1	A1	B1	D1	F1	D2	F2	D3	F3						
5	20.0	93	109	90.5	104	G ¾	16	NPT ¾	14	Rc ¾	14.5	60	100	32	32	20.5	45
	25.0	99.5	119			G 1	18	NPT 1	16.8	Rc 1	16.8	70	115	41			
6	20.0	93	109			G ¾	16	NPT ¾	14	Rc ¾	14.5	60	100	32	40	23.5	51
	25.0	99.5	119			G 1	18	NPT 1	16.8	Rc 1	16.8	70	115	41			

Threaded version DN 32 and DN 50

Note:

- For G-threads the dimensions D1 and F1 apply.
- For NPT-threads the dimensions D1 and F1 apply.
- Dimensions in mm

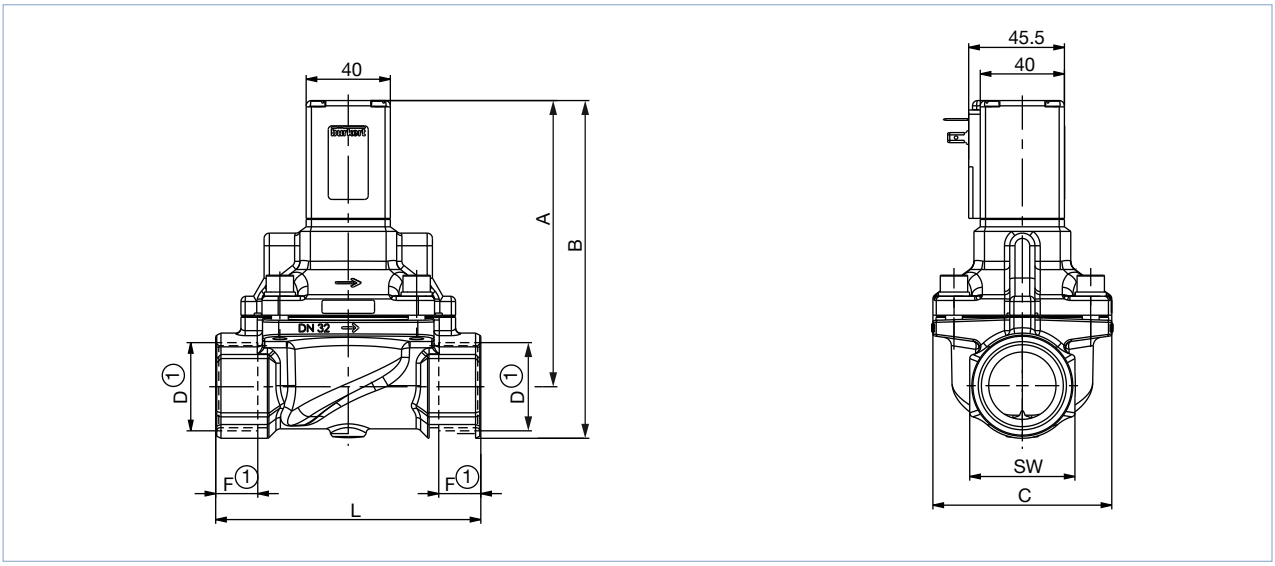

DN	A	B	G thread		NPT thread		C	L	SW
			D1	F1	D2	F2			
32	136	161	G 1¼	20	NPT 1¼	17.3	85	126	50
32	140	170	G 1½	22	NPT 1½	17.3	85	126	60
50	163	198	G 2	24	NPT 2	17.6	115	164	70

DTS 1000011017 EN Version: W Status: RL (released | freigegeben | validé) printed: 09.11.2021

4.2. Steam version NA07

Threaded version DN 13

Note:

- For G-threads the dimensions D1 and F1 apply.
- For NPT-threads the dimensions D2 and F2 apply.
- For Rc-threads the dimensions D3 and F3 apply.
- Dimensions in mm

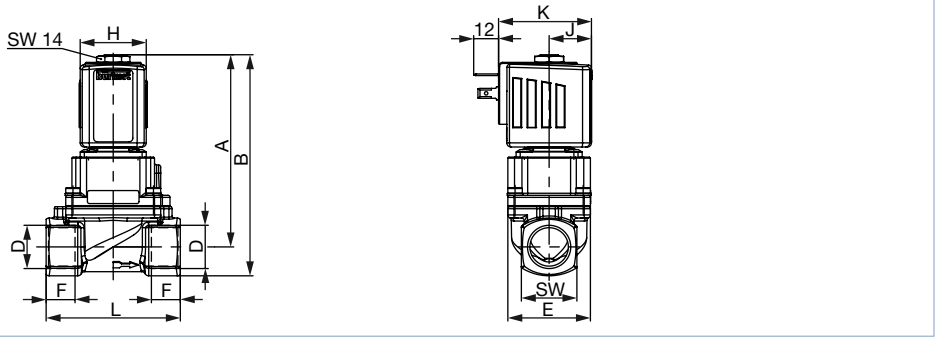

Coil size	DN	A	B	G thread		NPT thread		Rc thread		E	L	SW	H	J	K
				D1	F1	D2	F2	D3	F3						
5	13	93.1	107.1	G ½	14	NPT ½	13.7	Rc ½	13.2	40	65	27	32	20.5	45
6	13	93.1	107.1	G ½	14	NPT ½	13.7	Rc ½	13.2	40	65	27	40	23.5	51

Threaded version DN 20, DN 25

Note:

- For G-threads the dimensions D1 and F1 apply.
- For NPT-threads the dimensions D2 and F2 apply.
- For Rc-threads the dimensions D3 and F3 apply.
- Dimensions in mm

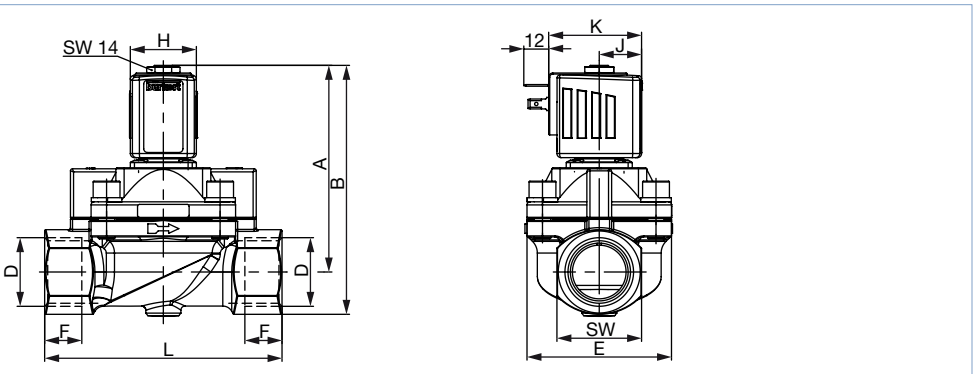

Coil size	DN	A	B	G thread		NPT thread		Rc thread		E	L	SW	H	J	K
				D1	F1	D2	F2	D3	F3						
5	20	96.1	112.1	G ¾	16	NPT ¾	14	Rc ¾	14.5	60	100	32	32	20.5	45
	25	100.1	120.6	G 1	18	NPT 1	16.8	Rc 1	16.8	70	115	41			
6	20	96.1	112.1	G ¾	16	NPT ¾	14	Rc ¾	14.5	60	100	32	40	23.5	51
	25	100.1	120.6	G 1	18	NPT 1	16.8	Rc 1	16.8	70	115	41			

DTS 1000011017 EN Version: W Status: RL (released | freigegeben | validé) printed: 09.11.2021

Flange version DN 25

Note:

- For G-threads the dimensions D1 and F1 apply.
- For NPT-threads the dimensions D2 and F2 apply.
- For Rc-threads the dimensions D3 and F3 apply.
- Dimensions in mm

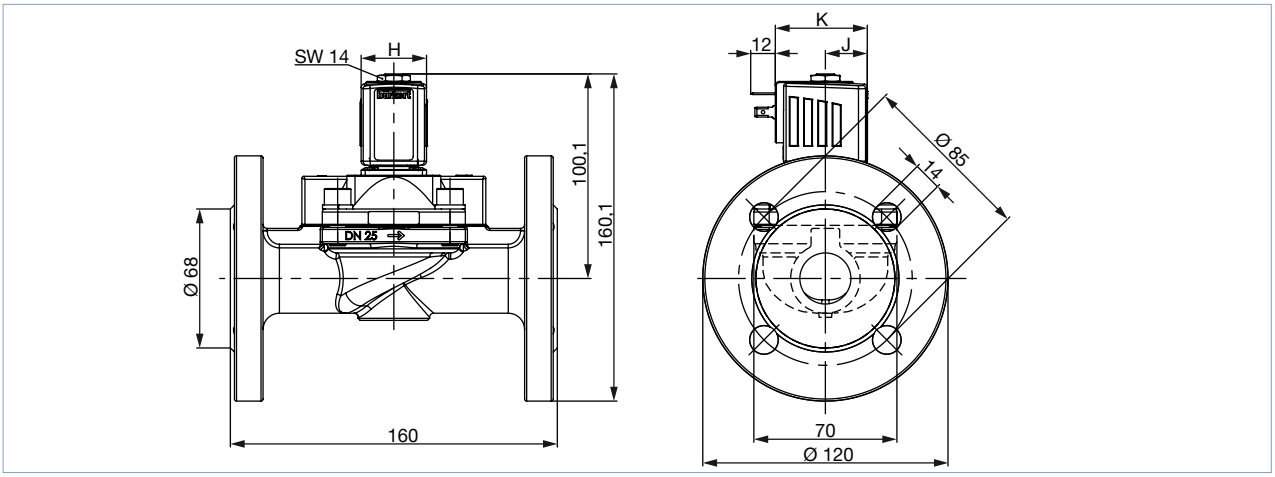

Coil size	DN	A	B	G thread		NPT thread		Rc thread		E	L	SW	H	J	K
				D1	F1	D2	F2	D3	F3						
5	25	100.1	120.6	G 1	18	NPT 1	16.8	Rc 1	16.8	70	115	41	32	20.5	45
6	25	100.1	120.6	G 1	18	NPT 1	16.8	Rc 1	16.8	70	115	41	40	23.5	51

Threaded version DN 32 and DN 40

- For G-threads the dimensions D1 and F1 apply.
- For NPT-threads the dimensions D2 and F2 apply.
- Dimensions in mm

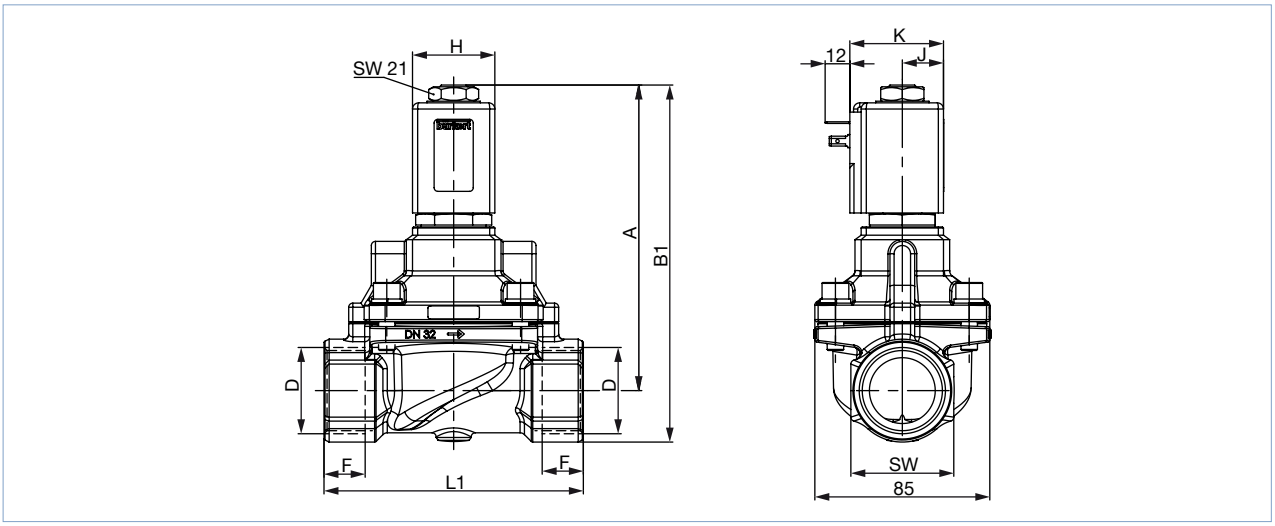

Coil size	DN	A	B1	G thread		NPT thread		L	B2	C	G	L2	M	SW	H	J	K
				D1	F1	D2	F2										
C	32	148	173	G 1¼	20	NPT 1¼	17.3	126	218	78	140	180	100	50	40	20	45
	40	153	181	G 1½	22	NPT 1½	17.3	126	227	88	150	200	110	60			

DTS 1000011017 EN Version: W Status: RL (released | freigegeben | validé) printed: 09.11.2021

Flange version DN 32 and DN 40

Note:

- For G-threads the dimensions D1 and F1 apply.
- For NPT-threads the dimensions D2 and F2 apply.
- Dimensions in mm

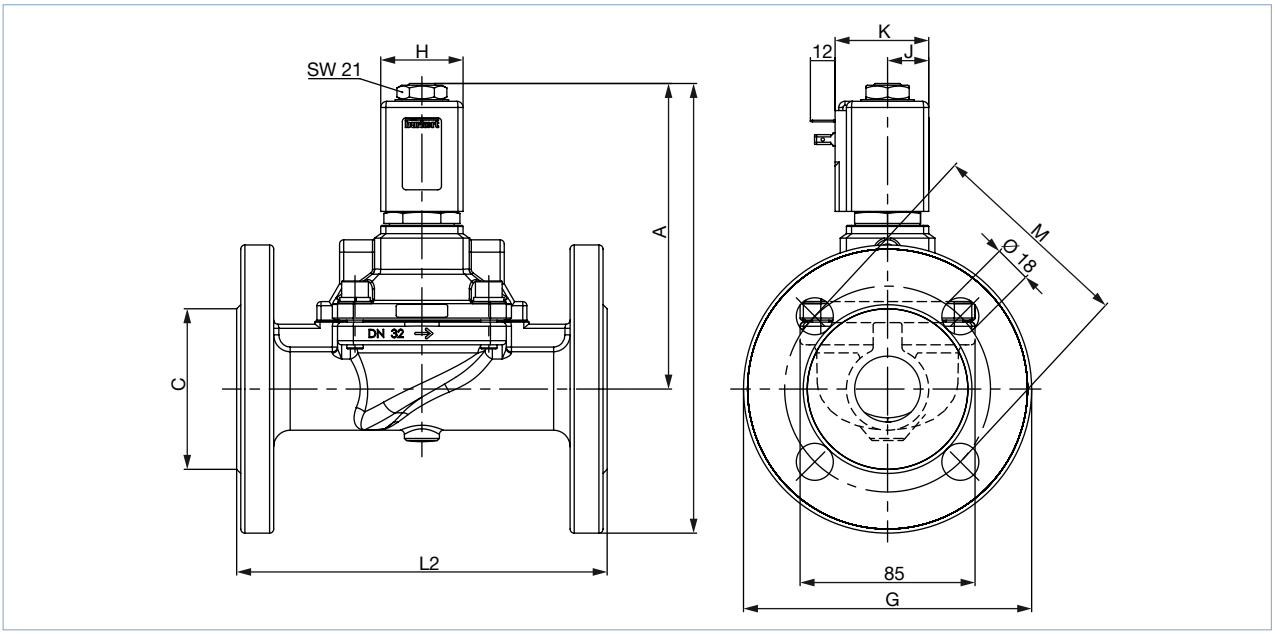

Coil size	DN	A	B1	G thread		NPT thread		L	B2	C	G	L2	M	SW	H	J	K
				D1	F1	D2	F2										
C	32	148	173	G 1¼	20	NPT 1¼	17.3	126	218	78	140	180	100	50	40	20	45
	40	153	181	G 1½	22	NPT 1½	17.3	126	227	88	150	200	110	60			

DTS 1000011017 EN Version: W Status: RL (released | freigegeben | validé) printed: 09.11.2021

DTS 1000011017 EN Version: W Status: RL (released | freigegeben | validé) printed: 09.11.2021

4.3. High pressure version MX13

Note:
Dimensions in mm

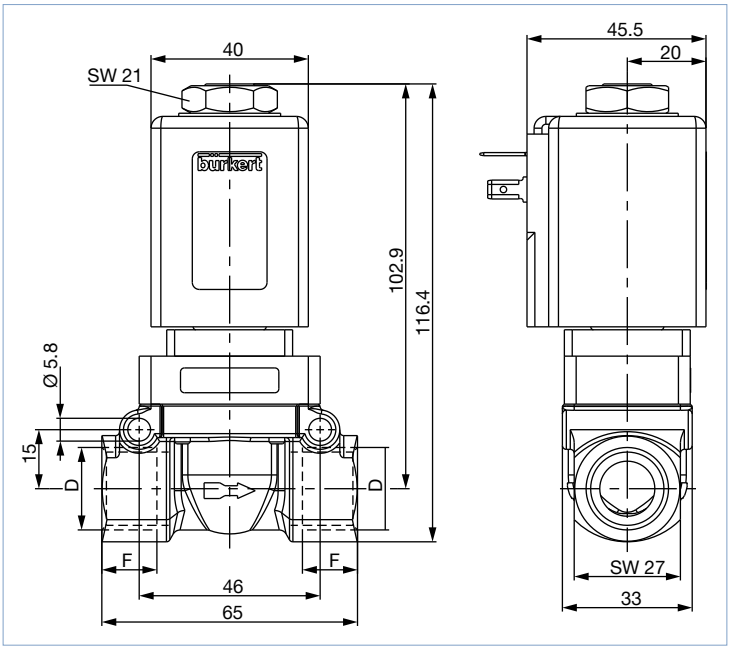

D	F
G ½	14
NPT ½	13.7

4.4. Discharge valve for compressor systems CF05

Plug version with ventilation

Note:
Dimensions in mm

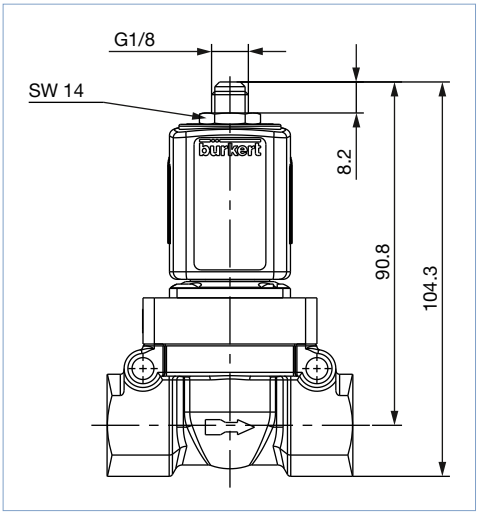

4.5. ATEX/IECEx version

Cable version

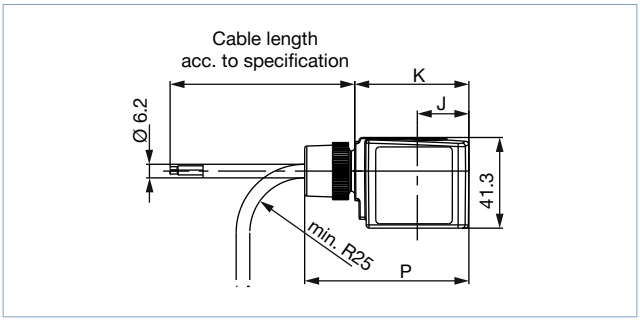

Terminal box

Note:

- For G-threads the dimensions D1 and F1 apply.
- For NPT-threads the dimensions D2 and F2 apply.
- For Rc-threads the dimensions D3 and F3 apply.
- Dimensions in mm

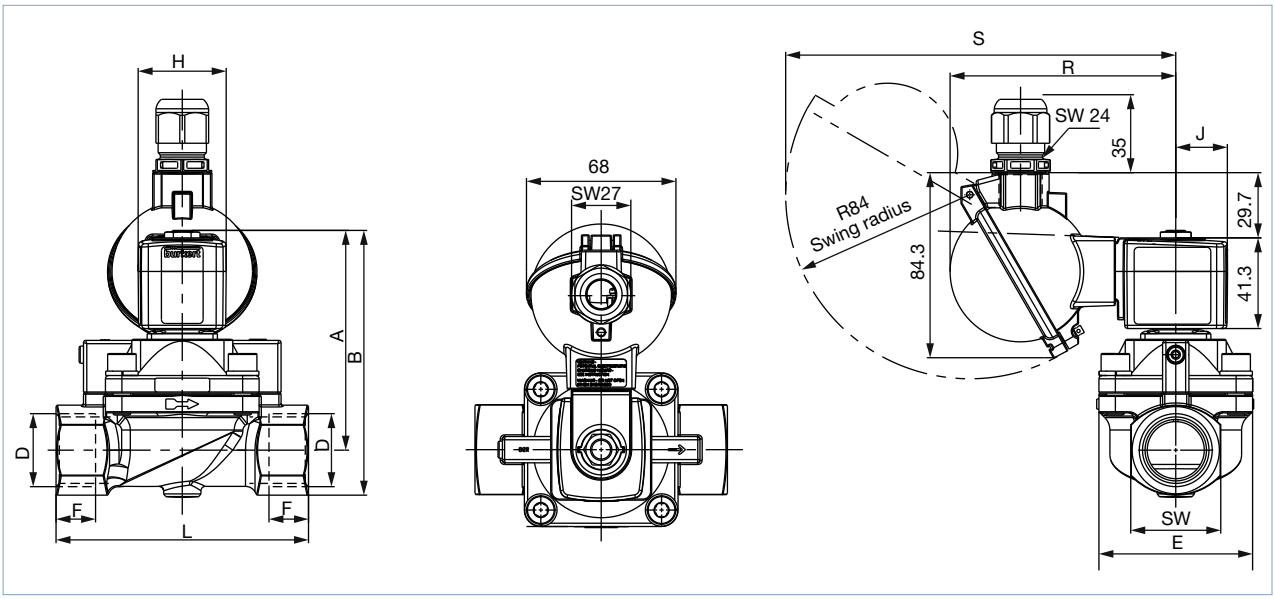

Coil size	DN	WWA		WWB		G thread		NPT thread		Rc thread		E	L	SW	H	J	K	P	R	S
		A	B	A	B	D1	F1	D2	F2	D3	F3									
5	12	83	96.5	90.8	104.3	G ½	14	NPT ½	13.7	Rc ½	13.2	33	65	27	32	20.5	46	68.8	99.8	174.7
	20	93	109			G ¾	16	NPT ¾	14	Rc ¾	14.5	60	100	32						
	25	99.5	119			G 1	18	NPT 1	16.8	Rc 1	16.8	70	115	41						
6	12	83	96.5	90.8	104.3	G ½	14	NPT ½	13.7	Rc ½	13.2	33	65	27	40	23.5	52	74.8	102.8	177.7
	20	93	109			G ¾	16	NPT ¾	14	Rc ¾	14.5	60	100	32						
	25	99.5	119			G 1	18	NPT 1	16.8	Rc 1	16.8	70	115	41						

DTS 1000011017 EN Version: W Status: RL (released | freigegeben | validé) printed: 09.11.2021

5. Performance specifications

5.1. Temperature/duty cycle derating diagram for steam version NA07

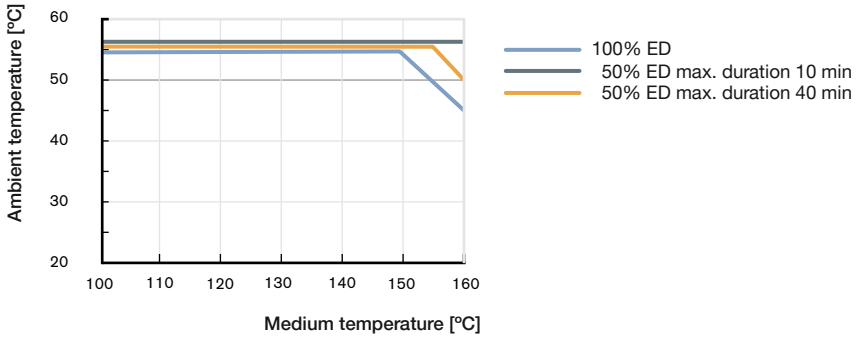

5.2. Characteristic values of intermittent operation

$$t_{SD}[s] = \frac{60}{SH\left[\frac{1}{min}\right]}$$

$$t_{ED}[s] = \frac{ED[\%]}{100} \times t_{SD}[s]$$

$$t_{SP}[s] = t_{SD}[s] - t_{ED}[s]$$

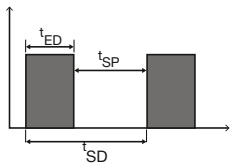

t_{SD} – Cycle time

t_{ED} – Duty cycle

t_{SP} – De-energized pause

ED – Relative duty cycle relative

SH – Switching frequency

6. Product accessories

6.1. Cable glands for ATEX/IECEx terminal box

Note:
A cable gland in polyamide version is included in the delivery. A nickel-plated brass version can be ordered at a surcharge.

Description	Ex approvals		Dimensions	
	Certification	Identification		
Ex cable gland, Brass, nickel-plated, 6…13 mm 	PTB 04 ATEX 1112 X, IECEx PTB 13.0027X	II 2 G Ex e IIC Gb, II 2 D Ex tb IIIC Db IP68	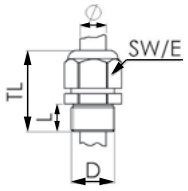	TL 29…37 mm L 6 mm D 20 mm SW 24 mm E 27 mm
Ex cable gland, Polyamide, 7…13 mm 	PTB 13 ATEX 1015 X, IECEx PTB 13.0034X	II 2 G Ex e IIC Gb, II 2 D Ex tb IIIC Db IP68	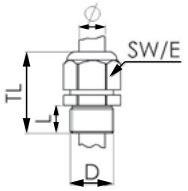	TL 36…45 mm L 10 mm D 20 mm SW 24 mm E 28 mm

DTS 1000011017 EN Version: W Status: RL (released | freigegeben | validé) printed: 09.11.2021

6.2. Special tool to turn the junction box

Note:
This special tool is not supplied with the valve (see "7.4. Ordering chart accessories" on page 22).

Set SC02-AC10	
	**Set includes:** • Special wrench • Service manual

7. Ordering information

7.1. Bürkert eShop – Easy ordering and quick delivery



Bürkert eShop – Easy ordering and fast delivery

You want to find your desired Bürkert product or spare part quickly and order directly? Our online shop is available for you 24/7. Sign up and enjoy all the benefits.

Order online now

7.2. Bürkert product filter



Bürkert product filter – Get quickly to the right product

You want to select products comfortably based on your technical requirements? Use the Bürkert product filter and find suitable articles for your application quickly and easily.

Try out our product filter

DTS 1000011017 EN Version: W Status: RL (released | freigegeben | validé) printed: 09.11.2021

7.3. Ordering chart

Standard version DN 12...DN 25

Note:

- Other versions are available on request.
- Please note that the cable plug has to be ordered separately, see "7.4. Ordering chart accessories" on page 22 or separate data sheet **Type 2518** ▶.

Circuit function	Port connection	Orifice	K_v value water	Pressure range for liquids	Pressure range for gases	Article no. per voltage/frequency [V/Hz]		
		[mm]	[m^3/h]	[bar]	[bar]	024/DC	024/50	230/50
Seal material PTFE/FKM								
A, solenoid valve 2/2 way servo-controlled, normally closed 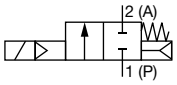	G ½	12	2.0	1...50	1...50	308501	177853	308502
	G ¾	20	7.0	1...25	1...32	308503	–	–
				1...25	1...40	–	308504	308505
	G 1	25	10.0	1...25	1...32	308506	–	–
				1...25	1...40	–	308507	308508
B, solenoid valve 2/2 way servo-controlled, normally open 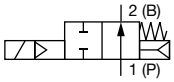	G ½	12	2.0	1...32	1...32	309022	301170	295636
	G ¾	20	7.0	1...25	1...25	303209	295276	295651
	G 1	25	10.0	1...25	1...25	295660	308120	301740

Standard version DN 32...DN 50

Circuit function	Port connection	Orifice	K_v value water	Pressure range for liquids	Pressure range for gases	Article no. per voltage/frequency [V/Hz]		
		[mm]	[m^3/h]	[bar]	[bar]	024/DC	024/50	230/50
Seal material PTFE/FKM								
A, solenoid valve 2/2 way servo-controlled, normally closed 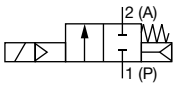	G 1¼	32	18.0	1...16	1...16	122579	–	–
				1...25	1...25	–	085337	085340
	G 1½	40	18.0	1...16	1...16	085343	–	–
				1...25	1...25	–	085342	085345
	G 2	50	36.0	1...8	1...8	307475	–	–
				1...20	1...20	–	307476	085350

DTS 1000011017 EN Version: W Status: RL (released | freigegeben | validé) printed: 09.11.2021

Steam version NA07, DN 13...DN 25

Note:

- Please note that the cable plug has to be ordered separately, see "7.4. Ordering chart accessories" on page 22 or separate data sheet **Type 2518** ▶.
- Due to the temperature range, the cable plug with silicone seal is provided for steam versions NA07.
- Please also note the derating diagram, see "5.1. Temperature/duty cycle derating diagram for steam version NA07" on page 16.

Circuit function	Port connection	Orifice	K_v value water	Pressure range	Max. medium temperature	Body material	Article no. per voltage/frequency [V/Hz]		
		[mm]	[m³/h]	[bar]	[°C]		024/DC	024/50	230/50
Seal material PTFE/graphite									
A, solenoid valve 2/2 way servo-controlled, normally closed 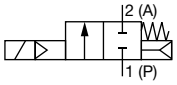	G ½	13	3,7	1…5	150	Brass	307267	–	–
				1…12		Brass	–	307269	307276
				1…12	180	Brass	–	20004404	20004405
	G ¾	20	7,0	1…5	150	Brass	307286	–	–
				1…12		Brass	–	307284	307326
				1…12	180	Brass	–	20004406	20004407
	G 1	25	10,0	1…5	150	Brass	307342	–	–
				1…12		Brass	–	307343	307351
				1…12	180	Brass	–	20004409	20004410
	Flange acc. to DIN EN 1902-1	25	10,0	1…5	150	Stainless steel	354392	–	–
				1…12		Stainless steel	–	20004413	354392
				1…12	180	Stainless steel	–	20004411	20004412

X: on request

Steam version NA07, DN 32...DN 40

Note:

- Please note that the cable plug has to be ordered separately, see "7.4. Ordering chart accessories" on page 22 or separate data sheet **Type 2518** ▶.
- Due to the temperature range, the cable plug with silicone seal is provided for steam versions NA07.
- Please also note the derating diagram, see "5.1. Temperature/duty cycle derating diagram for steam version NA07" on page 16.

Circuit function	Port connection	Orifice	K_v value water	Pressure range	Body material	Article no. nach Spannung/ Frequenz [V/Hz]		
		[mm]	[m³/h]	[bar]		024/DC	024/50	230/50
Seal material PTFE/graphite								
A, solenoid valve 2/2 way servo-controlled, normally closed 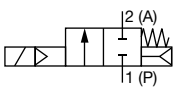	G 1¼	32	18.0	1…4	Brass	316584	–	–
				1…12	Brass	–	316580	316579
	Flange acc. to DIN EN 1902-1	32	18.0	1…4	Stainless steel	X	–	–
				1…12	Stainless steel	–	X	363040
	G 1½	40	18.0	1…4	Brass	316592	–	–
				1…12	Brass	–	316586	316588
	Flange acc. to DIN EN 1902-1	40	18.0	1…4	Stainless steel	X	–	–
				1…12	Stainless steel	–	370111	363041

X: on request

DTS 1000011017 EN Version: W Status: RL (released | freigegeben | validé) printed: 09.11.2021

High pressure version MX13

Note:

- Please note that the cable plug has to be ordered separately, see "7.4. Ordering chart accessories" on page 22 or separate data sheet **Type 2518** ▶.
- High shut off levels may occur with liquids and high differential pressure!

Circuit function	Port connection	Orifice	K_v value water	Pressure range for liquids	Pressure range for gases	Article no. per voltage/frequency [V/Hz]		
		[mm]	[m³/h]	[bar]	[bar]	024/DC	024/50	230/50
Seal material PTFE/FKM								
A, solenoid valve 2/2 way servo-controlled, normally closed 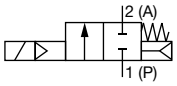	G ½	12	2.0	1…80	1…80	304191	304193	304194

Discharge valve for compressor systems CF05

Circuit function	Port connection	Orifice	K_v value water	Pressure range for liquids	Pressure range for gases	Article no. per voltage/frequency [V/Hz]		
		[mm]	[m³/h]	[bar]	[bar]	024/DC	024/50	230/50
Seal material PTFE/FKM								
B, solenoid valve 2/2 way servo-controlled, normally open 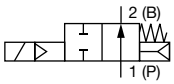	G ½	12	2.0	1…40	1…40	301723	308781	308783

DTS 1000011017 EN Version: W Status: RL (released | freigegeben | validé) printed: 09.11.2021

ATEX/IECEx version with 3-meter cable

Note:
The pressure values for liquid media are shown on the rating plate.

Circuit function	Port connection	Orifice	K_V value water	Pressure range for liquids	Pressure range for gases	Article no. per voltage/ frequency	
		[mm]	[m³/h]	[bar]	[bar]	24 V AC/DC	230 V AC/DC
Seal material PTFE/FKM							
A, solenoid valve 2/2 way servo-controlled, normally closed 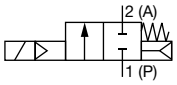	G ½	12	2.0	1…50	1…50	349290	349292
	G ¾	20	7.0	1…25	1…32	349294	349296
	G 1	25	10.0	1…25	1…32	349300	349301
B, solenoid valve 2/2 way servo-controlled, normally open 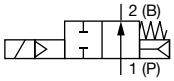	G ½	12	2.0	1…32	1…32	349302	349304
	G ¾	20	7.0	1…25	1…25	349307	349309
	G 1	25	10.0	1…25	1…25	349310	349313

Explosions protected approvals			
ATEX:	PTB 14 ATEX 2023 X II 2G Ex mb IIC T4 Gb II 2D Ex mb IIIC T130 °C Db	IECEx:	IECEx PTB 14.0049 X Ex mb IIC T4 Gb Ex mb IIIC T130 °C Db

ATEX/IECEx terminal box

Note:

- Please note that the cable plug has to be ordered separately, see "7.4. Ordering chart accessories" on page 22 or separate data sheet **Type 2513** ▶.
- The pressure values for liquid media are shown on the rating plate.

Circuit function	Port connection	Orifice	K_V value water	Pressure range for liquids	Pressure range for gases	Article no. per voltage/ frequency	
		[mm]	[m³/h]	[bar]	[bar]	24 V AC/DC	230 V AC/DC
Seal material PTFE/FKM							
A, solenoid valve 2/2 way servo-controlled, normally closed 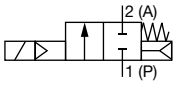	G ½	12	2.0	1…50	1…50	349289	349293
	G ¾	20	7.0	1…25	1…32	349295	349297
	G 1	25	10.0	1…25	1…32	349299	349297
B, solenoid valve 2/2 way servo-controlled, normally open 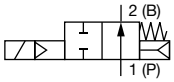	G ½	12	2.0	1…32	1…32	349303	349305
	G ¾	20	7.0	1…25	1…25	349306	349308
	G 1	25	10.0	1…25	1…25	349311	349312

Explosions protected approvals			
ATEX:	PTB 15 ATEX 1011U	IECEx:	PTB 15.0037U

DTS 1000011017 EN Version: W Status: RL (released | freigegeben | validé) printed: 09.11.2021

Further versions on request	
	Approvals UL, cURus for coil system, Hazardous Locations Expl. proof, EEx m/ed, versions for oxygen applications
	Voltage 110/50, non-standard voltages

7.4. Ordering chart accessories

Cable plug Type 2513, Form A according to DIN EN 175301-803

Note:

- The Cable plug Type 2513 meets the requirements of ATEX category 3 GD.
- For more information on the cable plug, see data sheet **Type 2513** ▶.

Cable plug	Circuit diagram	Cable length [mm]	Article no.
	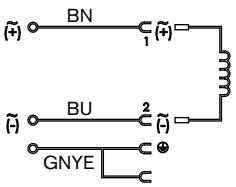	12000	260893
		5000	260892
		3000	260891
		300	260890

Cable plug Type 2518, Form A according to DIN EN 175301-803

Note:
Further versions see data sheet **Type 2518** ▶.

Cable plug	Dimensions	Version	Voltage	Article no.
	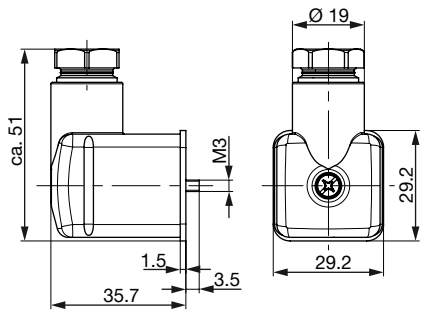	Without circuitry (AC/DC)	0…250 V AC/DC	314802
		With LED (AC/DC)	12…24 V AC/DC	314812
		With LED and varistor (AC/DC)	12…24 V AC/DC	314820
		With rectifier, LED and varistor	12…24 V AC/DC	314816
		Without circuitry (AC/DC) with silicone seal for higher ambient temperature, e.g. steam version (NA07)	0…250 V AC/DC	361687

Accessories for ATEX/IECEX terminal box

Note:

- A cable gland in polyamide version is included in the delivery. A nickel-plated brass version can be ordered at surcharge.
- For more information on Ex cable glands, see "6.1. Cable glands for ATEX/IECEx terminal box" on page 16.

Description	Article no.
Ex cable gland, brass, nickel-plated, 6…13 mm[1.)]	773278
Ex cable gland, polyamide, 7…13 mm[1.)]	773277
Set SC02-AC10: Special wrench[2.)] incl. service manual	293488

1.) Cable diameter

2.) Not included in the scope of delivery of the valve

DTS 1000011017 EN Version: W Status: RL (released | freigegeben | validé) printed: 09.11.2021

Bürkert – Close to You

For up-to-date addresses
please visit us at
www.burkert.com



DTS 1000011017 EN Version: W Status: RL (released | freigegeben | validé) printed: 09.11.2021

Credits, © and concept: Christian Bürkert GmbH & Co. KG | Photographs: Marc Eggimann Fotografie - 4051 Basel | Scanner GmbH - Werbeagentur Künzelsau - 74653 Künzelsau