# 22127-095 EURORACK SLIDE RAIL, 25 KG, 800D, 1 PAIR

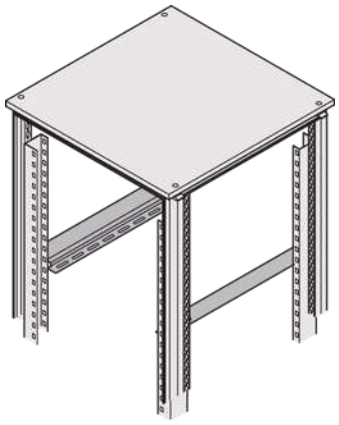

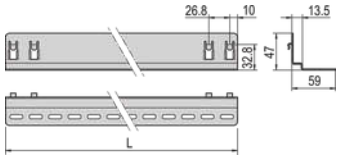


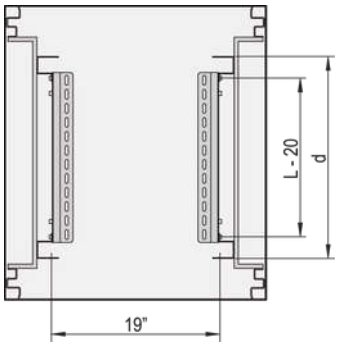


## KEY FEATURES

- St, 1.5 mm, finish AlZn
- Static load-carrying capacity 25 kg per pair
- Support shelf of heavy 19" chassis
- For assembly on the 19" panel/slide mounts
- Wide support surface
- Can be attached in 1 U increments

## PRODUCT ATTRIBUTES

- Product Type: Slide Rail
- Product Family: Eurorack
- Length: 620 mm
- Depth: 800 mm
- Static Load: 25 kg

## ADDITIONAL PRODUCT DETAILS

Eurorack Slide Rail with 25 kg load capacity for mounting on the cabinet uprights or 19" panel/slide mounts. The slide rail supports shelf of heavy 19" Chassis.

Standard distance for servers d = 740 mm. For assembly 4 pieces panel/slide mounts are necessary (please order separately, see panel/slide mount).

## CERTIFICATIONS




**North America**
All locations
+1.763.422.2661
Chat with us:
schroff.nvent.com

**Europe**
Straubenhardt, Germany
+49.7082.794.0
Betschdorf, France
+33.3.88.90.64.90
Warsaw, Poland
+48.22.209.98.35
Assago, Italy
+39.02.932.7141
Chat with us:
schroff.nvent.com

**Asia**
Shanghai, China
+86.21.2412.6943
Qingdao, China
+86.532.8771.6101
Singapore
+65.6768.5800
Shin-Yokohama, Japan
+81.45.476.0271
Chat with us:
schroff.nvent.com

**Middle East & India**
Dubai, United Arab Emirates
+971.4.378.1700
Bangalore, India
+91.80.6715.2001
Istanbul, Turkey
+90.216.250.7374
Chat with us:
schroff.nvent.com

nVent

Our powerful portfolio of brands:
nVent.com **CADDY ERICO HOFFMAN RAYCHEM SCHROFF TRACER**

© 2024 nVent. All nVent marks and logos are owned or licensed by nVent Services GmbH or its affiliates. All other trademarks are the property of their respective owners.

nVent reserves the right to change specifications without notice.