Brand of NTN corporation

Technical data

UCF211

Bearing units



Grey cast housing, radial insert ball bearing with socket set screws,seal with slinger

KIT CONTENT

UC211G2, F211

VISUAL (S)

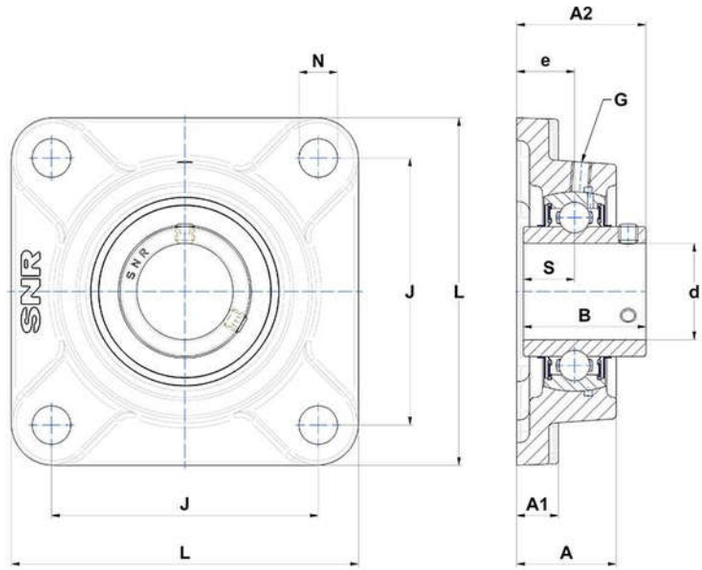

PRODUCT DEFINITION

Brand	SNR
A - Housing height	43 mm
A1 - Housing foot height / flange height	18 mm
A2 - Total height from mounting surface	58,4 mm
B - Width of Inner Ring	55,6 mm
d - Shaft diameter	55 mm

PRODUCT DEFINITION	
e - Distance mounting surface to bearing center	25 mm
G - Grease fitting	M6x1
J - Mounting holes distance	130 mm
L - Housing width / diameter	162 mm
N - Mounting hole dimension	19 mm
S - Distance front side/bearing centre	22,2 mm

PRODUCT PERFORMANCE	
C - Dynamic load rating	43550000 mN
C0 - Static load rating	29200000 mN
Operating temperature min.	253,15 °K
Operating temperature max.	373,15 °K

OTHER FEATURES	
Mass	3,31 kg
Recommended tightening torque for set screw	22 N-m