Reliance WATER CONTROLS™

Product Specification Sheet

Differential By-pass Valves

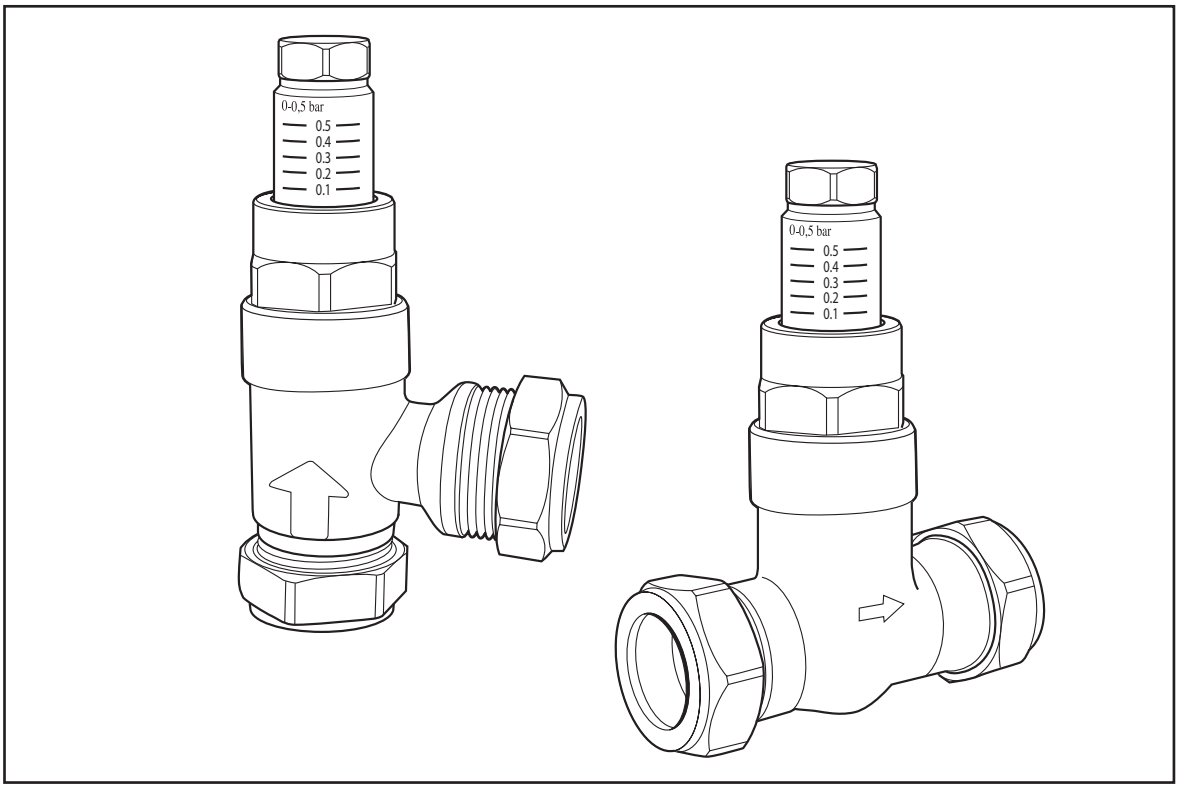

Differential by-pass valves for use in sealed or vented heating sytems.

Product Features and Benefits

- Easy to operate and set the differential opening pressure.
- Automatically stabilises circulation flow rate in pumped heating sytems when the thermostatic radiator or zone valves close thus protecting the pump from pumping against a closed head.
- Easily adjustable differential pressure setting reduces commissioning time.
- Virtually maintence free once installed.

Differential By-pass Valves

Description

The differential by-pass valve is used to stabilise the circulation, flow rate and pump pressures in central heating systems. Designed for a quick and simple installation where the valve is set using a visual dial based on your system calculations for the differential pressure. The valve is set by rotating the adjustment dial (with all radiators closed) to the desired differential opening pressure. The valve allows the optimum flow rate through the boiler to be maintained by automatically opening and allowing circulation to continue even if all the thermostatic radiators valves are closed.

Product Range

DIFF 200 005	22mm Differential By-Pass Valve (Straight)
DIFF 200 001	22mm Differential By-Pass Valve (Angled)

Materials

Valve Body:	Standard Brass
Spring:	Stainless Steel
O-Ring:	EPDM
Piston:	POM

Specifications

Maximum operating pressure:	10 bar
Differential opening pressure range:	0-0.5bar
Operating temperature:	110°C
Connection Size:	22mm

How to Specify

An differential by-pass valve made from DZR brass with corrosion protected internals, heat and age resistant diaphragm seals. Available with 22mm angled or straight compression connections.

(Include correct product code)

Dimensions

DIFF 200 005

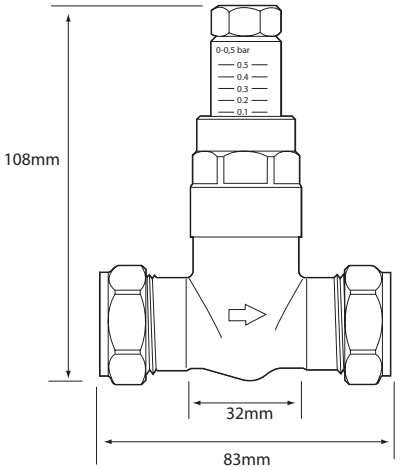

DIFF 200 001

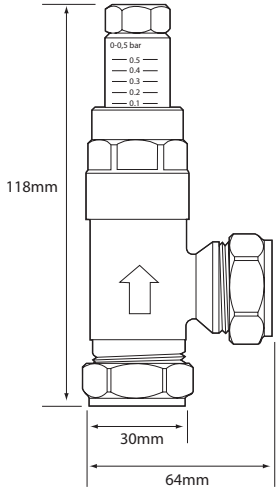

Guarantee

All Reliance products undergo strict performance tests prior to despatch, and are guaranteed against faulty materials and workmanship for one year from date of purchase. This is in addition to any statutory right.

Flow Rates

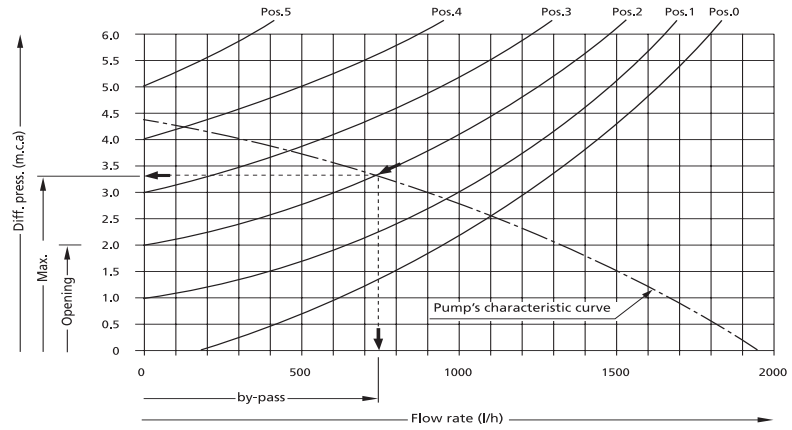

Reliance Water Controls
Worcester Road, Evesham, Worcestershire, WR11 4RA, UK
Tel: +44 (0)1386 712 400 Fax: +44 (0)1386 712 401 www.rwc.co.uk

RWC reserves the right to make changes to the product which may affect the accuracy of information contained in this leaflet

© Reliance Water Controls, Dec 2008