Photoelectric sensor

T30-SP6-LP-Q

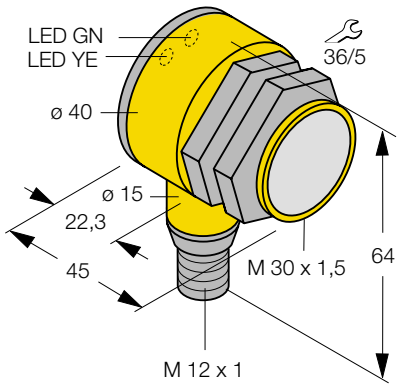

- **Retro-reflective sensor with polarising filter**
- **Connector, *eurofast*®**

Wiring diagram

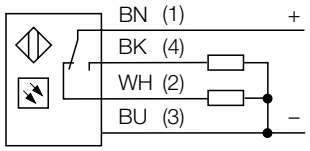

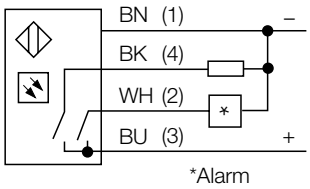

*Alarm

Type	T30-SP6-LP-Q
Ident-No.	3467700
Max. Erfassungsbereich	6,0 m
Operating mode	Retro-reflective sensor with polarising filter
Type of light	red
Wave length	680 nm
Adjustment variable 1	light and dark operate or light operate and alarm
Adjustment means 1	output programmable
Rated operational voltage (DC) U_e	10...30 VDC
Rated operational current (DC) I_e	150 mA
No-load current I_0	≤ 30,0 mA
Short-circuit protection	yes, cyclic
Reverse polarity protection	yes
Output function	complementary outputs/normally open, PNP
Max. switching frequency	≤ 0,16 kHz
Max. switch-on delay	≤100 ms
Overload trip point	>220 mA
Degree of protection	IP 67
Operation temperature	-40...70 °C
Housing style	cylindric, thread; T30
Dimensions	64,0 x 45,0 mm
Housing material	Kunststoff; PBT
Lens	acrylic
Wiring	Connectoreurocon
Supply voltage indication	LED; green
Switching status indication	LED; yellow
Error indication	LED; green flashing
Alarmausgang	LED; yellow flashing

Function principles

Retro-reflective mode sensors combine both the emitter and receiver into a single housing. The light beam from the emitter is bounced back to the receiver from a special retro-reflective target. An object is detected by interrupting this beam. Retro is the most popular mode for conveyor applications where the objects are large boxes, cartons etc.

Excess gain curve

Excess gain in relation to the distance

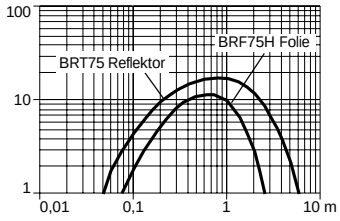

Hans Turck GmbH & Co. KG Postfach • D–45466 Mülheim an der Ruhr • Telefon 02 08/49 52-0 • Telefax 02 08/49 52-264