Capacitive proximity sensors
XT range

Catalogue



Simply easy!™

Telemecanique

Contents

Capacitive proximity sensors
XT range

Selection guide . . . . . *page 2*

- General . . . . . *pages 4 to 7*
- Cylindrical, flush mountable. Metal case . . . . . *pages 8 to 11*
- Cylindrical, non fush mountable. Plastic case . . . . . *pages 12 to 17*
- Product reference index . . . . . *page 18*

Capacitive proximity sensors

XT range

Detection of insulated or conductive materials

Applications: detection of any object irrespective of material or conductivity, for example: metals, minerals, wood, plastic, glass, cardboard, fluids, etc.

Cylindrical sensors, flush mountable, metal case

Detection of insulated or conductive materials: presence, passage of paper, cardboard, glass, etc.



Cylindrical sensors, non flush mounta

Detection of insulated or conductive mater
Liquid level control



Diameter		M12 x 1	M18 x 1	M30 x 1.5	Plain: Ø 32	M18 x 1	M30 x 1.5
Case		Nickel copper alloy				Plastic	
Sensing distance (Sn) in mm	**Flush mountable in metal sensors**	2	5	10	15	–	
	Non flush mountable in metal sensors	–				8	15
Degree of protection		IP 67 IP 65				IP 67 IP 65	
Supply	⎓	•	•	•	–	•	•
	∿	–	•	•	•	•	•
Connection	**Pre-cabled**	•	•	•	•	•	•
	Connector	•	•	•	–	•	–
	Screw terminals	–	–	–	–	–	–
Type reference		**XT512B1●**	**XT518B1●**	**XT530B1●**	**XT132B1FAL2**	**XT218A1●**	**XT230A1●**
Pages		8				12	

Capacitive proximity sensors
XT range

Presentation

Advantages

■ No physical contact with the object to be detected.

■ Solid-state product, no moving parts (service life not related to number of operating cycles).

■ Detection of any object irrespective of material or conductivity, for example: metals, minerals, wood, plastic, glass, cardboard, leather, ceramic, fluids, etc.

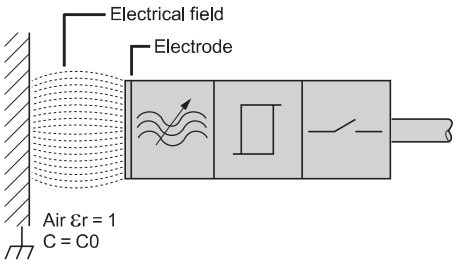

Operating principle

An electrical field is created between 2 electrodes on the front face of the sensor.
These electrodes constitute a capacitor with a capacitance of:
$C = \varepsilon 0 * \varepsilon r * A/d$ where:
$\varepsilon 0 = 8.854\ 187$ pF/m (permittivity in free space)
εr: relative permittivity of the material present between the 2 electrodes
A: dimensions of electrodes
d: distance between electrodes

All materials where $\varepsilon r > 2$ will be detected.

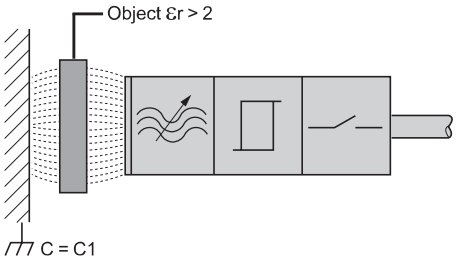

When an object of any material ($\varepsilon r > 2$) passes the sensing face of the sensor, it modifies the coupling capacitance (C1).
This variation in capacitance (C1 > C0) instigates the starting of the oscillator which, in turn, causes the output driver to operate and provides an output signal.

Types of sensor

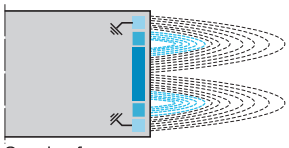
Sensing face

Sensors flush mountable in support

The special feature of these versions is the shape of the electrical field which is rectilinear and confined within the dimensions of the product.
Cylindrical and block type models used for the detection of insulated materials (wood, plastic, cardboard, glass…), conductive materials (metal…) or liquid through an insulated partition (glass, plastic…) with a maximum thickness of 4 mm.

These products are recommended for:
- comparatively short detection distances,
- applications requiring flush mounting of the sensor,
- detection through a partition (example: detection of glass through cardboard),
- side by side mounting.

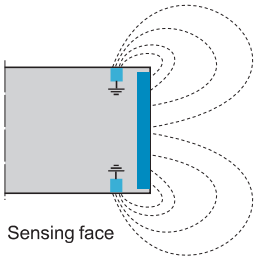
Sensing face

Sensors non flush mountable in support

Cylindrical models (plastic case).
The spherical shape of the electrical field enables detection of any type of material whether it be solid, liquid, granular… (metal, water, oil, plastic pellets, powder, flour…).

Detection can be achieved through a partition or by direct contact (immersion) of the active surface with the object to be detected.
Distances to be adhered to around the sensing face. (See characteristics page 17).

Mounting precautions

Non flush mountable models cannot be flush mounted in their support.
The non flush mountable models require a free zone around the active head.
(See page 17).

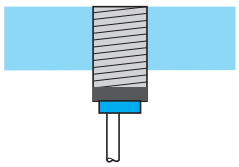
Flush mountable model

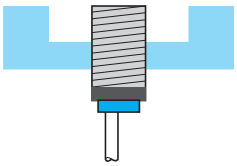
Non flush mountable model

Capacitive proximity sensors
XT range

Terminology

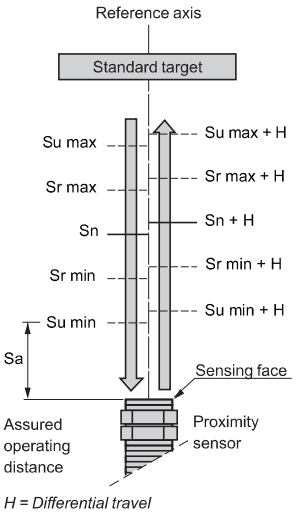

H = Differential travel

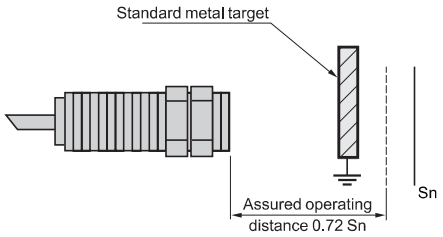

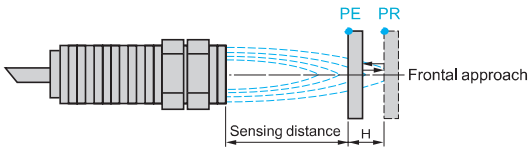

PE = pick-up point, the target is detected
PR = drop-out point, the target is no longer detected

Definitions

In order to ensure that customers can make reliable product comparisons and selection, the standard IEC 60947-5-2 defines various sensing distances, such as:

Nominal sensing distance (Sn)
The rated operating distance for which the sensor is designed. It does not take into account any variations (manufacturing tolerances, temperature, voltage).

Effective sensing distance (Sr)
The effective sensing distance is measured at the rated voltage (Un) and the rated ambient temperature (23 °C ± 5 °C)
It must be between 90% and 110% of Sn.

Usable sensing distance (Su)
The usable sensing distance is measured at the limits of the permissible variations in the ambient temperature and at a supply voltage equal to 85% and 110% of the rated voltage.
It must be between 80% and 120% of Sr.

Assured operating distance (Sa)
This is the operating zone of the sensor.
The assured operating distance is between 0 and 72% of Sn.

Standard metal target

The standard IEC 60947-5-2 defines the standard metal target as a square mild steel (Fe 360) plate, 1 mm thick.
The side dimension of the plate is either equal to the diameter of the circle engraved on the sensing face of the sensor or 3 times the nominal sensing distance (Sn).

Repeat accuracy

The repeat accuracy (R) is the repeatability of the sensing distance between successive operations. Readings are taken over a period of time whilst the sensor is subjected to voltage and temperature variations: 8 hours, 10 to 30 °C, Un ± 5%.
It is expressed as a percentage of the effective sensing distance Sr.

Differential travel

The differential travel (H) or hysteresis, is the distance between the operating point, as the standard metal target moves towards the sensor, and the release point, as it moves away.
This hysteresis is essential for the stable operation of the sensor.

Capacitive proximity sensors
XT range

Terminology *(continued)*

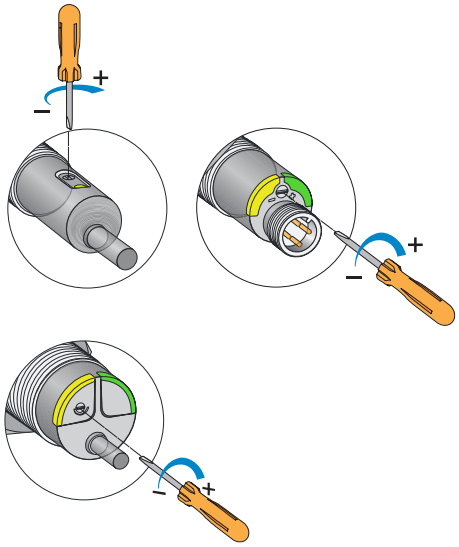

Sensitivity of the sensor

All our sensors incorporate a sensitivity adjustment potentiometer. This enables the sensitivity of the sensor to be adjusted to suit the type of object to be detected.

Depending on the sensor version, the sensitivity adjustment potentiometer is either mounted on the side or the rear.

The sensors are factory preset for nominal sensitivity.

Depending on the application, adjustment of the sensitivity could be necessary as follows:
- increasing the sensitivity for objects which have a weak influence (weaker): paper, cardboard, glass, plastic,
- decreasing the sensitivity for objects which have a strong influence (stronger): metals, liquids.

However, in the event of severe variations in the ambient conditions, do not increase the sensitivity of the sensor such that it is set to its maximum operating limits.

An increase in sensitivity causes an increase in the switching hysteresis.

Operating distances

The operating distance of the sensor is related to the dielectric constant (εr) of the object material to be detected.
The higher the value of εr, the easier the detection of the object will be.

The assured operating distance depends on the object material: Sa = Sn x Fc
Sa = assured operating distance,
Sn = nominal sensing distance of the sensor,
Fc = correction factor related to the object material.

Example: sensor **XT530B1PAL2** used to detect a rubber object.
Sn = 10 mm, Fc = 0.3.
Assured operating distance Sa = 10 x 0.3 mm.

The list below indicates the dielectric constant values of the most common object materials, together with their correction factors (Fc) for the nominal sensing distance of the sensor.

Material	εr	Fc
Air	1	0
Acetone	20	0.8
Alcohol	24	0.85
Ammonia	15…25	0.75…0.85
Cement (powder)	4	0.35
Cereals	3…5	0.3…0.4
Epoxy resin	4	0.36
Ethylene glycol	38	0.95
Flour	2.5…3	0.2…0.3
Glass	3...10	0.3...0.7
Marble	6...7	0.5...0.6
Mica	6…7	0.5…0.6
Nylon	4…5	0.3…0.4
Oil	2.2	0.2
Paper	2…4	0.2…0.3
Paraffin	2…2.5	0.2

Material	εr	Fc
Petrol	2.2	0.2
Plexiglass	3.2	0.3
Polyester resin	2.8…8	0.2…0.6
Polystyrene	3	0.3
Porcelain	5…7	0.4…0.5
Powdered milk	3.5...4	0.3...0.4
Rubber	2.5…3	0.3
Sand	3...5	0.3...0.4
Salt	6	0.5
Sugar	3	0.3
Teflon	2	0.2
Vaseline	2...3	0.2...0.3
Water	80	1
Wood (damp)	10…30	0.7…0.9
Wood (dry)	2…7	0.2…0.6

Capacitive proximity sensors
XT range

Environment

■ **Electromagnetic interference**
The sensors undergo electromagnetic interference testing in accordance with the recommendations of standard IEC 60947-5-2 (electrostatic discharges, radiated electromagnetic fields, fast transients, impulse voltages).

■ **Thermal influences**
It is advisable to remain within the values stated on the characteristic pages so as to avoid sensing distance drift and possible incorrect operation of the sensor.

■ **Chemical agents**
To ensure a long service life, it is essential that any chemicals coming into contact with the case of the sensor are non corrosive.

■ **Earthing**
Earthing of an object that has high conductivity increases the sensing distance.

Additional information relating to outputs

Refer to corresponding pages relating to inductive proximity sensors for:
■ Terminology.
■ Details and specific aspects of 2-wire and 3-wire type connection.
■ Connecting several sensors in series or parallel.

Application examples:

Bottle filling

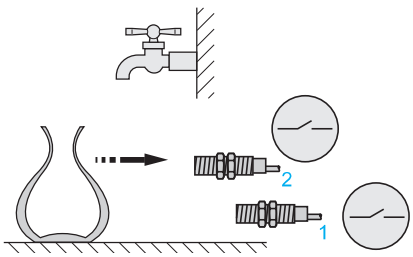

■ **Bottle arrival**

■ Bottles are fed on a conveyor for filling.
Sensors 1 and 2 are in an unoperated state.
Adjustment:
- sensor 1 is adjusted to detect the bottle,
- sensor 2 is adjusted to detect the water in the bottle.

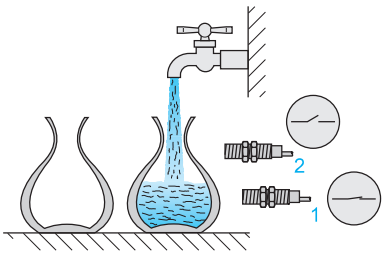

■ **Bottle filling**

As soon as the bottle enters the detection zone of sensor 1,
the filling operation commences.
Sensor 2 remains in the unoperated state.

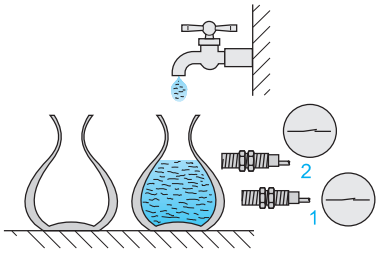

■ **Filling complete**

Sensor 2 detects that the required level has been reached and stops further filling.

Reminder: the wall of the container must be non metallic and its thickness ≤ 4 mm

Livestock feeder filling

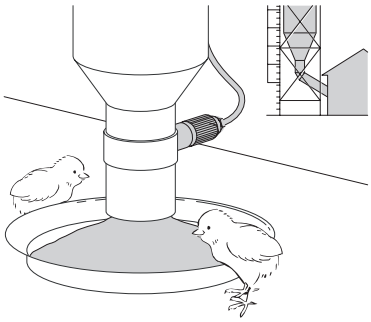

Capacitive technology is particularly suited for the detection of feed levels in automatic dispensers for livestock. Any type of feed can be detected (pellets, powders, broths, grains, pastas, etc.).
The materials used, as well as the degree of protection of the sensor, have been specially selected to tolerate the acidic and dusty environments associated with this application.

Capacitive proximity sensors
XT range
Cylindrical, flush mountable. Metal case
AC or DC supply



XT512B1P●M12



XT512B1P●L2



XT518B1●●M12



XT518B1●●L2



XT512B1P●M12



XT512B1P●L2



XT132B1FAL2

Ø 12, threaded M12 x 1, nickel copper alloy

Sensing distance (Sn)	Function	Output	Connection	Reference	Weight
mm					kg
3-wire ⎓ 12...24 V					
2	NO	PNP	Pre-cabled (L = 2 m)	**XT512B1PAL2**	0.070
			M12 connector	**XT512B1PAM12**	0.040
	NC	PNP	Pre-cabled (L = 2 m)	**XT512B1PBL2**	0.070
			M12 connector	**XT512B1PBM12**	0.040

Ø 18, threaded M18 x 1, nickel copper alloy

Sensing distance (Sn)	Function	Output	Connection	Reference	Weight
mm					kg
4-wire ⎓ 12...24 V					
5	NO/NC	PNP	Pre-cabled (L = 2 m)	**XT518B1PCL2**	0.150
			M12 connector	**XT518B1PCM12**	0.075
3-wire ⎓ 12...24 V					
5	NO	PNP	Pre-cabled (L = 2 m)	**XT518B1PAL2**	0.150
2-wire ∿ 24-240 V					
5	NO	–	Pre-cabled (L = 2 m)	**XT518B1FAL2**	0.150
	NC	–	Pre-cabled (L = 2 m)	**XT518B1FBL2**	0.150

Ø 30, threaded M30 x 1.5, nickel copper alloy

Sensing distance (Sn)	Function	Output	Connection	Reference	Weight
mm					kg
4-wire ⎓ 12...24 V					
10	NO/NC	PNP	Pre-cabled (L = 2 m)	**XT530B1PCL2**	0.270
			M12 connector	**XT530B1PCM12**	0.150
3-wire ⎓ 12...24 V					
10	NO	PNP	Pre-cabled (L = 2 m)	**XT530B1PAL2**	0.270
2-wire ∿ 24-240 V					
10	NO	–	Pre-cabled (L = 2 m)	**XT530B1FAL2**	0.270
	NC	–	Pre-cabled (L = 2 m)	**XT530B1FBL2**	0.270

Ø 32, plain, nickel copper alloy

Sensing distance (Sn)	Function	Output	Connection	Reference	Weight
mm					kg
2-wire ∿ 24-240 V					
15	NO		Pre-cabled (L = 2 m)	**XT132B1FAL2** *(1)*	0.400

(1) Mounting accessory included with sensor.

Accessories

Fixing and protection accessories, fuses and fuse terminal block: see page 12.

Capacitive proximity sensors
XT range
Cylindrical, flush mountable. Metal case
AC or DC supply

Characteristics

Sensor type			M12 XT512●	M18 XT518●		M30 XT530●		Ø 32 XT132●
			3-wire ⎓	3-wire ⎓ 4-wire ⎓	2-wire ∿	3-wire ⎓ 4-wire ⎓	2-wire ∿	2-wire ∿
Product certifications			CE, cULus, UKCA					
Conformity to standards			IEC 60947-5-2, UL 61010-1					
Connection	Pre-cabled, length **2 m**		●	●	●	●	●	●
	Connector, **M12**		●	●	–	●	–	–
Main characteristics								
Nominal sensing distance (Sn)	Conforming to IEC 60947-5-2	mm	2	5		10		15
Assured operating distance Sa	Conforming to IEC 60947-5-2	mm	0…1.44	0…3.60	0…3.60	0…7.2	0…7.2	0…11
Adjustment zone		mm	0.5…5	1…8	1…5	2…20	2…15	0…20
Repeat accuracy		Sr	< 5 %					
Differential travel		Sr	< 1…20 %					
Output characteristics								
Output state indication			Yellow LED					
Switching capacity		mA	200	200	300	200	300	300
Maximum switching frequency		Hz	40	40	15	25	10	10
Protection against short-circuits			●	●	– *(1)*	●	– *(1)*	– *(1)*
Voltage drop		V	≤ 2	≤ 2	≤ 6	≤ 2	≤ 6	≤ 10
Residual current, open state		mA	< 0.1	< 0.1	< 5	< 0.1	< 5	< 5
Delays	First-up	ms	≤ 300	≤ 300	≤ 200	≤ 300	≤ 200	≤ 200
	Response	ms	≤ 15	≤ 15	≤ 30	≤ 15	≤ 30	≤ 30
	Recovery	ms	≤ 15	≤ 15	≤ 30	≤ 15	≤ 30	≤ 30
Supply								
Rated supply voltage		V	⎓ 12…24	⎓ 12…24	∿ 24 - 240 50/60 Hz	⎓ 12…24	∿ 24 - 240 50/60 Hz	∿ 24 - 240 50/60 Hz
Voltage limits (including ripple)		V	⎓ 10…30	⎓ 10…30	∿ 20 - 264 50/60 Hz	⎓ 10…30	∿ 20 - 264 50/60 Hz	∿ 20 - 264 50/60 Hz
Current consumption, no-load		mA	< 15	< 15	< 3 *(2)*	< 15	< 3 *(2)*	< 4
Protection against reverse polarity			Yes	Yes	–	Yes	–	–
Environment								
Materials	Case		Nickel copper alloy					
	Cable		PVC					
	Number and c.s.a. of wires		3 x 0.34 mm²	3 x 0.34 mm² or 4 x 0.34 mm²	2 x 0.5 mm²	3 x 0.34 mm² or 4 x 0.34 mm²	2 x 0.5 mm²	2 x 0.5 mm²
Degree of protection	Conforming to IEC 60529 and IEC 60947-5-2		IP 67 IP 65					IP 67 IP 65
Storage and operating temperature		°C	- 25…+ 70					
Vibration resistance	Conforming to IEC 60068-2-6		10 gn, ± 1 mm (f = 10…55 Hz)					
Shock resistance	Conforming to IEC 60068-2-27		30 gn, 11 ms					30 gn, 6 ms
Resistance to electromagnetic interference								
Electrostatic discharges	Conforming to IEC 61000-4-2	kV	8 (air) / 4 (contact)					
Radiated electromagnetic fields	Conforming to IEC 61000-4-3	V/m	10					
Fast transients	Conforming to IEC 61000-4-4	kV	2					

(1) These sensors do not incorporate overload or short-circuit protection and therefore, it is essential to connect a "quick-blow" fuse in series with the load (see page 12).

(2) At ∿ 240 V.

Capacitive proximity sensors

XT range

Cylindrical, flush mountable. Metal case

AC or DC supply

Dimensions

M12, pre-cabled

XT512B1●●L2

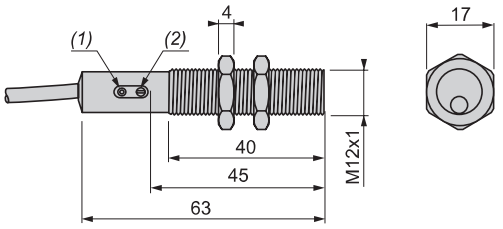

M12, M12 connector

XT512B1●●M12

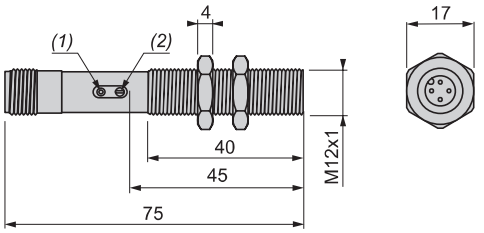

M18, pre-cabled

XT518B1●●L2

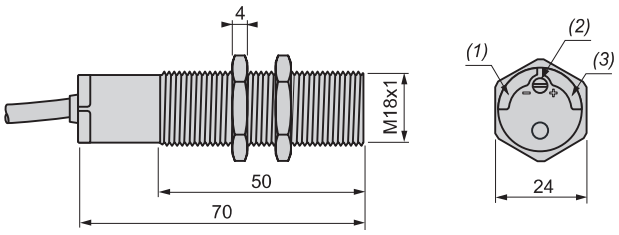

M18, M12 connector

XT518B1●●M12

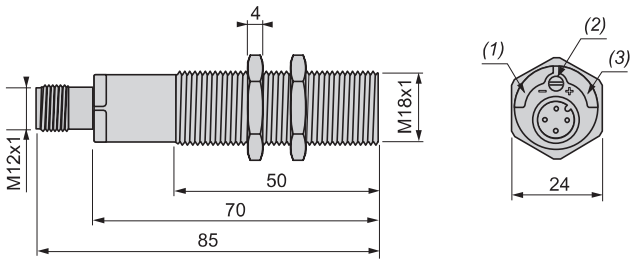

M30, pre-cabled

XT530B1●●L2

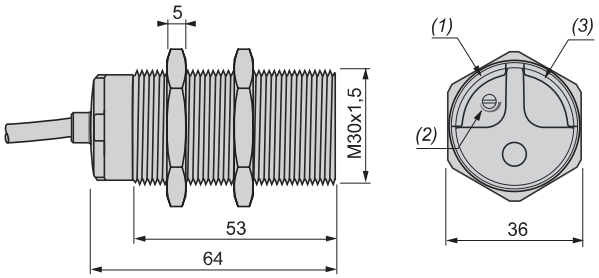

M30, M12 connector

XT530B1●●M12

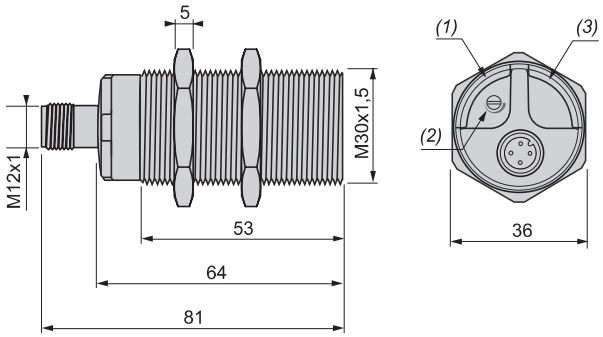

Ø 32, plain, pre-cabled

XT132B1FAL2

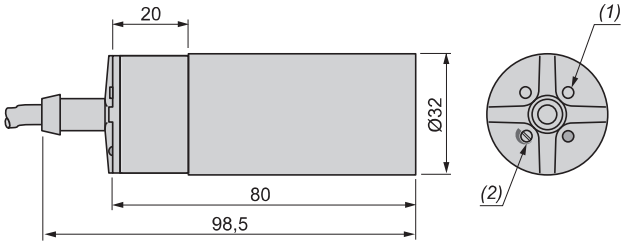

Mounting accessory (included with sensor XT132B1FAL2)

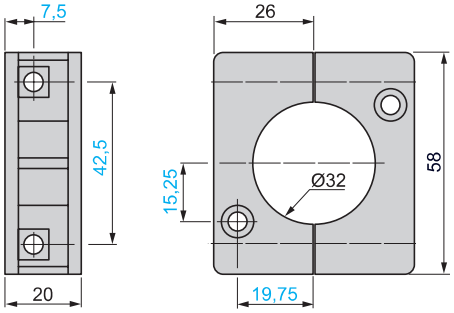

(1) Output status LED (yellow).
(2) Adjustment potentiometer (sensivity).
(3) Power ON LED (green).

Capacitive proximity sensors
XT range
Cylindrical, flush mountable. Metal case
AC or DC supply

Wiring schemes

Connector version

M12 connector



4-wire ⎓, PNP
NO + NC output, M12

XT518B1PCM12
XT530B1PCM12

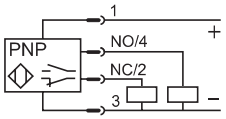

3-wire ⎓, PNP
NO output, M12

XT512B1PAM12

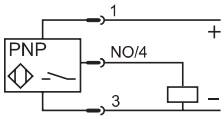

3-wire ⎓, PNP
NC output, M12

XT512B1PBM12

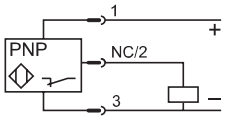

Pre-cabled version

Wire color

BU: Blue
BN: Brown
BK: Black
WH: White
YE/GN: Yellow/green

4-wire ⎓, PNP
NO + NC output,
pre-cabled

XT518B1PCL2
XT530B1PCL2

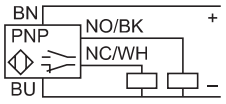

3-wire ⎓, PNP
NO output, pre-cabled

XT512B1PAL2
XT518B1PAL2
XT530B1PAL2

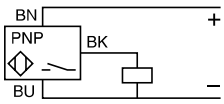

3-wire ⎓, PNP
NC output, pre-cabled

XT512B1PBL2

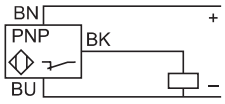

2-wire ∿
NO output

XT518B1FAL2
XT530B1FAL2
XT132B1FAL2

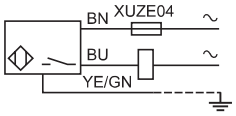

2-wire ∿
NC output

XT518B1FBL2
XT530B1FBL2

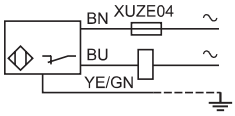

Adjustment

Sensitivity adjustment

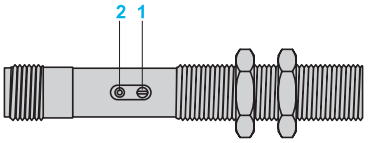

Adjustment from the side for	**XT512●●●●M12** **XT512●●●●L2**
Adjustment from the rear for	**XT518●●●●M12** **XT5●●●●●●L2** **XT530●●●●M12** **XT530●●●●M12** **XT1●●●●●●L2**

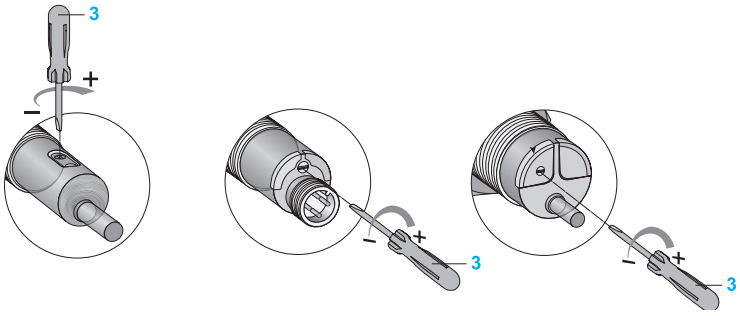

1 Adjustment potentiometer
2 LED
3 Adjustment using suitable screwdriver (included with sensor)

Setting-up

Minimum mounting distances (mm)

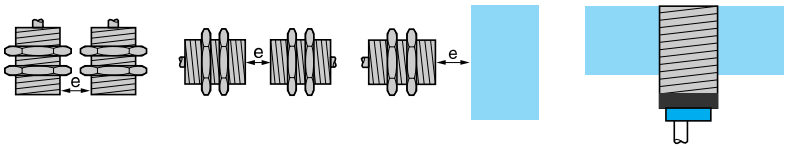

	Side by side	Face to face	Facing a metal object	Mounted in support
XT5M12 flush mountable	e ≥ 0	e ≥ 6 x Sn	e ≥ 3 x Sn	–
XT5M18 flush mountable	e ≥ 0	e ≥ 6 x Sn	e ≥ 3 x Sn	–
XT5M30 flush mountable	e ≥ 0	e ≥ 6 x Sn	e ≥ 3 x Sn	–
XT132 flush mountable	e ≥ 35	e ≥ 6 x Sn	e ≥ 3 x Sn	–

Fixing nut tightening torque: ***XT512****: 6 N.m (53 lb-in),* ***XT518****: 15 N.m (133 lb-in),* ***XT530****: 40 N.m (354 lb-in).*

Capacitive proximity sensors
XT range
Cylindrical, non flush mountable. Plastic case
AC or DC supply


XT218A1PCM12


XT230A1●●L2


XT230A2MDB


XT232A1F●L2


XT234A1PAL2


XUZA118

Ø 18, threaded M18 x 1

Sensing distance (Sn) (mm)	Function	Output	Connection	Reference	Weight kg
4-wire ⎓ 12…24 V					
8	NO/NC	PNP	M12 connector	**XT218A1PCM12**	0.060
3-wire ⎓ 12…24 V					
8	NO	PNP	Pre-cabled (L = 2 m)	**XT218A1PAL2**	0.140
		NPN	Pre-cabled (L = 2 m)	**XT218A1NAL2**	0.140
2-wire ∿ 24-240 V					
8	NO	–	Pre-cabled (L = 2 m)	**XT218A1FAL2**	0.140

Ø 30, threaded M30 x 1.5

Sensing distance (Sn) (mm)	Function	Output	Connection	Reference	Weight kg
4-wire ⎓ 12…24 V					
15	NO/NC	PNP	M12 connector	**XT230A1PCM12**	0.100
3-wire ⎓ 12…24 V					
15	NO	PNP	Pre-cabled (L = 2 m)	**XT230A1PAL2**	0.200
		NPN	Pre-cabled (L = 2 m)	**XT230A1NAL2**	0.200
2-wire ∿ 24-240 V					
15	NO	–	Pre-cabled (L = 2 m)	**XT230A1FAL2**	0.200
	NC	–	Pre-cabled (L = 2 m)	**XT230A1FBL2**	0.200

Ø 30, threaded M30 x 1.5, Application series

Sensing distance (Sn) (mm)	Function	Connection	Reference	Weight kg
2-wire ∿ 24-240 V/ ⎓ 24 V				
0...15, adjustable	NO or NC, selectable	Screw terminals	**XT230A2MDB**	0.100

Applications: sensor **XT230A2MDB** is particularly suited to automatic feed systems for livestock. It enables detection of the level of all types of feed: pellets, grains, pastas, broths and powders.

Ø 32, plain *(1)*

Sensing distance (Sn) (mm)	Function	Connection	Reference	Weight kg
2-wire ∿ 24-240 V				
20	NO	Pre-cabled (L = 2 m)	**XT232A1FAL2**	0.350
	NC	Pre-cabled (L = 2 m)	**XT232A1FBL2**	0.350

Ø 34, plain *(1)*

Sensing distance (Sn) (mm)	Function	Connection	Reference	Weight kg
3-wire ⎓ 12-24 V				
20	NO PNP	Pre-cabled (L = 2 m)	**XT234A1PAL2**	0.350

Accessories for capacitive sensors XT1●, XT2● and XT5●

Fixing accessories

Description	For use with sensor	Reference	Weight kg
90° fixing bracket	Ø 12	**XXZ12**	0.025
	Ø 18	**XUZA118**	0.045
	Ø 30	**XXZ30**	0.115

Protection accessories

Description	For use with sensor	Reference	Weight kg
Threaded sleeve	Ø 30, threaded M30 x 1.5	**XTAZ30**	0.035

Fuses (for unprotected 2-wire ∿ sensors)

Description	Type	Sold in lots of	Unit reference	Weight kg
Cartridge fuses 5 x 20	0.4 A "quick-blow"	10	**XUZE04**	0.001
	0.63 A "quick-blow"	10	**XUZE06**	0.001
	0.8 A "quick-blow"	10	**XUZE08**	0.001

Fuse terminal block (Schneider Electric product)

Description	Sold in lots of	Unit reference	Weight kg
Fuse terminal block for 5 x 20 fuses, black	50	**NSYTRV42SF5**	0.018

Capacitive proximity sensors
XT range
Cylindrical, non flush mountable. Plastic case
AC or DC supply

Characteristics

Sensor type			M18			M30				Ø 32	Ø 34
			XT218A1			XT230A1			XT230A2	XT232A	XT234A
			4-wire ⎓	3-wire ⎓	2 -wire ∼	4-wire ⎓	3-wire ⎓	2-wire ∼	2-wire ∼	2-wire ∼	3-wire ⎓
Product certifications			CE, cULus								
Conformity to standards			IEC 60947-5-2, UL 61010-1								
Connection	Pre-cabled, length **2 m**		–	●	●	–	●	●	–	●	●
	Connector, **M12**		●	–	–	●	–	●	–	–	–
	Screw terminals, 2 x M3		–	–	–	–	–	–	●	–	–
Main characteristics											
Nominal sensing distance (Sn)	IEC 60947-5-2	**mm**	8			15			15	20	20
Assured operating distance (Sa)	IEC 60947-5-2	**mm**	0…5.8			0…11			0…11	0…15	0…15
Adjustment zone		**mm**	0…12			0…17			0... 17	0…22	0…22
Repeat accuracy		**Sr**	< 5%								
Differential travel		**Sr**	< 1…20%						< 1…15%	< 1…20%	
Output characteristics											
Output state indication			Yellow LED								
Switching capacity		**mA**	2 x 200	200	300	2 x 200	200	300	300	300	200
Maximum switching frequency		**Hz**	30	30	15	50	50	15	40	15	15
Protection against short-circuits			●	●	– *(1)*	●	●	– *(1)*	– *(1)*	– *(1)*	●
Voltage drop		**V**	< 2.5	< 2.5	< 10	< 2.5	< 2.5	< 10	< 2	< 10	< 2.5
Residual current, open state		**µA**	≤ 100	≤ 100	–	≤ 100	≤ 100	–	< 120	–	≤ 100
Delays	First-up	**ms**	< 100	< 100	< 200	< 100	< 100	< 200	< 100	< 200	< 100
	Response	**ms**	< 15	< 15	< 30	< 15	< 10	< 30	< 10	< 30	< 15
	Recovery	**ms**	< 15	< 15	< 30	< 15	< 10	< 30	< 10	< 30	< 15
Supply											
Rated supply voltage		**V**	⎓ 12…24		∼ 24…240 50/60 Hz	⎓ 12…24		∼ 24…240 50/60 Hz	∼ 24…240 50/60 Hz ⎓ 24	∼ 24…240 50/60 Hz	⎓ 12…24
Voltage limits (including ripple)		**V**	⎓ 10…30		∼ 20…265	⎓ 10…30		∼ 20…265	∼ 20…265	∼ 20…265	⎓ 10…30
Current consumption, no-load	24 V	**mA**	< 25	< 15	–	< 25	< 15	–	–	–	< 25
	240 V	**mA**	–	–	< 4	–	–	< 4	< 3	< 4	–
Protection against reverse polarity			Yes	Yes	–	Yes	Yes	–	–	–	Yes
Environment											
Materials	Case		Plastic								
	Cable		PVC						–	PVC	
	Number and c.s.a. of wires (mm^2)		–	3 x 0.34	2 x 0.5	–	3 x 0.34	2 x 0.5	2 x 1 (min.) *(2)* 2 x 2.5 (max.)	2 x 0.5	3 x 0.34
Degree of protection	Conforming to IEC 60529		IP 67						IP 65	IP 67	IP 67
Storage temperature		**°C**	- 10…+ 60						- 40…+ 85	- 10…+ 60	- 10…+ 60
Operating temperature		**°C**	- 10…+ 60						- 20…+ 70	- 10…+ 60	- 10…+ 60
Vibration resistance	IEC 60068-2-6		10 gn, ± 1 mm (f = 10…55 Hz)								
Shock resistance	IEC 60068-2-27		30 gn, 11 ms								
Resistance to electromagnetic interference											
Electrostatic discharges	IEC 61000-4-2	**kV**	8 (air) / 4 (contact)								
Radiated electromagnetic fields	IEC 61000-4-3	**V/m**	3								
Fast transients	IEC 61000-4-4	**kV**	2								

(1) These sensors do not incorporate overload or short-circuit protection and therefore, it is essential to connect a "quick-blow" fuse in series with the load (see page 12).

(2) The supply cable can have a 14 mm maximum diameter sheath.

Application example (XT230A2MDB)

Automatic feed system for livestock

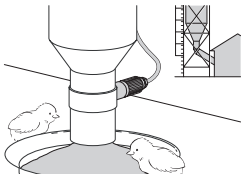

Capacitive proximity sensors

XT range

Cylindrical, non flush mountable. Plastic case

AC or DC supply

Dimensions

M18, pre-cabled

XT218A1●●L2

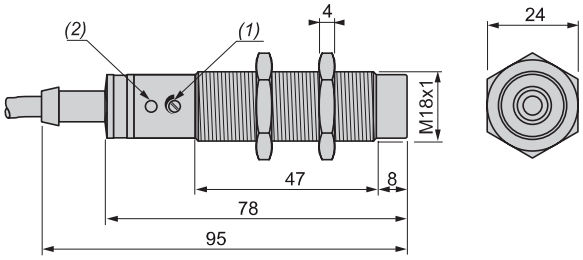

(1) Adjustment potentiometer.
(2) LED.

M18, M12 connector

XT218A1PCM12

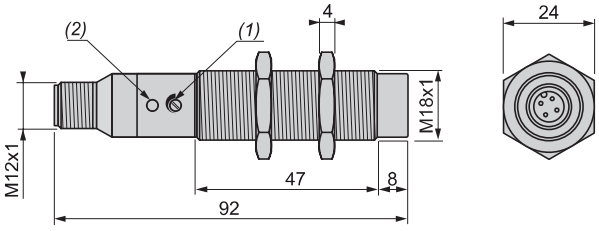

(1) Adjustment potentiometer.
(2) LED.

M30, pre-cabled

XT230A1●●L2

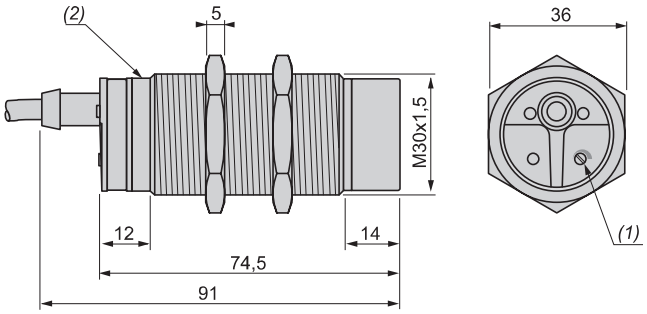

(1) Adjustment potentiometer.
(2) LED.

M30, M12 connector

XT230A1PCM12

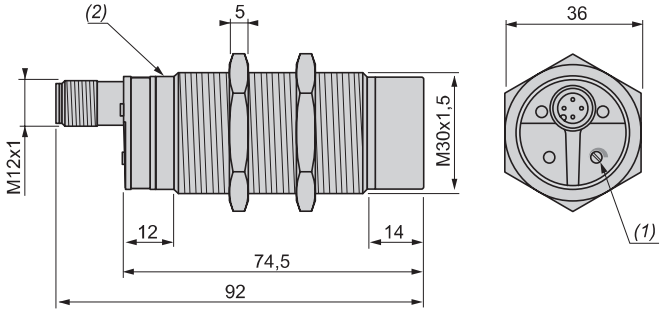

(1) Adjustment potentiometer.
(2) LED.

Dimensions *(continued)*

M30, screw terminals

XT230A2MDB

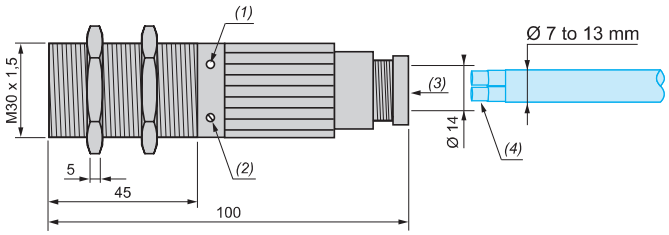

(1) LED.
(2) Potentiometer.
(3) Entry incorporating cable gland.
(4) 2 x 1 mm² to 2.5 mm² wires max.

Ø 32, plain, pre-cabled

XT232A1FAL2, XT232A1FBL2

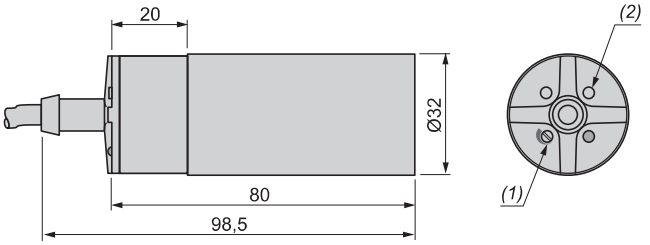

(1) Adjustment potentiometer.
(2) LED.

Ø 34, plain, pre-cabled

XT234A1PAL2

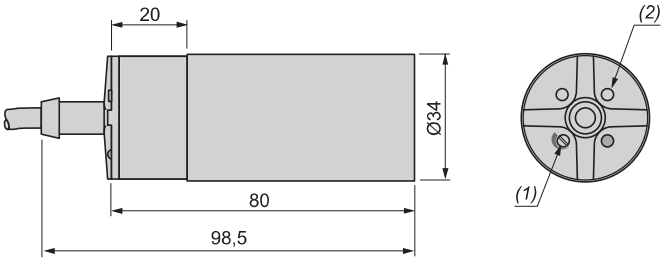

(1) Adjustment potentiometer.
(2) LED.

Capacitive proximity sensors
XT range
Cylindrical, non flush mountable. Plastic case
AC or DC supply

Dimensions *(continued)*

Accessories

Mounting accessory (included with sensor XT232A1F●L2)

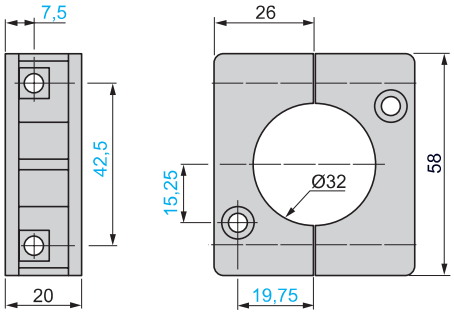

Mounting accessory (included with sensor XT234A1PAL2)

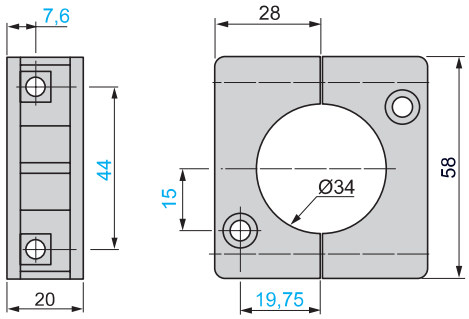

XUZA118

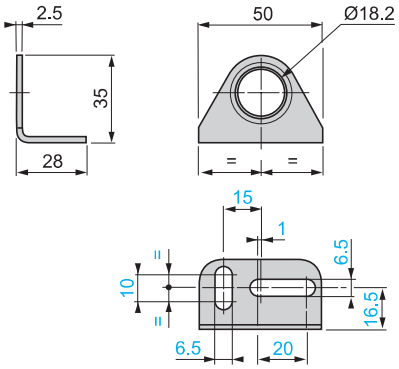

XXZ12, XXZ30

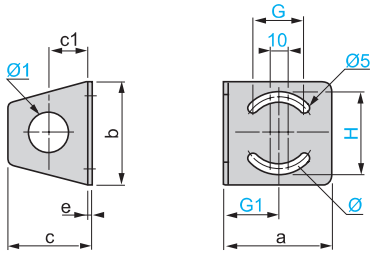

XXZ	a	b	c	c1	e	H	G	G1	Ø	Ø1
12	35	40	33	18	2	31	18	18	25	13
30	67	65	52	25	3	51	35	33	50	31

XTAZ30

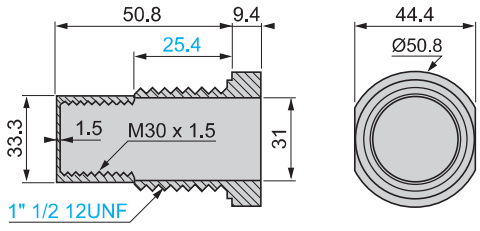

Schemes, adjustment, setting-up

Capacitive proximity sensors

XT range

Cylindrical, non flush mountable. Plastic case

AC or DC supply

Wiring schemes

Connector version

M12 connector	4-wire ⎓, PNP NO + NC output, M12
	**XT218A1PCM12** **XT230A1PCM12**

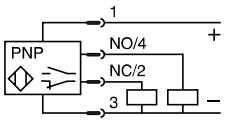

Screw terminal version

2-wire ≂ NO or NC output, selectable
XT230A2MDB

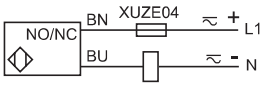

BN: Brown
BU: Blue

Pre-cabled version

Wire color	3-wire ⎓, PNP NO output	3-wire ⎓, NPN NO output	2-wire ∿ NO output	2-wire ∿ NC output
BU: Blue BN: Brown BK: Black	**XT218A1PAL2** **XT230A1PAL2** **XT234A1PAL2**	**XT218A1NAL2** **XT230A1NAL2**	**XT218A1FAL2** **XT230A1FAL2** **XT232A1FAL2**	**XT230A1FBL2** **XT232A1FBL2**

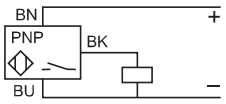

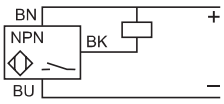

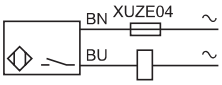

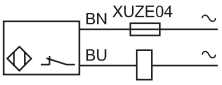

Adjustment

Sensitivity adjustment

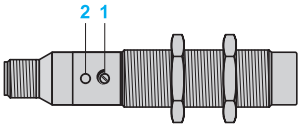

Adjustment from the side for	**XT218A1** **XT230A2**
Adjustment from the rear for	**XT230A1** **XT232A1** **XT234A1**

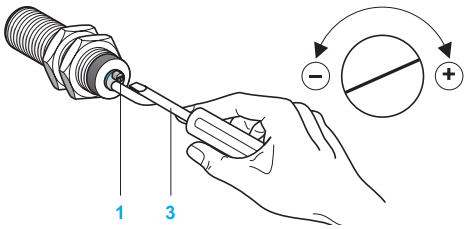

1 Adjustment potentiometer
2 LED
3 Adjustment using suitable screwdriver (included with sensor)

Setting-up

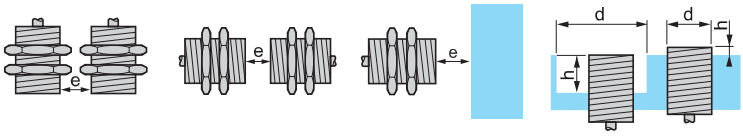

Minimum mounting distances (mm)	Side by side	Face to face	Facing a metal object	Mounted in support	
XT218A1, M18 x 1 non flush mountable	e ≥ 40	e ≥ 6 Sn	e ≥ 3 Sn	d ≥ 60	h ≥ 20
XT230A1, M30 x 1.5 non flush mountable	e ≥ 60	e ≥ 6 Sn	e ≥ 3 Sn	d ≥ 90	h ≥ 30
XT230A2, M30 x 1.5 non flush mountable	e ≥ 16	e ≥ 90 Sn	e ≥ 45 Sn	d ≥ 90	h ≥ 30
XT232A1, Ø 32 plain, non flush mountable	e ≥ 65	e ≥ 6 Sn	e ≥ 3 Sn	d ≥ 100	h ≥ 30
XT234A1, Ø 34 plain, non flush mountable	e ≥ 65	e ≥ 65 Sn	e ≥ 35 Sn	d ≥ 100	h ≥ 30

*Fixing nut tightening torque: **XT218A**: 3 N.m (26 lb-in), **XT230A**: 8 N.m (71 lb-in).*
*Cable gland tightening torque: **XT230A2**: 4 N.m (35 lb-in).*

Capacitive proximity sensors
XT range
Product reference index

N	
NSYTRV42SF5	12

X	
XT132B1FAL2	8
XT218A1FAL2	12
XT218A1NAL2	12
XT218A1PAL2	12
XT218A1PCM12	12
XT230A1FAL2	12
XT230A1FBL2	12
XT230A1NAL2	12
XT230A1PAL2	12
XT230A1PCM12	12
XT232A1FAL2	12
XT232A1FBL2	12
XT234A1PAL2	12
XT512B1PAL2	8
XT512B1PAM12	8
XT512B1PBL2	8
XT512B1PBM12	8
XT518B1FAL2	8
XT518B1FBL2	8
XT518B1PAL2	8
XT518B1PCL2	8
XT518B1PCM12	8
XT530B1FAL2	8
XT530B1FBL2	8
XT530B1PAL2	8
XT530B1PCL2	8
XT530B1PCM12	8
XUZA118	12
XXZ12	12
XXZ30	12

Schneider Electric Industries SAS

Head Office
35, rue Joseph Monier
F-92500 Rueil-Malmaison
France

www.tesensors.com

The information provided in this documentation contains general descriptions and/or technical characteristics of the performance of the products contained herein. This documentation is not intended as a substitute for and is not to be used for determining suitability or reliability of these products for specific user applications. It is the duty of any such user or integrator to perform the appropriate and complete risk analysis, evaluation and testing of the products with respect to the relevant specific application or use thereof. Neither Schneider Electric nor any of its affiliates or subsidiaries shall be responsible or liable for misuse of the information contained herein.

Design: Schneider Electric
Photos: Schneider Electric

DIA4ED2170904EN