RAFIX 30 FS+, keylock switch, round collar, frontring stainless steel, 1 x 90°, shape L, latching, key removal position 0



fields of application

- Measurement-control-regulation
- Electrical engineering
- Mechanical and system engineering
- Vehicle construction
- Industrial robots

special features

- Standard key switch
- Elegant stainless steel front ring
- Low installation depth 15.7 mm (PCB) or 33.3 mm (QC)
- The short-stroke adapter allows MICON 5 tactile switches to be used as switching elements
- Connection types: PCB connection (PCB) or plug-in connection (QC)
- The PCB switching element minimize mounting errors
- Switching elements with silver contacts (max. 250 V/4 A) or gold contacts (max. 35 V/100 mA)
- Degree of protection: IP 65 on the front

description

RAFIX control devices are defined at RAFI as modular elements, consisting of an actuating element, if necessary a coupling and an individual contact or lighting unit.

Actuating elements (such as pushbuttons, emergency stop actuators, etc.) have the intended tactility, reset and function only when assembled with the appropriate switching elements.

The locking systems we use were created according to the DIN EN 1303 standard by well-known lock manufacturers. They are open, mechanical systems which, depending on the environmental conditions, require occasional maintenance (e.g. greasing & oiling) by the machine or system operator.

The locking systems we use have been created by reputable lock manufacturers in accordance with the DIN EN 1303 standard. They are open, mechanical systems that require occasional maintenance by the operator depending on the ambient conditions.

Further locking positions or functions are available on request.

technical data

general

Disassembly possible	no
Scope of delivery	2 keys
Front ring color	stainless steel

The information in this data sheet only contains general descriptions and / or performance features, which may not apply precisely as described to the respective application, and which my change due to further product enhancements. The technical data, illustrations and other information about our products are the mere results of individual technical testing. These descriptions and other product features are only binding if they expressly agreed upon at the time of the conclusion of a binding contract. In all other cases, we reserve the right to make technical changes as well as changes of availability. Pictures and other graphic illustrations are approximations only. All product names may be trademarks or brand names of the RAFI Group or any other sub-supplier of RAFI. The use of such by any third parties for their own purposes may infringe the rights of the respective entity holding those rights.

RAFI GmbH & Co. KG

Ravensburger Str. 128-134
88276 Berg / Ravensburg
Germany
www.rafi-group.com,
info.headquarters@rafi-group.com

Collar shape	round
Operating temperature, min.	-25 °C
Operating temperature, max.	70 °C
Storage temperature, min.	-40 °C
Storage temperature, max.	80 °C
illuminated	No
Packaging	Box
Packaging unit	2 pcs.
net weight	36.7 g
Operating life	50,000 cycles
B10	65,000 cycles
Degree of protection, front side, according to DIN EN 60529	IP65
UL Enclosure Type Rating front side	type 1 type 4X indoor
Environment resistance	IEC 60068-2-14 IEC 60068-2-30 IEC 60068-2-33 IEC 60068-2-78
Salt-spray resistance according to standard	IEC 60068-2-11
MOQ order	10 pcs.
RoHS compliant	Yes
REACH compliant	Yes

mounting diameters

Outside dimension, length	34.5 mm
Outside dimension, width	34.5 mm
Outside dimension, height	29.2 mm
Mounting hole	30.3 mm
Mounting depth	15.7 mm
Installation height	13.7 mm
Grid, min.	35 x 35 mm
Collar dimension	ø 34,5 mm

mechanical data

Actuation function	latching
Operating torque, max.	1.3 Nm
Locking position	019
Key removal position	0
Rotating angle	1 x 90°, shape L
Fixing	Threaded ring
Threaded ring torque, max.	1.2 Nm

direct links

RAFI eCatalog

The information in this data sheet only contains general descriptions and / or performance features, which may not apply precisely as described to the respective application, and which my change due to further product enhancements. The technical data, illustrations and other information about our products are the mere results of individual technical testing. These descriptions and other product features are only binding if they expressly agreed upon at the time of the conclusion of a binding contract. In all other cases, we reserve the right to make technical changes as well as changes of availability. Pictures and other graphic illustrations are approximations only. All product names may be trademarks or brand names of the RAFI Group or any other sub-supplier of RAFI. The use of such by any third parties for their own purposes may infringe the rights of the respective entity holding those rights.

RAFI GmbH & Co. KG

Ravensburger Str. 128-134
88276 Berg / Ravensburg
Germany
www.rafi-group.com,
info.headquarters@rafi-group.com

drawings

Dimensioned drawing

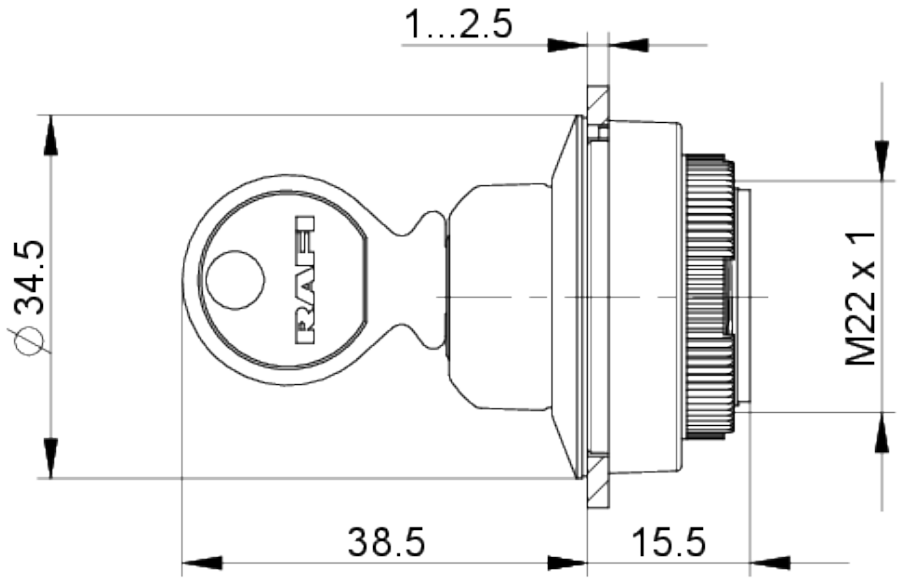

System drawing

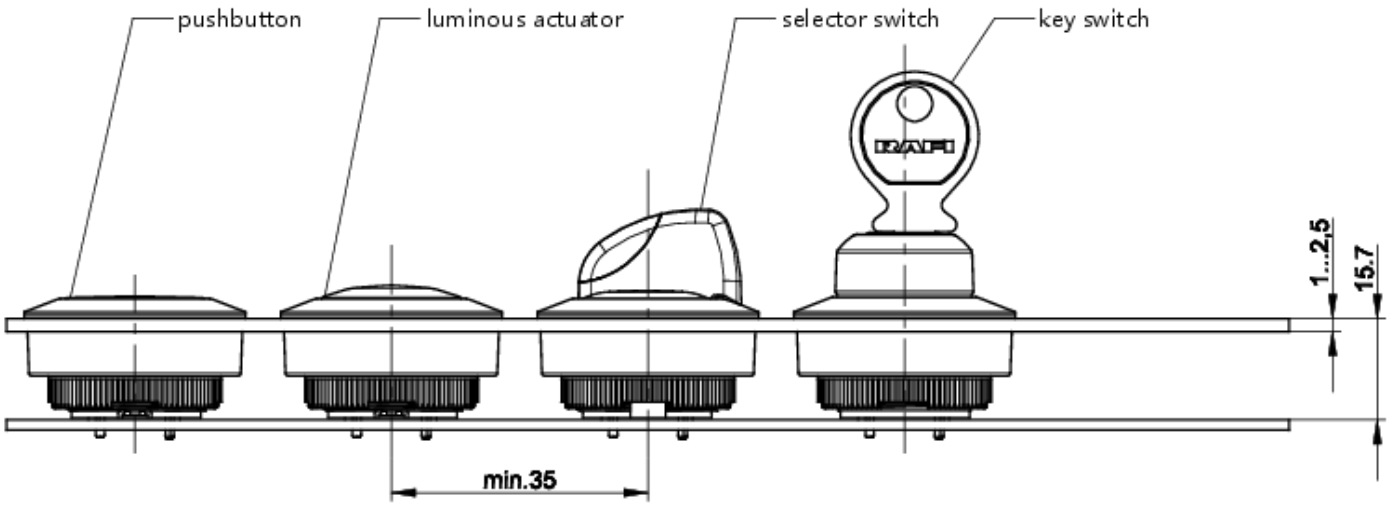

The information in this data sheet only contains general descriptions and / or performance features, which may not apply precisely as described to the respective application, and which my change due to further product enhancements. The technical data, illustrations and other information about our products are the mere results of individual technical testing. These descriptions and other product features are only binding if they expressly agreed upon at the time of the conclusion of a binding contract. In all other cases, we reserve the right to make technical changes as well as changes of availability. Pictures and other graphic illustrations are approximations only. All product names may be trademarks or brand names of the RAFI Group or any other sub-supplier of RAFI. The use of such by any third parties for their own purposes may infringe the rights of the respective entity holding those rights.

RAFI GmbH & Co. KG

Ravensburger Str. 128-134
88276 Berg / Ravensburg
Germany
www.rafi-group.com,
info.headquarters@rafi-group.com

Mounting hole drawing

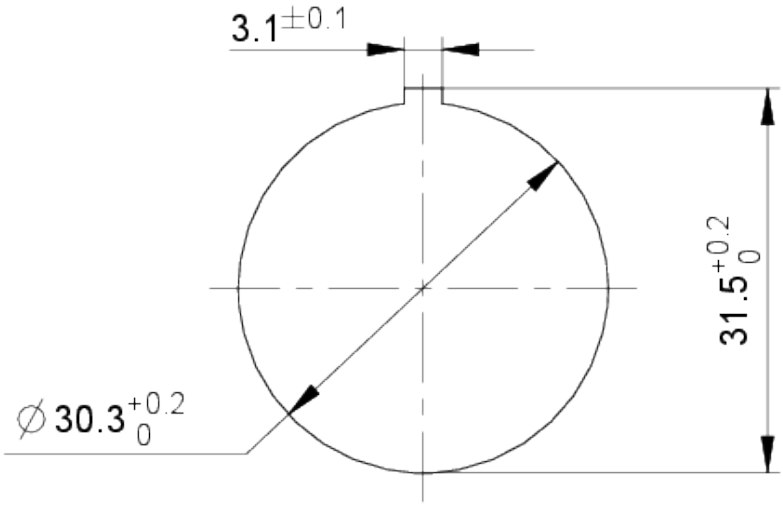

The information in this data sheet only contains general descriptions and / or performance features, which may not apply precisely as described to the respective application, and which my change due to further product enhancements. The technical data, illustrations and other information about our products are the mere results of individual technical testing. These descriptions and other product features are only binding if they expressly agreed upon at the time of the conclusion of a binding contract. In all other cases, we reserve the right to make technical changes as well as changes of availability. Pictures and other graphic illustrations are approximations only. All product names may be trademarks or brand names of the RAFI Group or any other sub-supplier of RAFI. The use of such by any third parties for their own purposes may infringe the rights of the respective entity holding those rights.

RAFI GmbH & Co. KG

Ravensburger Str. 128-134
88276 Berg / Ravensburg
Germany
www.rafi-group.com,
info.headquarters@rafi-group.com