MR0130

T-slot cylinder sensor with reed contact

MRT3038BBKOA/R/6M/ZH

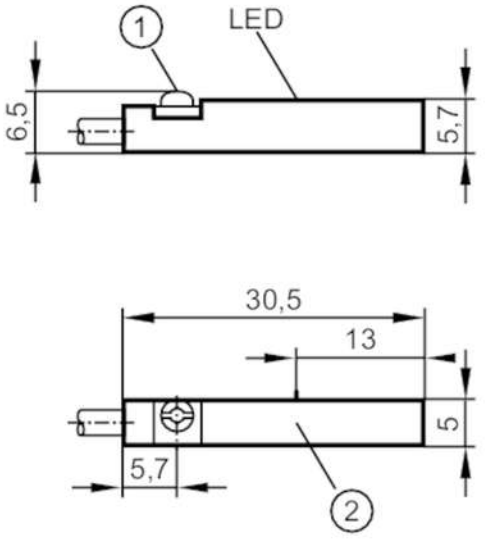

1 fastening clamp with combined slot / hexagon socket head hexagonal socket AF 1.5
2 Sensing face

Product characteristics		
Electrical design		PNP
Output function		normally open
Dimensions	[mm]	30.5 x 5 x 6.5
Electrical data		
Operating voltage	[V]	5...50 AC/DC; (External protective circuit for inductive load (valve, contactor, etc.) necessary.)
Protection class		III
Reverse polarity protection		yes
Reverse polarity protection		no
Outputs		
Electrical design		PNP
Output function		normally open
Max. voltage drop switching output DC	[V]	1
Max. voltage drop switching output AC	[V]	1
Permanent current rating of switching output AC	[mA]	350
Permanent current rating of switching output DC	[mA]	500
Switching frequency AC	[Hz]	1000
Switching frequency DC	[Hz]	1000
Max. switching power	[W]	10
Short-circuit protection		no
Short-circuit proof		no

MR0130

T-slot cylinder sensor with reed contact

MRT3038BBKOA/R/6M/ZH

Overload protection		no	
Detection zone			
Response sensitivity	[mT]	3.8	
Travel speed	[m/s]	10	
Accuracy / deviations			
Hysteresis	[mm]	1	
Repeatability	[mm]	< 0.2	
Response times			
Max. fall time	[ms]	0.1	
Max. make time incl. bounce	[ms]	0.6	
Operating conditions			
Ambient temperature	[°C]	-25...70	
Protection		IP 65; IP 67	
Tests / approvals			
EMC		EN 61000-4-2 ESD	- CD / 8 kV AD
		EN 61000-4-3 HF radiated	10 V/m
		EN 61000-4-4 Burst	2 kV
		EN 61000-4-6 HF conducted	10 V
		EN 55011	class B
UL approval		UL Approval no.	C004
Mechanical data			
Weight	[g]	71.5	
Mounting		flush mountable	
Cylinder type		T-slot cylinders	
Dimensions	[mm]	30.5 x 5 x 6.5	
Materials		PA; fastening clamp: stainless steel	
Switching cycles when connected to PLC	[Mio]	40	
Displays / operating elements			
Display		switching status	1 x LED, yellow
Electrical connection			
Required protection		miniature fuse to IEC60127-2 sheet 1; ≤ 0,75 A; fast acting; DC operation; ≤ 0,6 A; fast acting; AC operation	
Accessories			
Items supplied		rubber placeholder: 1	
		Cable clip: 1	
Remarks			
Pack quantity		1 pcs.	

MR0130

T-slot cylinder sensor with reed contact

MRT3038BBKOA/R/6M/ZH

Electrical connection

Cable: 6 m, PUR; 3 x 0.14 mm²

Connection

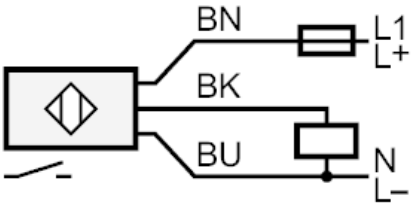

Note miniature fuse to IEC60127-2 sheet 1
≤ 0.75 A fast acting DC operation
≤ 0.6 A fast acting AC operation
Core colours :

BK =	black
BN =	brown
BU =	blue