efectorsoo

PG2451

PG-250-REB12-MFRKG/US/ /P

Pressure sensors

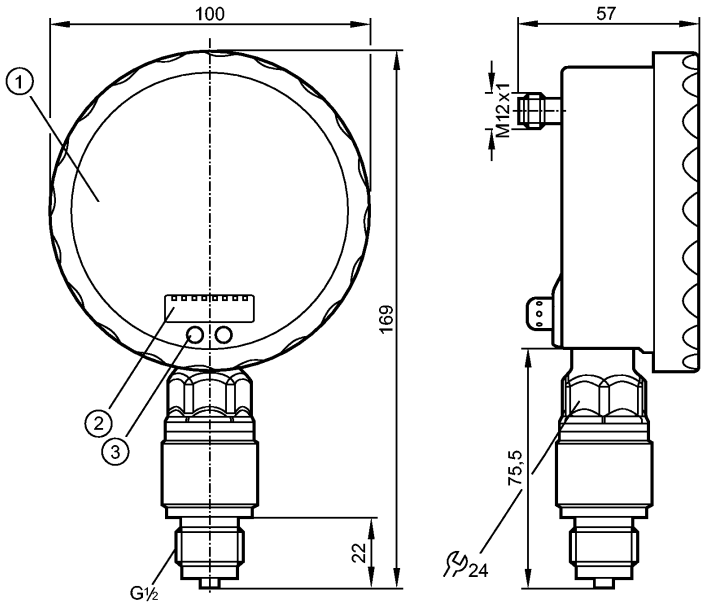

1: Analogue display
2: 4-digit alphanumeric display
3: Touch button (programming button)

Made in Germany

Product characteristics

Electronic pressure sensor with analogue display
Connector
Analogue display 0...350° rotatable
Resolution 0.25%
Pointer not visible when unit disconnected
Process connection: G ½
2 outputs OUT1 = switching output OUT2 = analogue output
analogue display, 4-digit alphanumeric display
Measuring range: 0...250 bar / 0...3625 psi

Application

Application		Type of pressure: relative pressure Liquids and gases Use in gases at pressures > 25 bar only after contacting the manufacturer ifm	
Pressure rating		600 bar	8700 psi
Bursting pressure min.		1000 bar	14500 psi
Medium temperature	[°C]	-25...80	

Electrical data

Electrical design		DC PNP/NPN
Operating voltage	[V]	18...32 DC
Current consumption	[mA]	70; (24 V)
Insulation resistance	[MΩ]	> 100 (500 V DC)
Protection class		III
Reverse polarity protection		yes

Outputs

efectorsoo

PG2451

PG-250-REB12-MFRKG/US/ /P

Pressure sensors

Output		2 outputs OUT1 = switching output OUT2 = analogue output	
Output function		1 x normally open / closed programmable + 1 x analogue (4...20 / 20...4 mA, scalable)	
Current rating	[mA]	250	
Voltage drop	[V]	< 2	
Short-circuit protection		pulsed	
Overload protection		yes	
Switching frequency	[Hz]	75	
Analogue output		I: 4...20 mA (Ineg: 20...4 mA)	
Max. load	[Ω]	I / Ineg: max. (Ub - 10 V) x 50	
Measuring / setting range			
Measuring range		0...250 bar	0...3625 psi
Setting range			
Set point, SP		1.0...400.0 bar	15...5800 psi
Reset point, rP		0.0...399.0 bar	0...5785 psi
Analogue start point, ASP		0.0...350.0 bar	0...5075 psi
Analogue end point, AEP		50.0...400.0 bar	725...5800 psi
in steps of		0.5 bar	5 psi
Accuracy / deviations			
Accuracy / deviations (in % of the span) Turn down 1:1			
Switch point accuracy		< ± 0.6	
Characteristics deviation *)		< ± 0.35 (BFSL) / < ± 0.6 (LS)	
Hysteresis		< ± 0.5	
Repeatability **)		< ± 0.1	
Long-term stability ***)		< ± 0.1	
Temperature coefficients (TEMPCO) in the temperature range 0...70° C (in % of the span per 10 K)			
Greatest TEMPCO of the zero point		< ± 0.3	
Greatest TEMPCO of the span		< ± 0.3	
Reaction times			
Power-on delay time	[s]	6	
Min. response time switching output	[ms]	9	
Damping for the switching output (dAP)	[s]	0.01...30	
Damping for the analogue output (dAA)	[s]	0.01...30	
Step response time analogue output	[ms]	28	
Integrated watchdog		yes	
Environment			
Ambient temperature	[°C]	-20...80	
Storage temperature	[°C]	-40...100	
Protection		IP 67 / IP 69K	
Tests / approvals			
EMC		EN 61000-4-2 ESD: EN 61000-4-3 HF radiated:	4 kV CD / 8 kV AD 10 V/m

	EN 61000-4-4 Burst: EN 61000-4-5 Surge: EN 61000-4-6 HF conducted:	2 kV 0.5/1 kV 10 V
Shock resistance	DIN IEC 68-2-27:	50 g (11 ms)
Vibration resistance	DIN IEC 68-2-6:	20 g (10...2000 Hz)
MTTF [Years]	100	

Mechanical data

Process connection	G ½
Materials (wetted parts)	ceramics (Al2 O3); FPM; stainless steel 316L / 1.4404
Housing materials	stainless steel 316L / 1.4404; PA; FPM (Viton); PTFE; viewing glass: laminated safety glass 4 mm
Switching cycles min.	100 million
Weight [kg]	0.613

Displays / operating elements

Display	Display unit Switching status Switch points Function display Measured values	2 x LED green LED yellow LED ring 4-digit alphanumeric display analogue display, 4-digit alphanumeric display
Extended display range (max.)	400 bar	5800 psi

Electrical connection

Connection	M12 connector; Gold-plated contacts

Wiring

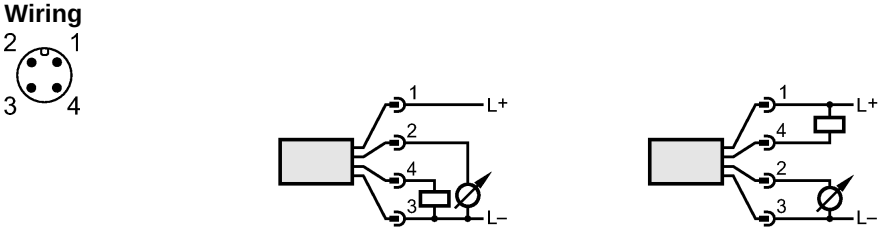

Remarks

Remarks	*) BFSL = Best Fit Straight Line switch point accuracy in the extended display range: 1.5 % of the span **) with temperature fluctuations < 10 K ***) in% of the span / 6 months
Pack quantity [piece]	1