E11287

Mounting base

MOUNTING BASE IME/3WIRE

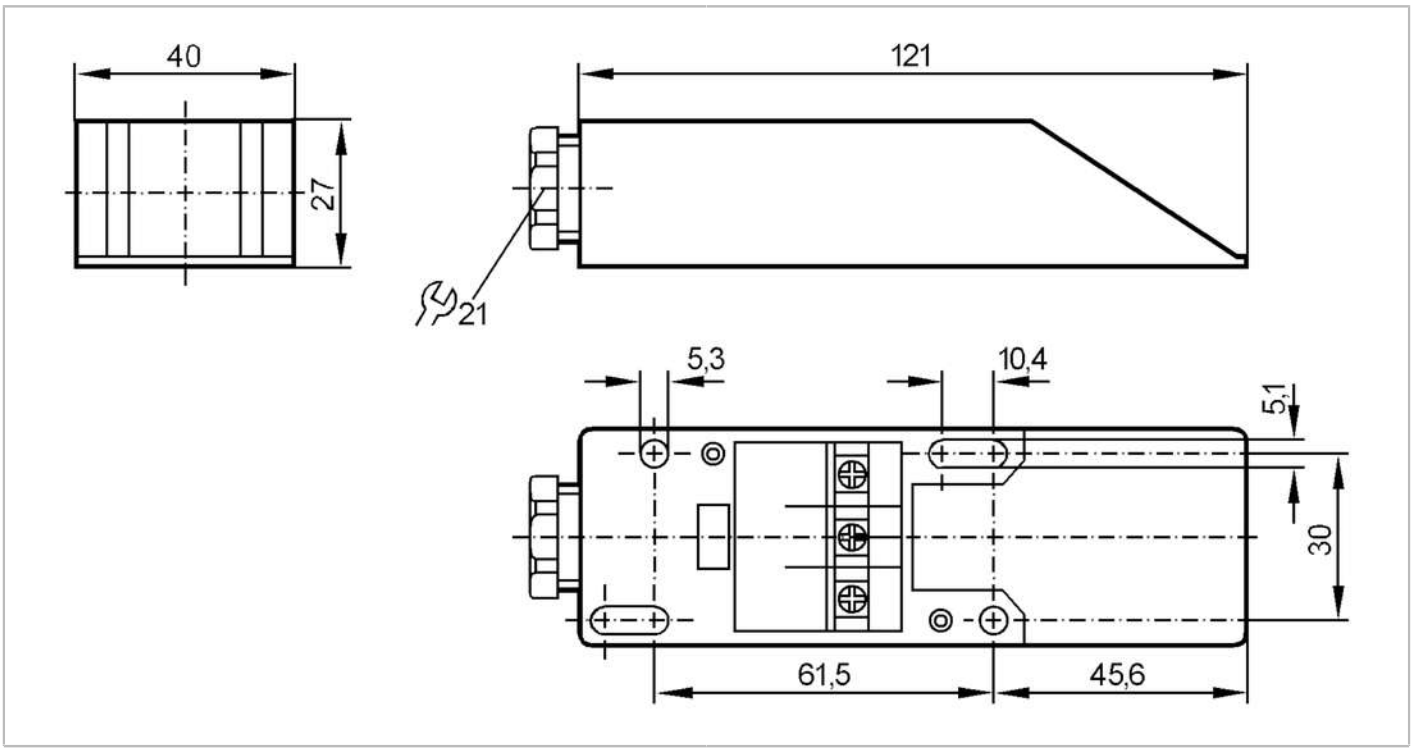

Mechanical data		
Weight	[g]	57
Materials		PPE

Remarks	
Pack quantity	1 pcs.

Electrical connection
terminals: ...2.5 mm²; Cable gland: M20 X 1.5